ON Semiconductor
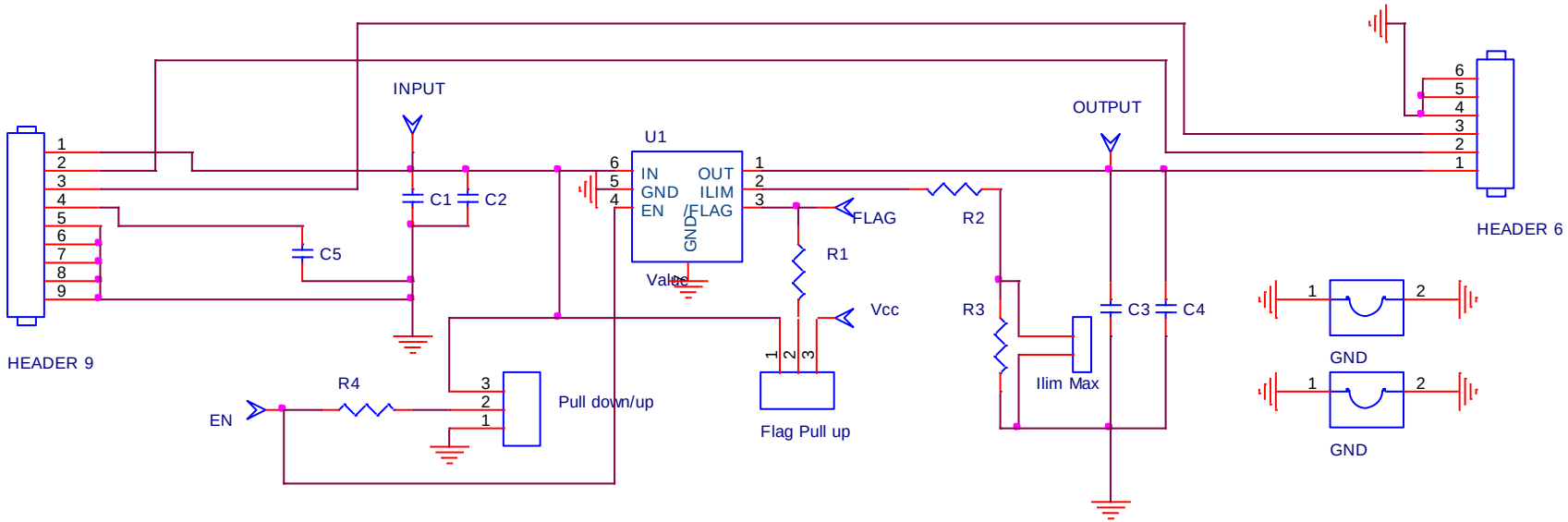
Schematic for the NCP380HMU05AGEVB Evaluation Board