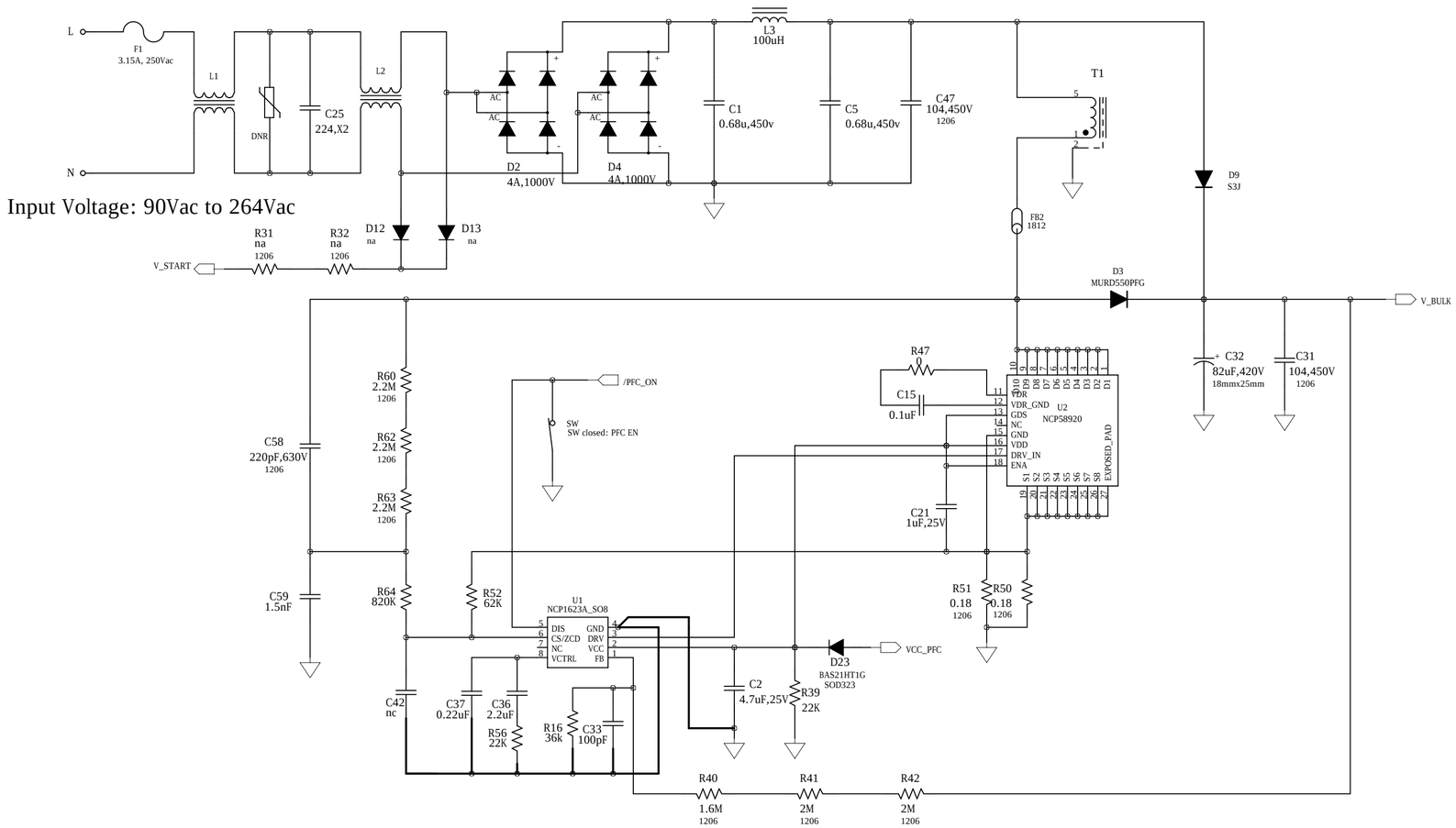

Title	NCP1623A_150W PFC with drain sense
Size	C
Number	PFC
Rev	A
Date	
Drawn by	David Dou
Engineer	
Filename	
Sheet	1 of 1

13:03:44