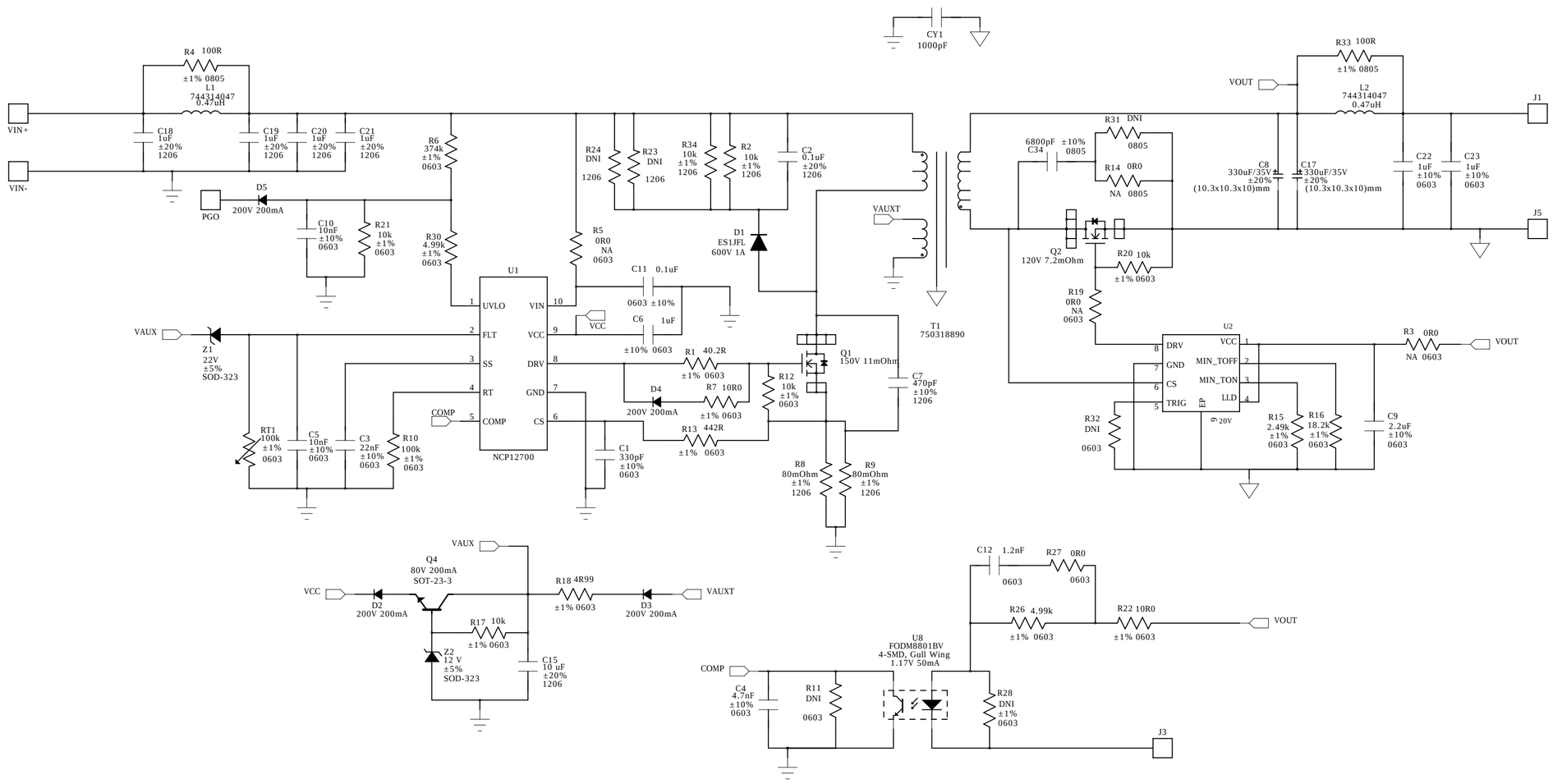
CY1
1000pF
R4 100R
±1% 0805
L1
744314047
0.47uH
VIN+
VIN-
C18
1uF
±20%
1206
C19
1uF
±20%
1206
C20
1uF
±20%
1206
C21
1uF
±20%
1206
R6
374k
±1%
0603
R24
DNI
1206
R23
DNI
1206
R34
10k
±1%
1206
R2
10k
±1%
1206
C2
0.1uF
±20%
1206
PGO
D5
200V 200mA
C10
10nF
±10%
0603
R21
10k
±1%
0603
R30
4.99k
±1%
0603
R5
0R0
NA
0603
D1
ES1JFL
600V 1A
VAUXT
T1
750318890
U1
UVLO
FLT
SS
RT
COMP
VIN
VCC
DRV
GND
CS
NCP12700
C11 0.1uF
0603 ±10%
C6 1uF
±10% 0603
VCC
VAUX
Z1
22V
±5%
SOD-323
R1 40.2R
±1% 0603
D4
200V 200mA
R7 10R0
±1% 0603
R12
10k
±1%
0603
Q1
150V 11mOhm
C7
470pF
±10%
1206
COMP
RT1
100k
±1%
0603
C5
10nF
±10%
0603
C3
22nF
±10%
0603
R10
100k
±1%
0603
R13 442R
±1% 0603
C1
330pF
±10%
0603
R8
80mOhm
±1%
1206
R9
80mOhm
±1%
1206
VOUT
R33 100R
±1% 0805
L2
744314047
0.47uH
J1
R31 DNI
0805
6800pF
C34
±10%
0805
R14 0R0
NA 0805
C8
330uF/35V
±20%
(10.3x10.3x10)mm
C17
330uF/35V
±20%
(10.3x10.3x10)mm
C22
1uF
±10%
0603
C23
1uF
±10%
0603
J5
Q2
120V 7.2mOhm
R20 10k
±1% 0603
R19
0R0
NA
0603
U2
DRV
GND
CS
TRIG
VCC
MIN_TOFF
MIN_TON
LLD
EP
9 20V
R3 0R0
NA 0603
VOUT
R32
DNI
0603
R15
2.49k
±1%
0603
R16
18.2k
±1%
0603
C9
2.2uF
±10%
0603

VAUX
Q4
80V 200mA
SOT-23-3
VCC
D2
200V 200mA
R18 4R99
±1% 0603
D3
200V 200mA
VAUXT
R17 10k
±1% 0603
Z2
12 V
±5%
SOD-323
C15
10 uF
±20%
1206
C12 1.2nF
0603
R27 0R0
0603
R26 4.99k
±1% 0603
R22 10R0
±1% 0603
VOUT
U8
FODM8801BV
4-SMD, Gull Wing
1.17V 50mA
COMP
C4
4.7nF
±10%
0603
R11
DNI
0603
R28
DNI
±1%
0603
J3