EVBUM2341/D

Implementing High Power Notebook Adapter Evaluation Board User's Manual

High Power Notebook Adapter with the NCP1399, NCP1602, NCP4305, NCP4354 and NCP4810

ON Semiconductor®

www.onsemi.com

EVAL BOARD USER'S MANUAL

Table 1. GENERAL PARAMETERS

Devices	Applications	Input Voltage	Output Power	Topology	Board Size
NCP1399 NCP1602 NCP4305 NCP4354 NCP4810	High Power NB Adapter	85 – 260 V_{AC}	150 W	CRM PFC & LLC	142 × 67.5 × 19.5 mm 13.16 W/inch^3
Output Voltage	**V_{OUT} Ripple**	**Efficiency**	**Operating Temperature**	**Cooling**	**Standby Power**
19.5 V/7.7 A (9 A Curr. Limit)	< 150 mV 3 to 7 A Load Steps	Above 91% @ I_{LOAD} > 2 A	0–50°C	Convection Open Frame	< 130 mW

Description

This evaluation board user's manual provides elementary information about a high efficiency, low no-load power consumption reference design that is targeting power laptop adapter or similar type of equipment that accepts 19.5 V_{DC} on the input.

The power supply implements PFC front stage to assure unity power factor and low THD, current mode LLC power stage to enhance transient response and secondary side synchronous rectification to maximize efficiency. This design focuses mainly on the NCP1399 current mode LLC controller description – please refer to NCP1602 and NCP4305 material to gain more information about these devices.

The NCP1399 is a current mode LLC controller which means that the operating frequency of an LLC converter is not controlled via voltage (or current) controlled oscillator but is directly derived from the resonant capacitor voltage signal and actual feedback level. This control technique brings several benefits compare to traditional voltage mode controllers like improved line and load transient response and inherent out of zero voltage switching protection. The LLC controller also features built-in high voltage startup and PFC operation control pins that ease implementation of a power supply with PFC front stage and no standby power supply on board.

The enhanced light lad operation of the LLC controller allows SMPS design to pass the latest no-load and light load consumption limits and still keeping output regulated with excellent transient response from no-load to full-load steps.

Key Features

- Wide Input Voltage Range
- Small Form Factor/High Power Density
- High Efficiency
- Low No-load Power Consumption
- Fast Startup
- X2 Capacitor Discharge Function
- Near Unity Power Factor
- Low Mains Operation Protection
- Overload Protection
- Secondary Short Circuit Protected
- Thermal Protection
- Regulated Output Under any Conditions
- Excellent Load and Line Transient Response
- Capability to Implement Off-mode for Extremely Low No-load Power Consumption

© Semiconductor Components Industries, LLC, 2016

Detail Demo-board Schematic Description

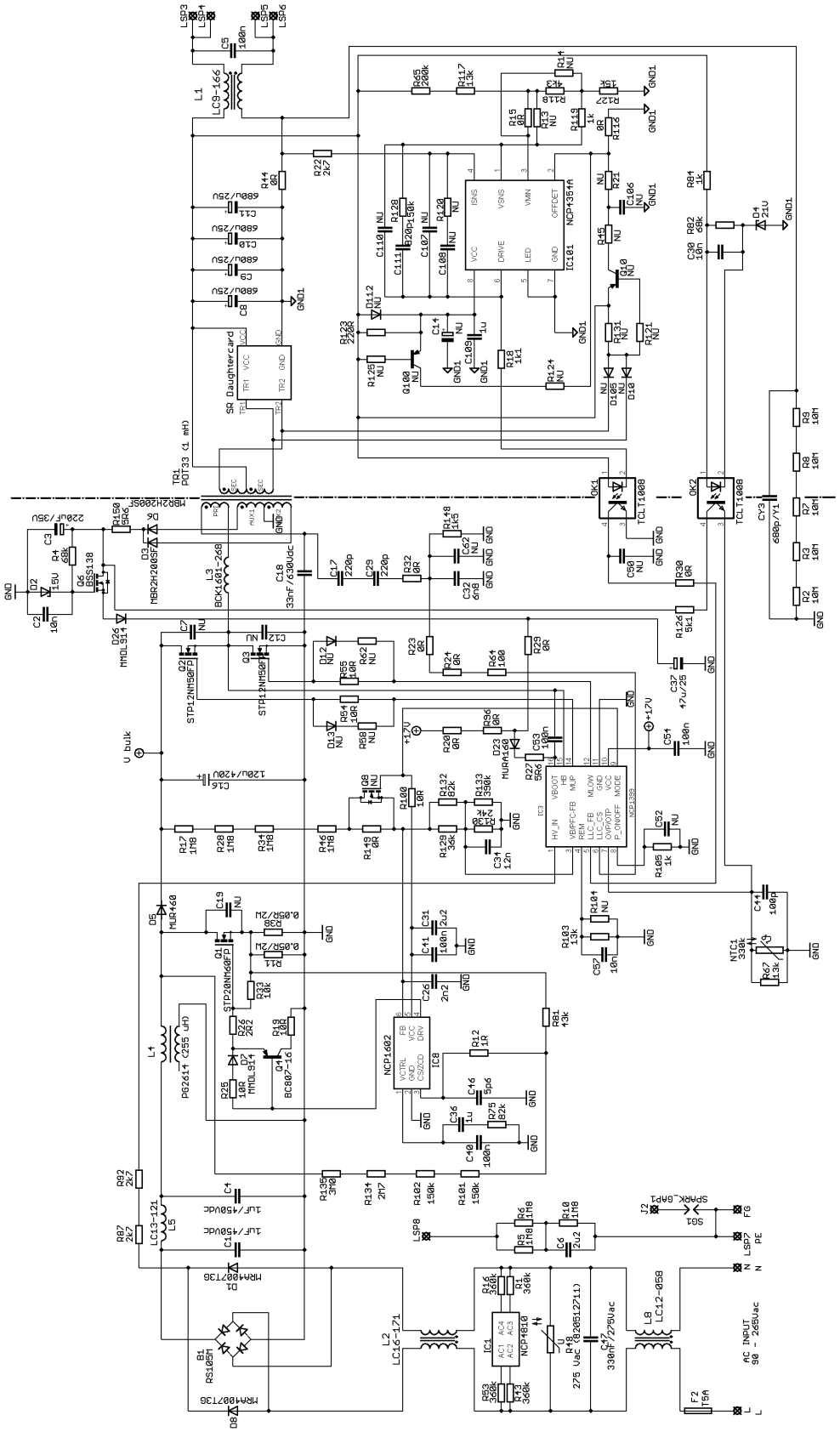

Figure 1. Laptop Adapter Demo-board − Main Board Schematic

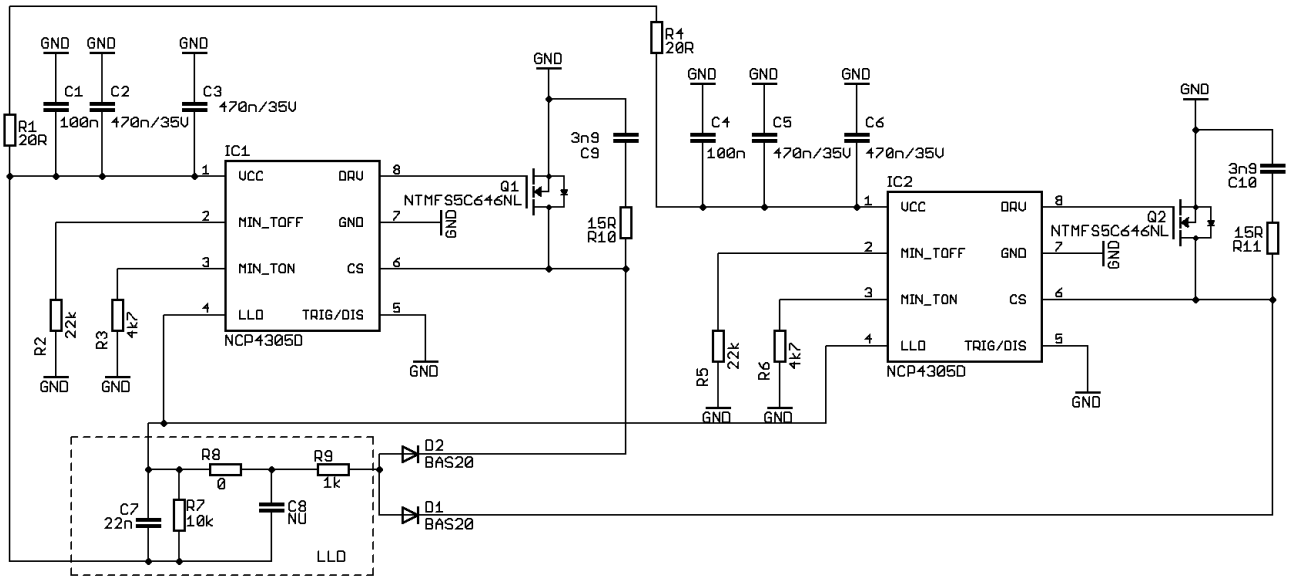

Figure 2. Laptop Adapter Demo-board – SR Daughtercard Schematic

The input EMI filter is formed by components L_8, L_2, L_5, C_{47}, C_1, C_4, C_6, R_5, R_6, R_{10} and R_{48}. The IC_1 (NCP4810) with safety resistors R_1, R_{16}, R_{43}, R_{53} is used to assure lose-less X2 capacitor discharge function after application is disconnected from the mains.

The PFC power stage uses standard boost PFC topology formed by power components B_1, L_1, D_5, Q_1, R_{11}, R_{38}, and bulk capacitor C_{16}. The PFC controller IC_8 (NCP1602) senses input voltage indirectly – via PFC power MOSFET drain voltage sensing network R_{135}, R_{134}, R_{102} and R_{101}. The PFC coil current is sensed by the shunt resistors R_{11} and R_{38}. The series resistor R_{81} defines maximum PFC front stage peak current. The PFC feedback divider is shared with LLC brown-out sensing network in order to reduce application no-load power consumption. The PFC FB/LLC BO divider is formed by resistors R_{17}, R_{28}, R_{34}, R_{46}, R_{129}, R_{130}, R_{132}, R_{133} and R_{149}. The FB signal is filtered by capacitor C_{26} to overcome possible troubles caused by the parasitic capacitive coupling between pin and other nodes that handle high dV/dt signals. The internal bulk voltage regulator compensation C_{40}, C_{36} and R_{75} is connected to the IC_8 pin 1. The PFC MOSFET is driven via circuitry R_{19}, R_{25}, R_{26}, R_{33}, D_7 and Q_4. This solution allows to select needed turn-on and turn-off process speed for Q_1 and also to handle gate discharge current in local loop – minimizing EMI caused by the driver loop.

The LLC power stage primary side composes from these devices: MOSFETs Q_2, Q_3, external resonant coil L_3, transformer TR_1 and resonant capacitor C_{18}. The IC_3 (NCP1399Ax) LLC controller senses primary current indirectly – via resonant capacitor voltage monitoring which is divided down by capacitive divider R_{32}, C_{17}, C_{29}, C_{32} and C_{62}. The capacitive divider has to provide minimum phase shift between resonant capacitor signal and divided signal on the LLC_CS pin. The capacitive divide has to be loaded in the same time to assure fast LLC_CS pin signal stabilization after application startup – this is achieved by resistor R_{148}. The series resistor R_{23}, R_{24}, and R_{64} is used to limit maximum current that can flow into the LLC_CS pin. The FB optoucoupler OK_1 is connected to the LLC_FB pin and defines converter output by pulling down this pin when lower output power is needed. Capacitor C_{50} forms high frequency pole in FB loop characteristics and helps to eliminate eventual noise that could be coupled to the FB pin by parasitic coupling paths. The Brow-Out resistor sensing network was already described in PFC section as it is shared with PFC feedback sensing. The Skip/REM pin of the NCP1399 is used for skip threshold adjustment in this demo-board option. Resistors R_{103} and R_{104} are used for this purpose together with noise filtering capacitor C_{57}. The over-voltage and over-temperature protections are implemented via OVP/OTP pin by using resistor R_{67}, temperature dependent resistor NTC1, filtering capacitor C_{44} and optocoupler OK_2. The OVP comparator is located on the secondary side to assure maximum OVP circuitry accuracy. The PFC ON/OFF function is not used in this revision of demo-board – i.e. the bulk voltage is regulated to nominal level during entire board operation (full, medium, light or no-load conditions) thus the P_ON/OFF pin is connected to ground via resistor R_{105}. The PFC_MODE pin provides bias to the PFC controller via series resistor R_{100} after high enough voltage is available on the LLC VCC capacitors C_{37}. The VCC decoupling capacitor C_{54} and also bootstrap capacitor for high side driver powering C_{53} are located as close to the LLC controller package as possible to minimize parasitic inductive coupling to other IC adjust components due to high driver current peaks that are present in the circuit during drivers rising and falling edges transitions. The bootstrap capacitor is charged via HV bootstrap diode D_{23} and series resistor R_{96} which limits

charging current and V_{boot} to HB power supply slope during initial C_{53} charging process. The gate driver currents are reducer by added series resistors R_{54}, R_{55} to optimize EMI signature of the application.

The primary controllers bias voltage limiter circuitry is used in order to restrict upper value of the primary V_{CC} voltage to approximately 13 V. The VCC limiter composes of these components: resistors R_4, R_{150}, capacitors C_2, C_3, diodes D_3, D_2, D_6, D_{26} and transistor Q_6.

The secondary side synchronous rectification is located on separated Daughter-card and uses IC_1 and IC_2 SR controllers – NCP4305D. The SR MOSFTEs for each SR channel are Q_1 and Q_2. RC snubber circuits C_9, R_1, C_{10} and R_{11}, are used to damp down the parasitic ringing and thus limit the maximum peak voltage on the SR MOSFETs. The SR controllers are supplied from converter output via resistors R_1 and R_4. These resistors form RC filter with decoupling capacitors C_1 to C_6. The minimum on-time – R_3, R_6 and minimum off-time – R_2, R_5 resistors define needed blanking periods that help to overcome SR controllers false triggering to ringing in the SR power stage. The light load detection circuit (LLD) is formed by resistors R_7, R_8, R_9 capacitor C_7, C_8, and diodes D_1, D_2. The SR controllers are disabled by LLD circuitry when application enters skip mode – this helps to reduce no-load power consumption of application. The trigger/disable function of NCP4305 is not used in this application thus the corresponding pins are grounded.

The output voltage of the converter is regulated by Secondary Side Sleep mode Controller NCP4354A – IC_{101}. The regulation optocoupler OK_1 is driven via resistor R_{18} which defines loop gain. The NCP4354 is biased via resistor R_{123} with decoupling capacitor C_{109}. The output voltage is adjusted by divider R_{65}, R_{117}, R_{118}, R_{127} and R_{119}. The feedback loop compensation network is formed partially by these components, resistor R_{128} and capacitor C_{111}. The output filtering capacitor bank composes from low ESR capacitors C_8 to C_{11}. Output filter L_1, C_5 is used to clean out output voltage from switching glitches.

The secondary side OVP sense circuitry is using zener diode D_4, resistors R_{82}, R_{84} and capacitor C_{30}. The OVP threshold is adjusted by selected type of zener diode.

There are several options prepared in the PCB layout so that customer can modify demo-board according to his target application needs. Mentioned options for instance allow implementation of off-mode control from secondary side to further reduce no-load power consumption or different PFC front stage controller implementation.

Circuit Layout

The PCB consists of a single layer FR4 board with 35 μm copper cladding.

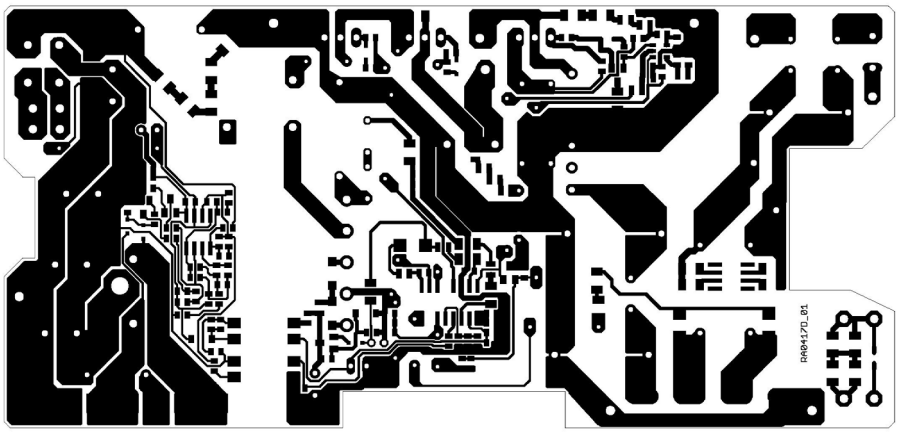

Figure 3. Main Board Bottom Layer

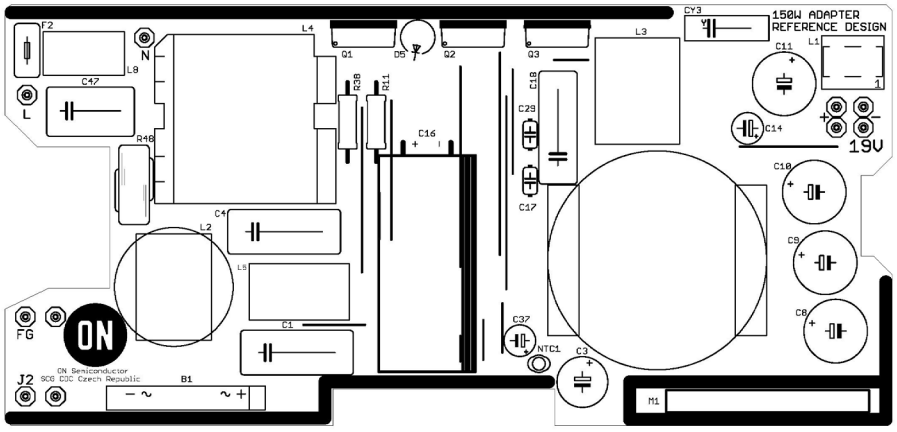

Figure 4. Main Board Top Side Components

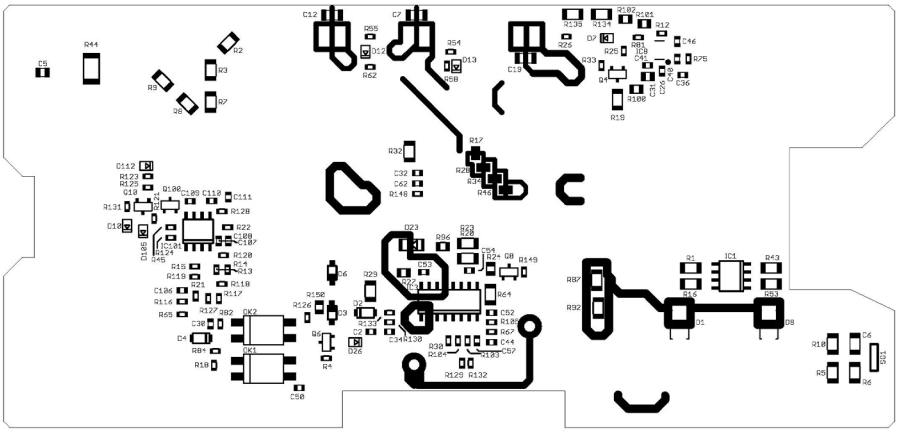

Figure 5. Main Board Bottom Side Components

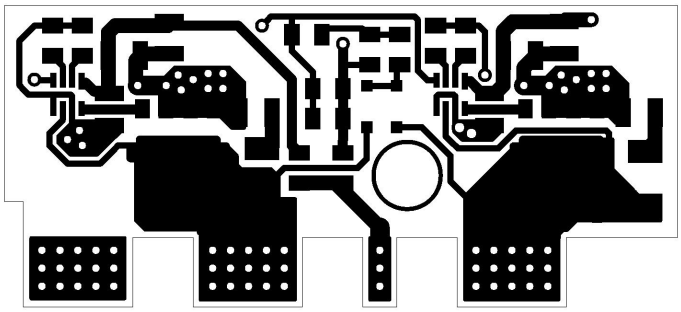

Figure 6. SR Daughtercard Board Top Layer

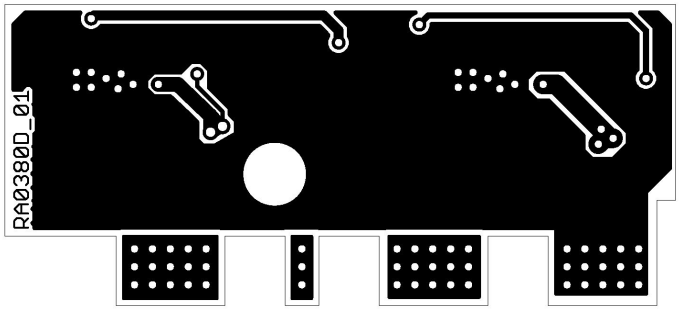

Figure 7. SR Daughtercard Board Bottom Layer

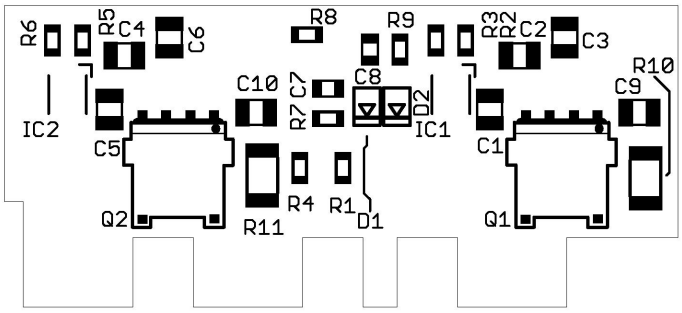

Figure 8. SR Daughtercard Board Top Side Components

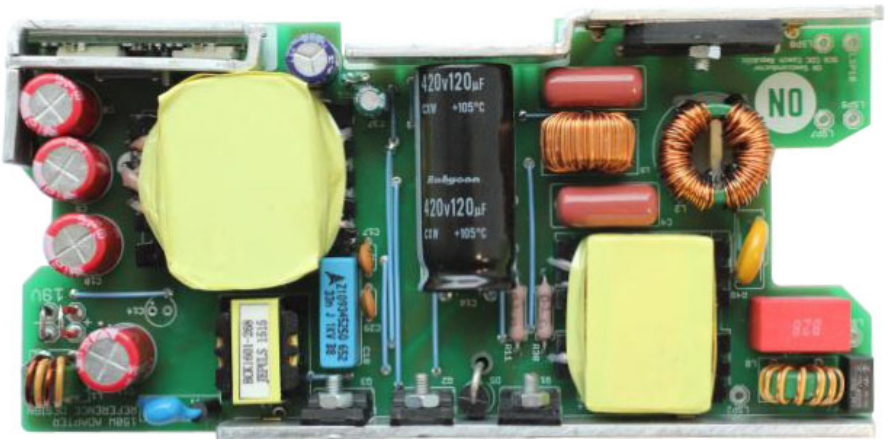

Figure 9. Main Board Photo – Top Side

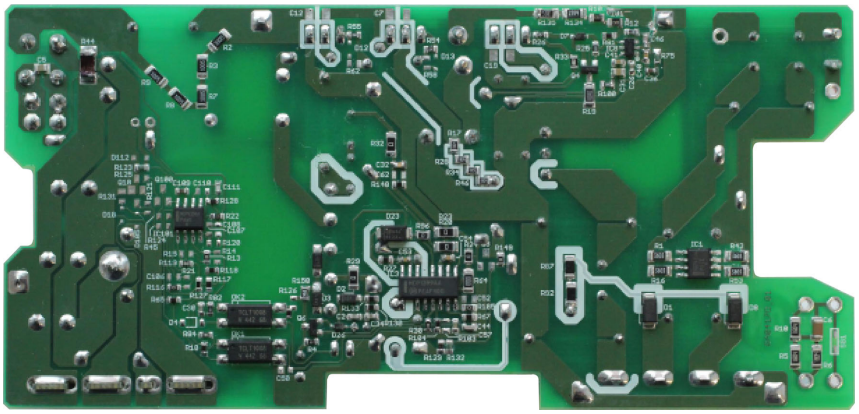

Figure 10. Main Board Photo – Bottom Side

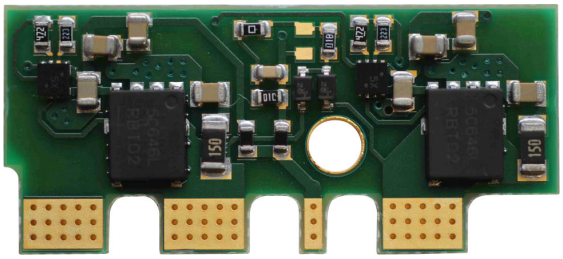

Figure 11. SR Daughtercard Board Photo – Top Side

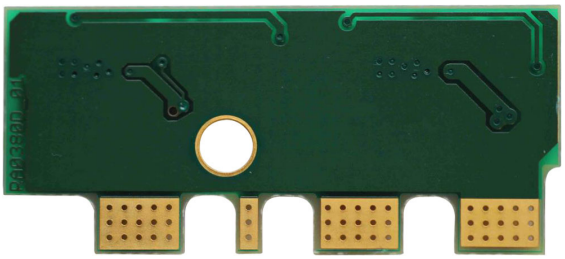

Figure 12. SR Daughtercard Board Photo – Bottom Side

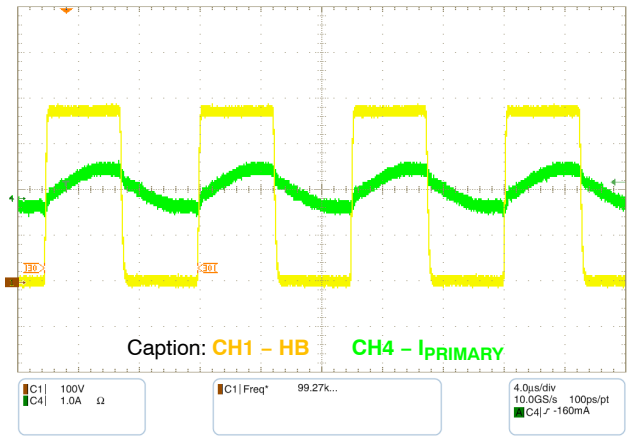

Figure 13. Steady Stage – I_{LOAD} = 2 A

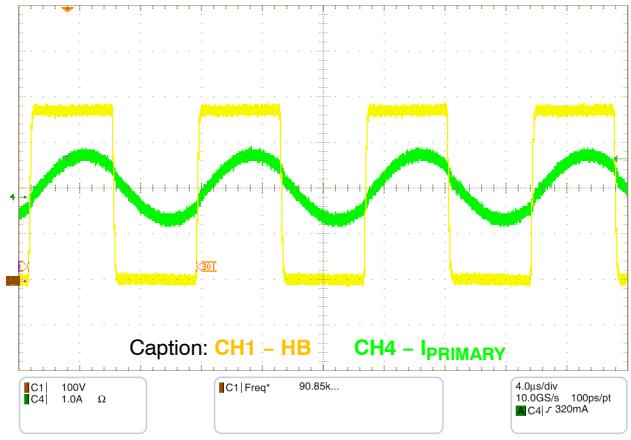

Figure 14. Steady Stage – I_{LOAD} = 4 A

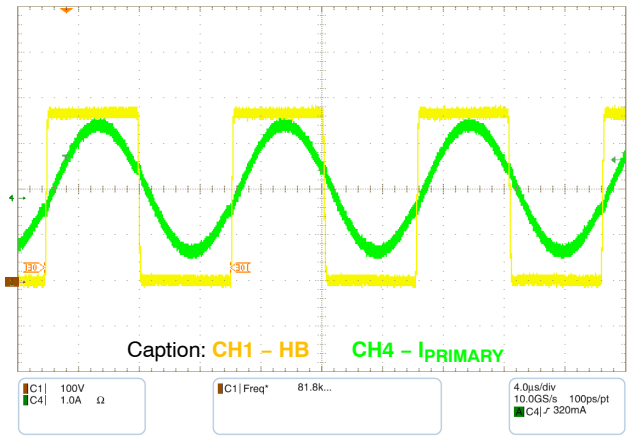

Figure 15. Steady Stage – I_{LOAD} = 8 A

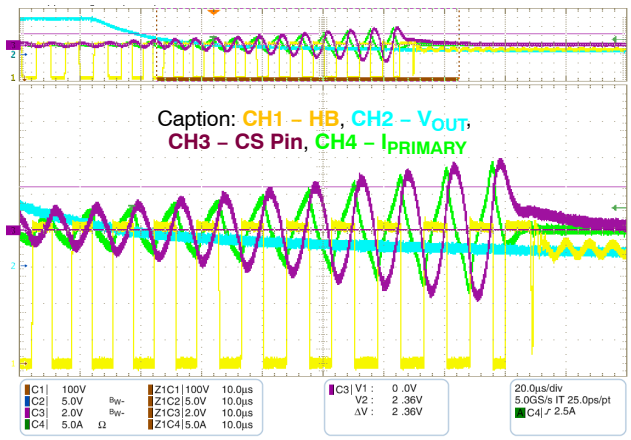

Figure 16. Secondary Short Transition

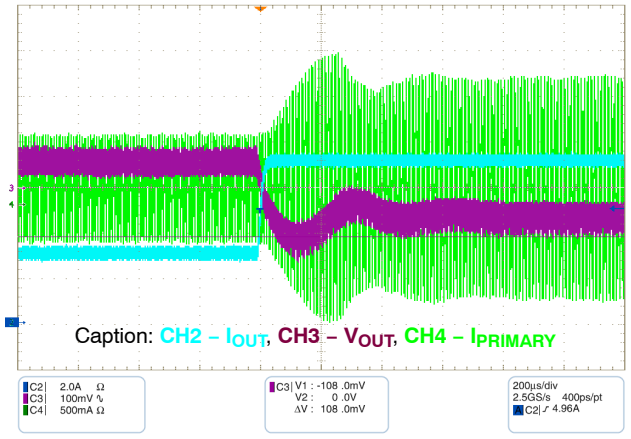

Figure 17. Transition Response – Load Step from 3 to 7 A

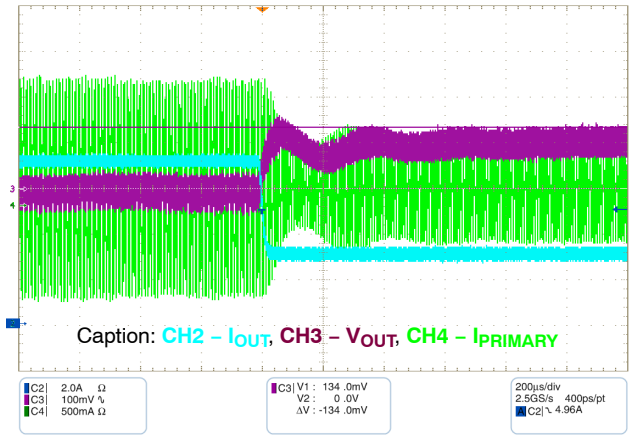

Figure 18. Transition Response – Load Step from 7 to 3 A

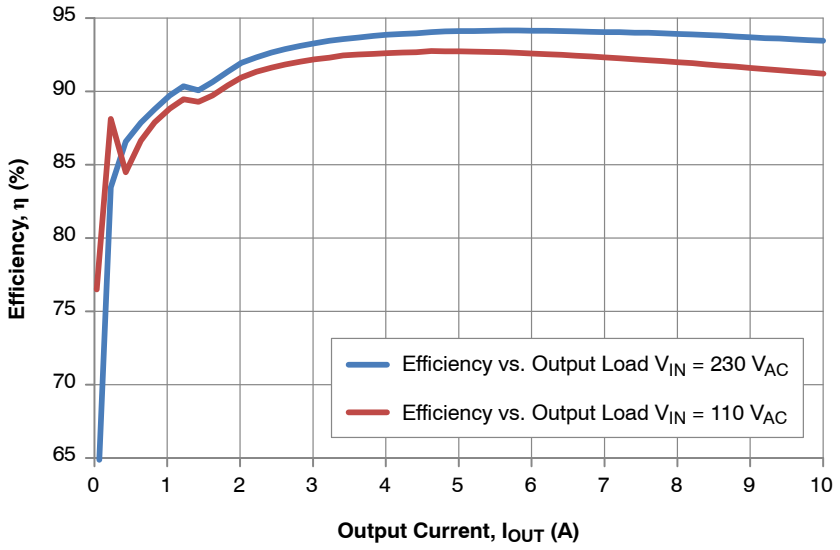

Figure 19. Board Efficiency – Including PFC Stage

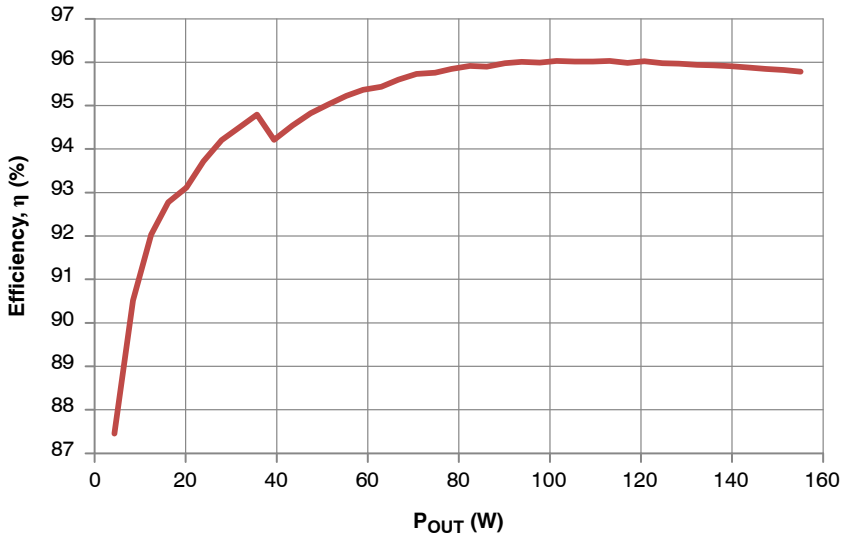

Figure 20. Board Power Stage with SR Efficiency V_{IN} = 385 V_{DC}

Table 2. NO-LOAD INPUT POWER CONSUMPTION

Input Voltage	Power Consumption
110 V_{AC}	114 mW
230 V_{AC}	123 mW

Table 3. BILL OF MATERIALS

Parts	Qty	Description	Value	Tolerance	Footprint	Manufacturer	Manufacturer Part Number	Substitution Allowed
B1	1	Bridge Rectifier	KBJ608G	–	KBJ608G	Diodes Incorporated	KBJ608G	Yes
C1, C4	2	MKP Film Capacitors	1 μF/450 V_{DC}	10%	Through Hole	Panasonic	667−ECW−FD2W105J4	Yes
C111	1	Ceramic Capacitor	820 pF	10%	0603	Kemet	C0603C821K3RACTU	Yes
C14	1	Electrolytic Capacitor	NU	–	Through Hole	–	–	Yes
C16	1	Electrolytic Capacitor	120 μF/420 V	20%	Through Hole	Rubycon	420CXW120MEFR16x35	Yes
C17, C29	2	Ceramic Capacitor	220 pF/1 kV	20%	Through Hole	Vishay	S221M39SL0N63K7R	Yes
C18	1	Film Capacitors	33 nF/1 kV_{DC}	5%	Through Hole	EPCOS/TDK	B32652A0333J000	Yes
C2, C30, C57	3	Ceramic Capacitor	10 nF	10%	0603	Kemet	C0603C103K3RACTU	Yes
C26	1	Ceramic Capacitor	2.2 nF	10%	0603	Kemet	C0603C222K3RACTU	Yes
C3	1	Electrolytic Capacitor	220 μF/35 V	20%	Through Hole	PANASONIC	EEU−FM1V221L	Yes
C31	1	Ceramic Capacitor	2.2 μF/25 V	10%	0805	Kemet	C0805C225K3RAC7800	Yes
C32	1	Ceramic Capacitor	6.8 nF	10%	0603	Kemet	C0603C682K3RACTU	Yes
C34	1	Ceramic Capacitor	12 nF	10%	0603	Kemet	C0603C123K3RACTU	Yes
C36, C109	2	Ceramic Capacitor	1 μF	10%	0603	Kemet	C0603C105K3RACTU	Yes
C37	1	Electrolytic Capacitor	47 μ/25 V	20%	Through Hole	PANASONIC	ECA−1EHG470	Yes
C40, C41, C53, C54	4	Ceramic Capacitor	100 nF	10%	0603	Kemet	C0603C104K3RACTU	Yes
C44	1	Ceramic Capacitor	100 pF	10%	0603	Kemet	C0603C101K3RACTU	Yes
C46	1	Ceramic Capacitor	5.6 pF	10%	0603	Kemet	C0603C150K5GACTU	Yes
C47	1	MKP Film Capacitors	330 nF/ 310 V_{AC}	10%	Through Hole	Würth Elektronik	890334024003	Yes
C5	1	Ceramic Capacitor	100 nF	10%	0805	Kemet	C0805C104K5RACTU	Yes
C50, C52, C62, C106, C107, C108, C110	7	Ceramic Capacitor	NU	–	0603	–	–	Yes
C6	1	Ceramic Capacitor	2.2 μF	10%	1206	Kemet	C1206C222K5RACTU	Yes
C7, C12, C19	3	Ceramic Capacitor	NU	–	1206	–	–	Yes
C8, C9, C10, C11	4	Electrolytic Capacitor	680 μ/25 V	20%	Through Hole	Würth Elektronik	860020475016	Yes
CY3	1	Ceramic Capacitor	680 pF/Y1	10%	Through Hole	Murata	DE1B3KX681KN4AP01F	Yes
D1, D8	2	Power Rectifier Diode	MRA4007	–	SMA	ON Semiconductor	MRA4007T3G	No
D10, D12, D13, D105, D112	5	Diode	NU	–	SOD323	–	–	Yes
D2	1	Zener Diode	15 V	5%	SOD−123	ON Semiconductor	MMSZ15T1G	No
D23	1	Ultrafast Power Rectifier Diode	MURA160	–	SMA	ON Semiconductor	MURA160T3G	No
D3, D6	2	Schottky Power Rectifier Diode	MBR2H200SF	–	SOD−123	ON Semiconductor	MBR2H200SFT3G	No
D4	1	Zener Diode	15 V	5%	SOD−123	ON Semiconductor	MMSZ22T1G	No
D5	1	Ultra-Fast Recovery	MUR460	–	TO−220 (2 LEAD)	ON Semiconductor	MUR460RLG	No
D7, D26	2	Switching Diode	MMDL914	–	SOD323	ON Semiconductor	MMDL914T1G	No
F2	1	FUSE	T4A	–	Through Hole	Bussmann/Eaton	SS−5H−4A−BK	Yes
IC1	1	X2 Capacitor Discharger	NCP4810	–	SOIC−8	ON Semiconductor	NCP4810DR2G	No
IC101	1	Secondary Side Sleep Mode Controller	NCP4354A	–	SOIC−8	ON Semiconductor	NCP4354ADR2G	No
IC3	1	Resonant Mode Controller	NCP1399	–	SOIC−16	ON Semiconductor	NCP1399__DR2G	No
IC8	1	Power Factor Controller	NCP1602	–	TSOP−6	ON Semiconductor	NCP1602DCCSNT1G	No
L1	1	Inductor	LC9−166	20%	T10*6*5C K08	JEPULS	LC9−166 (150311600)	Yes
L2	1	Emi Filter	LC16−171	20%	T16*12*8C	JEPULS	LC16−171 (150311400)	Yes
L3	1	Resonant Inductor	BCK1601−268	10%	EE16/12/7	JEPULS	BCK1601−268 (150040300)	Yes

Table 3. BILL OF MATERIALS (continued)

Parts	Qty	Description	Value	Tolerance	Footprint	Manufacturer	Manufacturer Part Number	Substitution Allowed
L4	1	PFC Inductor	PG2614 (255 μH)	10%	PQ2614	Global Choice International LLC	6142516090	Yes
L5	1	Emi Filter	LC13−121	20%	T50−26B	JEPULS	LC13−121 (150311500)	Yes
L8	1	Emi Filter	LC12−058	20%	T12*6*4C	JEPULS	LC12−058 (150311300)	Yes
M1	1	SR Daughtercard	−	−	−	ON Semiconductor	−	NO
NTC1	1	Thermistor	330 kΩ	−	Through Hole	Vishay	NTCLE100E3334JB0	Yes
OK1, OK2	2	Opto Coupler	TCLT1008		DIL4−SMD	Vishay	TCLT1008	Yes
Q1	1	N-Channel Power MOSFET	STP20NM60FP	−	TO−220	ST Microelectronics	STP20NM60FP	Yes
Q10, Q100	2	PNP Transistror	NU	−	SOT−23	−	−	Yes
Q2, Q3	2	N-Channel Power MOSFET	STP12NM50FP	−	TO−220	ST Microelectronics	STP12NM50FP	Yes
Q4	1	PNP General Purpose Transistor	BC807	−	SOT−23	ON Semiconductor	BC807−16LT1G	No
Q6	1	N-Channel Small Signal MOSFET	BSS138	−	SOT−23	ON Semiconductor	BSS138LT1G	No
Q8	1	N-Channel MOSFET	NU	−	SOT−23	−	−	Yes
R1, R16, R43, R53	4	Resistor SMD	360 kΩ	1%	1206	Rohm Semiconductor	MCR18ERTJ364	Yes
R100	1	Resistor SMD	10 Ω	1%	0805	Rohm Semiconductor	MCR10EZPF10R0	Yes
R101, R102	2	Resistor SMD	150 kΩ	1%	0805	Rohm Semiconductor	MCR10EZPF1503	Yes
R11, R38	2	Power Resistor	0.05 Ω/2 W	1%	Through Hole	WLCR050FET	Ohmite	Yes
R118	1	Resistor SMD	4.3 kΩ	1%	0603	Rohm Semiconductor	MCR03ERTF4301	Yes
R12	1	Resistor SMD	1 Ω	1%	0603	Rohm Semiconductor	MCR03ERTFL1R00	Yes
R123	1	Resistor SMD	220 Ω	1%	0603	Rohm Semiconductor	MCR03ERTF2200	Yes
R126	1	Resistor SMD	5.1 kΩ	1%	0603	Rohm Semiconductor	MCR03ERTF5101	Yes
R127	1	Resistor SMD	15 kΩ	1%	0603	Rohm Semiconductor	MCR03ERTF1502	Yes
R128	1	Resistor SMD	150 kΩ	1%	0603	Rohm Semiconductor	MCR03ERTF1503	Yes
R129	1	Resistor SMD	36 kΩ	1%	0603	Rohm Semiconductor	MCR03ERTF3602	Yes
R13, R30, R116, R149	4	Resistor SMD	0 Ω	1%	0603	Rohm Semiconductor	MCR03EZPJ000	Yes
R130	1	Resistor SMD	24 kΩ	1%	0603	Rohm Semiconductor	MCR03ERTF2402	Yes
R133	1	Resistor SMD	390 kΩ	1%	0603	Rohm Semiconductor	MCR03ERTF3903	Yes
R134	1	Resistor SMD	2.7 MΩ	5%	1206	Rohm Semiconductor	MCR18ERTJ275	Yes
R135	1	Resistor SMD	3 MΩ	5%	1206	Rohm Semiconductor	MCR18ERTJ305	Yes
R14, R15, R21, R45, R58, R62, R104, R120, R121, R124, R125, R131	12	Resistor SMD	NU	−	0603	−	−	Yes
R148	1	Resistor SMD	1.5 kΩ	1%	0603	Rohm Semiconductor	MCR03ERTF1501	Yes
R17, R28, R34, R46	4	Resistor SMD	1.8 MΩ	5%	0805	Rohm Semiconductor	MCR25JZHJ185	Yes
R18	1	Resistor SMD	1.1 kΩ	1%	0603	Rohm Semiconductor	MCR03ERTF1101	Yes
R19	1	Resistor SMD	10 Ω	1%	1206	Rohm Semiconductor	MCR18ERTJ100	Yes
R2, R3, R7, R8, R9	5	Resistor SMD	10 MΩ	5%	1206	Rohm Semiconductor	MCR18ERTJ106	Yes
R20, R23, R29, R32	4	Resistor SMD	0 Ω	−	1206	Rohm Semiconductor	MCR18EZHJ000	Yes

Table 3. BILL OF MATERIALS (continued)

Parts	Qty	Description	Value	Tolerance	Footprint	Manufacturer	Manufacturer Part Number	Substitution Allowed
R22	1	Resistor SMD	2.7 kΩ	1%	0603	Rohm Semiconductor	MCR03ERTF2701	Yes
R24, R96	2	Resistor SMD	0 Ω	–	0805	Rohm Semiconductor	MCR10EZPJ000	Yes
R25, R54, R55	3	Resistor SMD	10 Ω	1%	0603	Rohm Semiconductor	MCR03ERTF10R0	Yes
R26	1	Resistor SMD	2.2 Ω	5%	0603	Rohm Semiconductor	MCR03ERTJ2R2	Yes
R27, R150	2	Resistor SMD	5.6 Ω	5%	0805	Rohm Semiconductor	MCR10EZHJ5R6	Yes
R33	1	Resistor SMD	10 kΩ	1%	0603	Rohm Semiconductor	MCR03ERTF1002	Yes
R4, R82	2	Resistor SMD	68 kΩ	1%	0603	Rohm Semiconductor	MCR03ERTF6802	Yes
R44	1	Resistor SMD	0 Ω	–	Wire Strap	–	–	Yes
R48	1	VARISTOR	275 V_{AC}	1%	Through Hole	Würth Elektronik	820512711	Yes
R5, R6, R10	3	Resistor SMD	1.8 MΩ	5%	0805	Rohm Semiconductor	MCR25JZHJ185	Yes
R64	1	Resistor SMD	100 Ω	1%	1206	Rohm Semiconductor	MCR18ERTF1000	Yes
R65	1	Resistor SMD	200 kΩ	1%	0603	Rohm Semiconductor	MCR03ERTF2003	Yes
R67, R103, R117	3	Resistor SMD	13 kΩ	1%	0603	Rohm Semiconductor	MCR03ERTF1302	Yes
R75, R132	2	Resistor SMD	82 kΩ	1%	0603	Rohm Semiconductor	MCR03ERTF8202	Yes
R81	1	Resistor SMD	43 kΩ	1%	0603	Rohm Semiconductor	MCR03ERTF4302	Yes
R84, R119, R105	3	Resistor SMD	1 kΩ	1%	0603	Rohm Semiconductor	MCR03ERTF1001	Yes
R87, R92	2	Resistor SMD	2.7 kΩ	1%	1206	Rohm Semiconductor	MCR18ERTF2701	Yes
TR1	1	Transformer	POT33 (1 mH)	5%	POT33	Global Choice International LLC	POT331026037	Yes
SR DAUGHTERCARD								
C1, C4	2	Ceramic Capacitor	100 nF	10%	0805	Kemet	C0805C104K5RACTU	Yes
C2, C3, C5, C6	4	Ceramic Capacitor	470 nF/35 V	10%	0805	Taiyo Yuden	GMK212BJ474KG−T	Yes
C7	1	Ceramic Capacitor	22 nF	10%	0603	Kemet	C0603C223K3RACTU	Yes
C8	1	Ceramic Capacitor	NU	–	0603	–	–	Yes
C9, C10	2	Ceramic Capacitor	3.9 nF	10%	0805	Kemet	C0805C392K5RACTU	Yes
D1, D2	2	Switching Diode	BAS20HT1G	–	SOD323	ON Semiconductor	BAS20HT1G	No
IC1, IC2	2	Secondary Side Synchronous Rectifier	NCP4305	–	WDFN−8	ON Semiconductor	NCP4305DMNTWG	No
Q1, Q2	2	N-Channel Power MOSFET	NTMFS5C646NL	–	SO−8FL	ON Semiconductor	NTMFS5C646NLT1G	No
R1, R4	2	Resistor SMD	20 Ω	1%	0603	Rohm Semiconductor	MCR03ERTF20R0	Yes
R10, R11	2	Resistor SMD	15 Ω	1%	1206	Rohm Semiconductor	MCR18ERTF15R0	Yes
R2, R5	2	Resistor SMD	22 kΩ	1%	0603	Rohm Semiconductor	MCR03ERTF2202	Yes
R3, R6	2	Resistor SMD	4.7 kΩ	1%	0603	Rohm Semiconductor	MCR03ERTF4701	Yes
R7	1	Resistor SMD	10 kΩ	1%	0603	Rohm Semiconductor	MCR03ERTF1002	Yes
R8	1	Resistor SMD	0 Ω	1%	0603	Rohm Semiconductor	MCR03EZPJ000	Yes
R9	1	Resistor SMD	1 kΩ	1%	0603	Rohm Semiconductor	MCR03ERTF1001	Yes

NOTE: All parts are Pb-Free.

onsemi, ONSEMI, and other names, marks, and brands are registered and/or common law trademarks of Semiconductor Components Industries, LLC dba "**onsemi**" or its affiliates and/or subsidiaries in the United States and/or other countries. **onsemi** owns the rights to a number of patents, trademarks, copyrights, trade secrets, and other intellectual property. A listing of **onsemi**'s product/patent coverage may be accessed at www.onsemi.com/site/pdf/Patent−Marking.pdf. **onsemi** is an Equal Opportunity/Affirmative Action Employer. This literature is subject to all applicable copyright laws and is not for resale in any manner.

The evaluation board/kit (research and development board/kit) (hereinafter the "board") is not a finished product and is not available for sale to consumers. The board is only intended for research, development, demonstration and evaluation purposes and will only be used in laboratory/development areas by persons with an engineering/technical training and familiar with the risks associated with handling electrical/mechanical components, systems and subsystems. This person assumes full responsibility/liability for proper and safe handling. Any other use, resale or redistribution for any other purpose is strictly prohibited.

THE BOARD IS PROVIDED BY ONSEMI TO YOU "AS IS" AND WITHOUT ANY REPRESENTATIONS OR WARRANTIES WHATSOEVER. WITHOUT LIMITING THE FOREGOING, ONSEMI (AND ITS LICENSORS/SUPPLIERS) HEREBY DISCLAIMS ANY AND ALL REPRESENTATIONS AND WARRANTIES IN RELATION TO THE BOARD, ANY MODIFICATIONS, OR THIS AGREEMENT, WHETHER EXPRESS, IMPLIED, STATUTORY OR OTHERWISE, INCLUDING WITHOUT LIMITATION ANY AND ALL REPRESENTATIONS AND WARRANTIES OF MERCHANTABILITY, FITNESS FOR A PARTICULAR PURPOSE, TITLE, NON−INFRINGEMENT, AND THOSE ARISING FROM A COURSE OF DEALING, TRADE USAGE, TRADE CUSTOM OR TRADE PRACTICE.

onsemi reserves the right to make changes without further notice to any board.

You are responsible for determining whether the board will be suitable for your intended use or application or will achieve your intended results. Prior to using or distributing any systems that have been evaluated, designed or tested using the board, you agree to test and validate your design to confirm the functionality for your application. Any technical, applications or design information or advice, quality characterization, reliability data or other services provided by **onsemi** shall not constitute any representation or warranty by **onsemi**, and no additional obligations or liabilities shall arise from **onsemi** having provided such information or services.

onsemi products including the boards are not designed, intended, or authorized for use in life support systems, or any FDA Class 3 medical devices or medical devices with a similar or equivalent classification in a foreign jurisdiction, or any devices intended for implantation in the human body. You agree to indemnify, defend and hold harmless **onsemi**, its directors, officers, employees, representatives, agents, subsidiaries, affiliates, distributors, and assigns, against any and all liabilities, losses, costs, damages, judgments, and expenses, arising out of any claim, demand, investigation, lawsuit, regulatory action or cause of action arising out of or associated with any unauthorized use, even if such claim alleges that **onsemi** was negligent regarding the design or manufacture of any products and/or the board.

This evaluation board/kit does not fall within the scope of the European Union directives regarding electromagnetic compatibility, restricted substances (RoHS), recycling (WEEE), FCC, CE or UL, and may not meet the technical requirements of these or other related directives.

FCC WARNING − This evaluation board/kit is intended for use for engineering development, demonstration, or evaluation purposes only and is not considered by **onsemi** to be a finished end product fit for general consumer use. It may generate, use, or radiate radio frequency energy and has not been tested for compliance with the limits of computing devices pursuant to part 15 of FCC rules, which are designed to provide reasonable protection against radio frequency interference. Operation of this equipment may cause interference with radio communications, in which case the user shall be responsible, at its expense, to take whatever measures may be required to correct this interference.

onsemi does not convey any license under its patent rights nor the rights of others.

LIMITATIONS OF LIABILITY: **onsemi** shall not be liable for any special, consequential, incidental, indirect or punitive damages, including, but not limited to the costs of requalification, delay, loss of profits or goodwill, arising out of or in connection with the board, even if **onsemi** is advised of the possibility of such damages. In no event shall **onsemi**'s aggregate liability from any obligation arising out of or in connection with the board, under any theory of liability, exceed the purchase price paid for the board, if any.

The board is provided to you subject to the license and other terms per **onsemi**'s standard terms and conditions of sale. For more information and documentation, please visit www.onsemi.com.

ADDITIONAL INFORMATION

TECHNICAL PUBLICATIONS:
Technical Library: www.onsemi.com/design/resources/technical−documentation
onsemi Website: www.onsemi.com

ONLINE SUPPORT: www.onsemi.com/support
For additional information, please contact your local Sales Representative at www.onsemi.com/support/sales