ON Semiconductor

Is Now

To learn more about onsemi™, please visit our website at
www.onsemi.com

onsemi and onsemi and other names, marks, and brands are registered and/or common law trademarks of Semiconductor Components Industries, LLC dba "**onsemi**" or its affiliates and/or subsidiaries in the United States and/or other countries. **onsemi** owns the rights to a number of patents, trademarks, copyrights, trade secrets, and other intellectual property. A listing of **onsemi** product/patent coverage may be accessed at www.onsemi.com/site/pdf/Patent-Marking.pdf. **onsemi** reserves the right to make changes at any time to any products or information herein, without notice. The information herein is provided "as-is" and **onsemi** makes no warranty, representation or guarantee regarding the accuracy of the information, product features, availability, functionality, or suitability of its products for any particular purpose, nor does **onsemi** assume any liability arising out of the application or use of any product or circuit, and specifically disclaims any and all liability, including without limitation special, consequential or incidental damages. Buyer is responsible for its products and applications using **onsemi** products, including compliance with all laws, regulations and safety requirements or standards, regardless of any support or applications information provided by **onsemi**. "Typical" parameters which may be provided in **onsemi** data sheets and/or specifications can and do vary in different applications and actual performance may vary over time. All operating parameters, including "Typicals" must be validated for each customer application by customer's technical experts. **onsemi** does not convey any license under any of its intellectual property rights nor the rights of others. **onsemi** products are not designed, intended, or authorized for use as a critical component in life support systems or any FDA Class 3 medical devices or medical devices with a same or similar classification in a foreign jurisdiction or any devices intended for implantation in the human body. Should Buyer purchase or use **onsemi** products for any such unintended or unauthorized application, Buyer shall indemnify and hold **onsemi** and its officers, employees, subsidiaries, affiliates, and distributors harmless against all claims, costs, damages, and expenses, and reasonable attorney fees arising out of, directly or indirectly, any claim of personal injury or death associated with such unintended or unauthorized use, even if such claim alleges that **onsemi** was negligent regarding the design or manufacture of the part. **onsemi** is an Equal Opportunity/Affirmative Action Employer. This literature is subject to all applicable copyright laws and is not for resale in any manner. Other names and brands may be claimed as the property of others.

FAIRCHILD™

Is Now Part of

ON Semiconductor®

To learn more about ON Semiconductor, please visit our website at
www.onsemi.com

ON Semiconductor and the ON Semiconductor logo are trademarks of Semiconductor Components Industries, LLC dba ON Semiconductor or its subsidiaries in the United States and/or other countries. ON Semiconductor owns the rights to a number of patents, trademarks, copyrights, trade secrets, and other intellectual property. A listing of ON Semiconductor's product/patent coverage may be accessed at www.onsemi.com/site/pdf/Patent-Marking.pdf. ON Semiconductor reserves the right to make changes without further notice to any products herein. ON Semiconductor makes no warranty, representation or guarantee regarding the suitability of its products for any particular purpose, nor does ON Semiconductor assume any liability arising out of the application or use of any product or circuit, and specifically disclaims any and all liability, including without limitation special, consequential or incidental damages. Buyer is responsible for its products and applications using ON Semiconductor products, including compliance with all laws, regulations and safety requirements or standards, regardless of any support or applications information provided by ON Semiconductor. "Typical" parameters which may be provided in ON Semiconductor data sheets and/or specifications can and do vary in different applications and actual performance may vary over time. All operating parameters, including "Typicals" must be validated for each customer application by customer's technical experts. ON Semiconductor does not convey any license under its patent rights nor the rights of others. ON Semiconductor products are not designed, intended, or authorized for use as a critical component in life support systems or any FDA Class 3 medical devices or medical devices with a same or similar classification in a foreign jurisdiction or any devices intended for implantation in the human body. Should Buyer purchase or use ON Semiconductor products for any such unintended or unauthorized application, Buyer shall indemnify and hold ON Semiconductor and its officers, employees, subsidiaries, affiliates, and distributors harmless against all claims, costs, damages, and expenses, and reasonable attorney fees arising out of, directly or indirectly, any claim of personal injury or death associated with such unintended or unauthorized use, even if such claim alleges that ON Semiconductor was negligent regarding the design or manufacture of the part. ON Semiconductor is an Equal Opportunity/Affirmative Action Employer. This literature is subject to all applicable copyright laws and is not for resale in any manner.

User Guide for

GreenBridge™ Evaluation Kit for Power Over Ethernet 30 W Active Clamp Forward DC-DC

MLP 4.5x5 GreenBridge™

Featured Fairchild Product:

FDMQ8203

Direct questions or comments about this evaluation board to: "Worldwide Direct Support"

Fairchild Semiconductor.com

© 2012 Fairchild Semiconductor Corporation

Table of Contents

1. Introduction 3
   1.1. Description 3
   1.2. Features 3
2. Evaluation Board Specifications 3
3. Photographs 4
4. Printed Circuit Board 5
5. Schematic 6
6. Bill of Materials 8
7. Electrical Characteristics 11
8. Setup and Test Procedure 12
   8.1. Hardware Connector Description 12
9. Performance of Evaluation Board 13
10. Revision History 17

The following user guide supports the evaluation kit for the MLP4.5x5 GreenBridge™. It should be used in conjunction with the FDMQ8203 datasheet as well as Fairchild's application notes and technical support team. Please visit Fairchild's website at www.fairchildsemi.com.

1. Introduction

This board is designed to rectify the positive and negative polarity of a power source from Power Source Equipment (PSE) and regulate 48 V (42 V~57 V) to provide 12 V_{OUT}, 0-2.5 A (output power=30 W) with 250 kHz switching frequency. The board meets the required specification under IEEE802.3at.

1.1. Description

This kit contains the MLP 4.5x5 GreenBridge™ MOSFET evaluation board.

1.2. Features

- GreenBridge™ FDMQ8203 Quad P&N-Channel MOSFET
- Primary Switch FDMS86252 Single N-Channel 150 V MOSFET
- Active Clamp Switch FDMC2523P Single P-Channel 150 V MOSFET
- Secondary Forward Switch FDMS86520L Single N-Channel 60 V MOSFET
- Secondary Freewheeling Switch FDMS86520L Single N-Channel 60 V MOSFET
- Controller IEEE802.3at PD with Active Clamp Forward Controller
- Output-Voltage Range 12 V, Adjustable by R40 and R41
- Switching Frequency 250 kHz, Adjustable by R28
- Maximum Output Current 2.5 A, Limited by Power Component

2. Evaluation Board Specifications

Table 1. MOSFET Parameters

Part Number	Package	Type	BV_{DSS}(V)	$R_{DS(ON)}$ [mΩ] at 10 V_{GS}	Qg [nC] at 10 V_{GS}	C_{OSS} [pF]
				Max.	Max.	Max.
FDMQ8203	MLP 4.5x5	N-Ch	100	110	5	55
		P-Ch	-80	190	19	65
FDMS86252	POWER56	N-Ch	150	51	15	115
FDMC2523P	POWER33	P-Ch	-150	1500	9	80
FDMS86520L	POWER56	N-Ch	60	8.2	63	835

3. Photographs

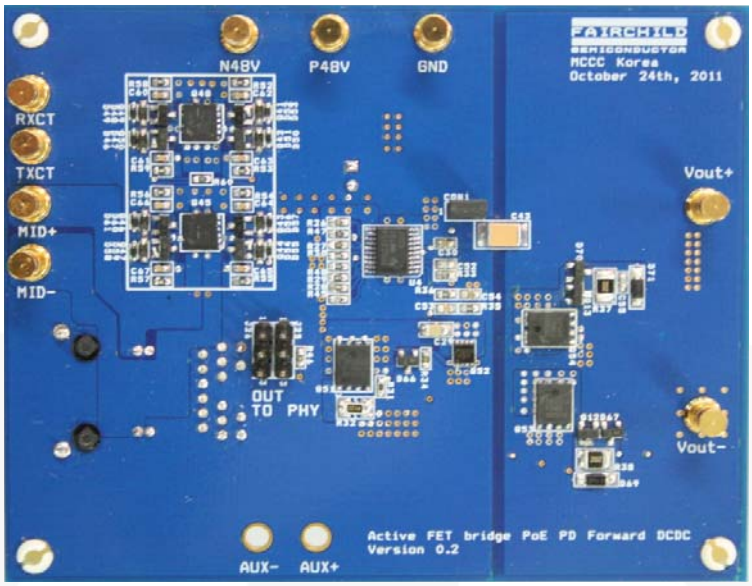

Figure 1. Top Side View of Evaluation Kit

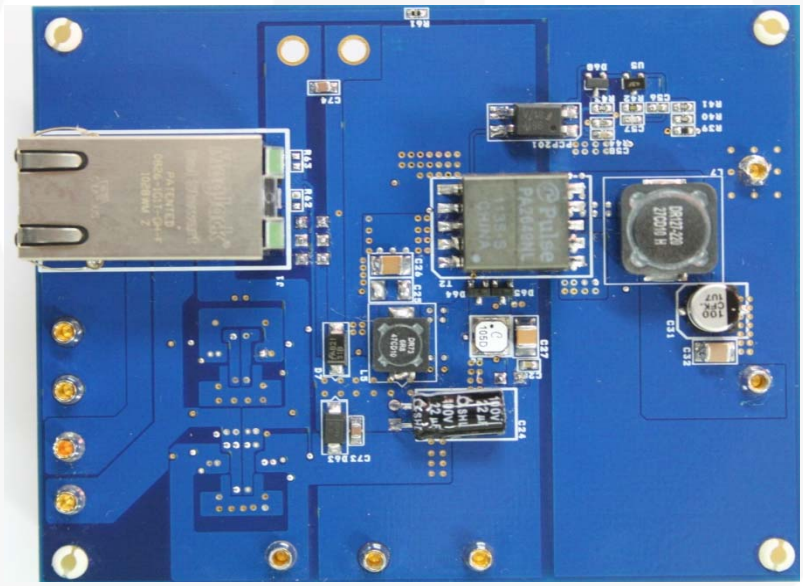

Figure 2. Bottom Side View of Evaluation Kit

4. Printed Circuit Board

PCB layout (100 mm x 80 mm, 4-Layer, FR-4).

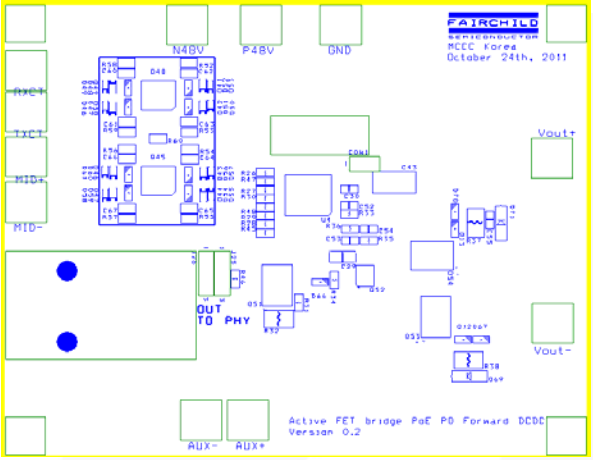

Figure 3. SST (Top Side) Layer

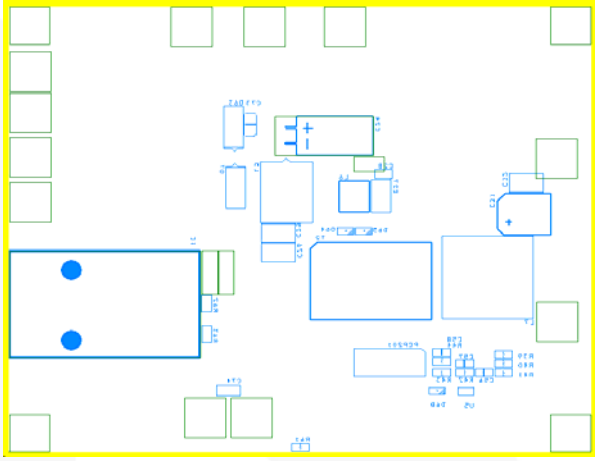

Figure 4. SSB (Bottom Side) Layer

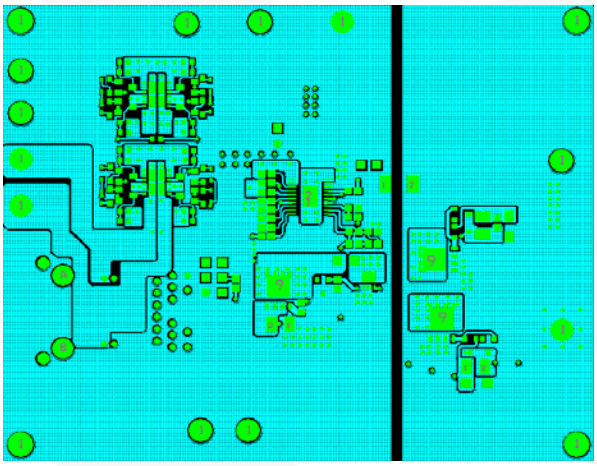

Figure 5. TOP & SMT Layer

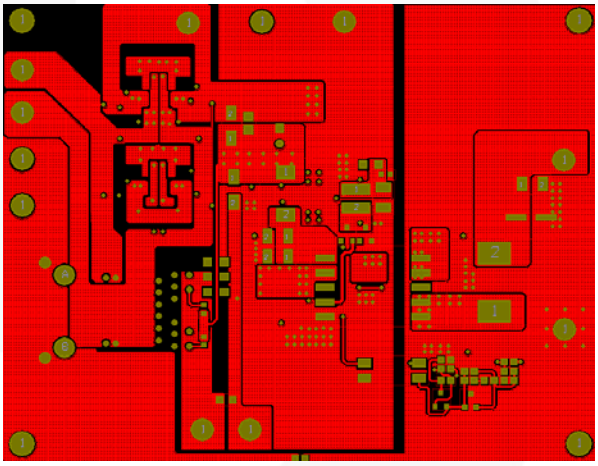

Figure 6. BOT & SMB Layer

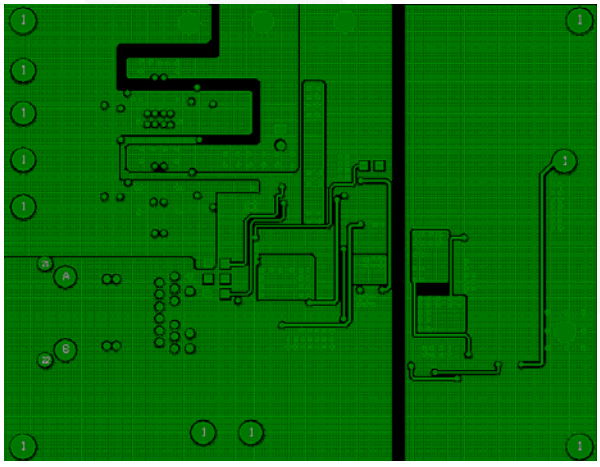

Figure 7. INNER1 (POWER) Layer

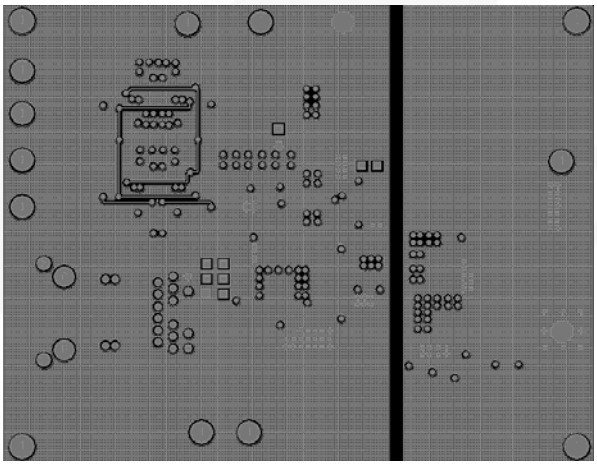

Figure 8. INNER2 (GND) Layer

5. Schematic

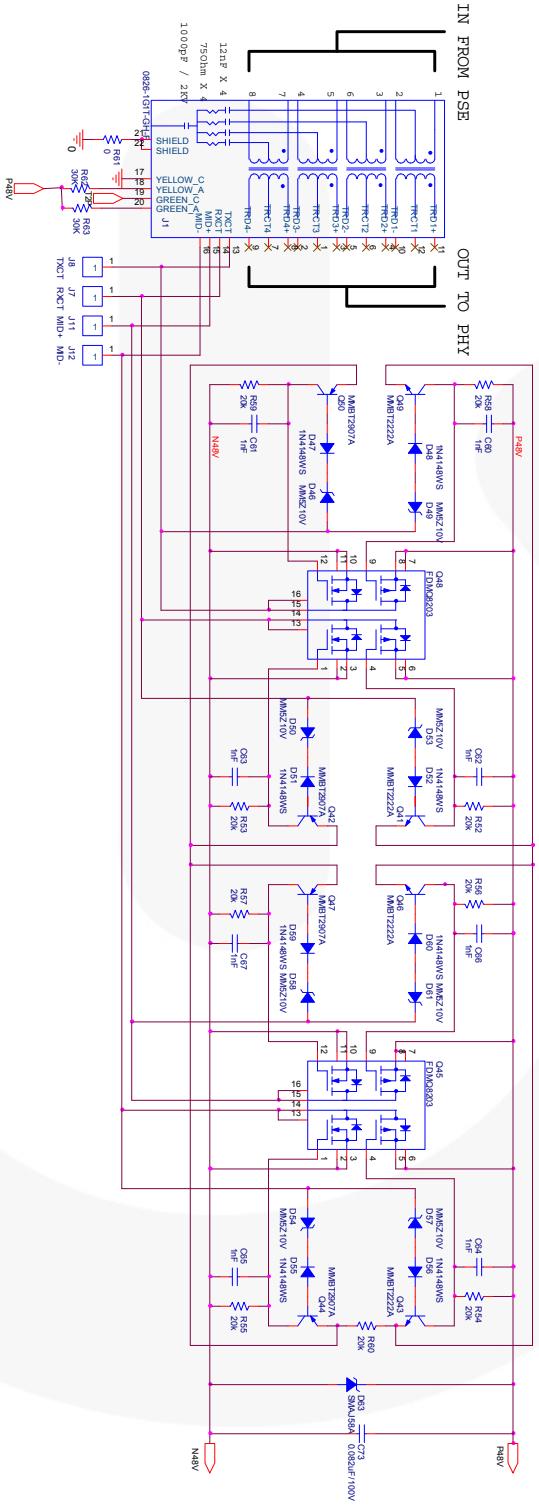

Figure 9. Active Bridge Block Schematic

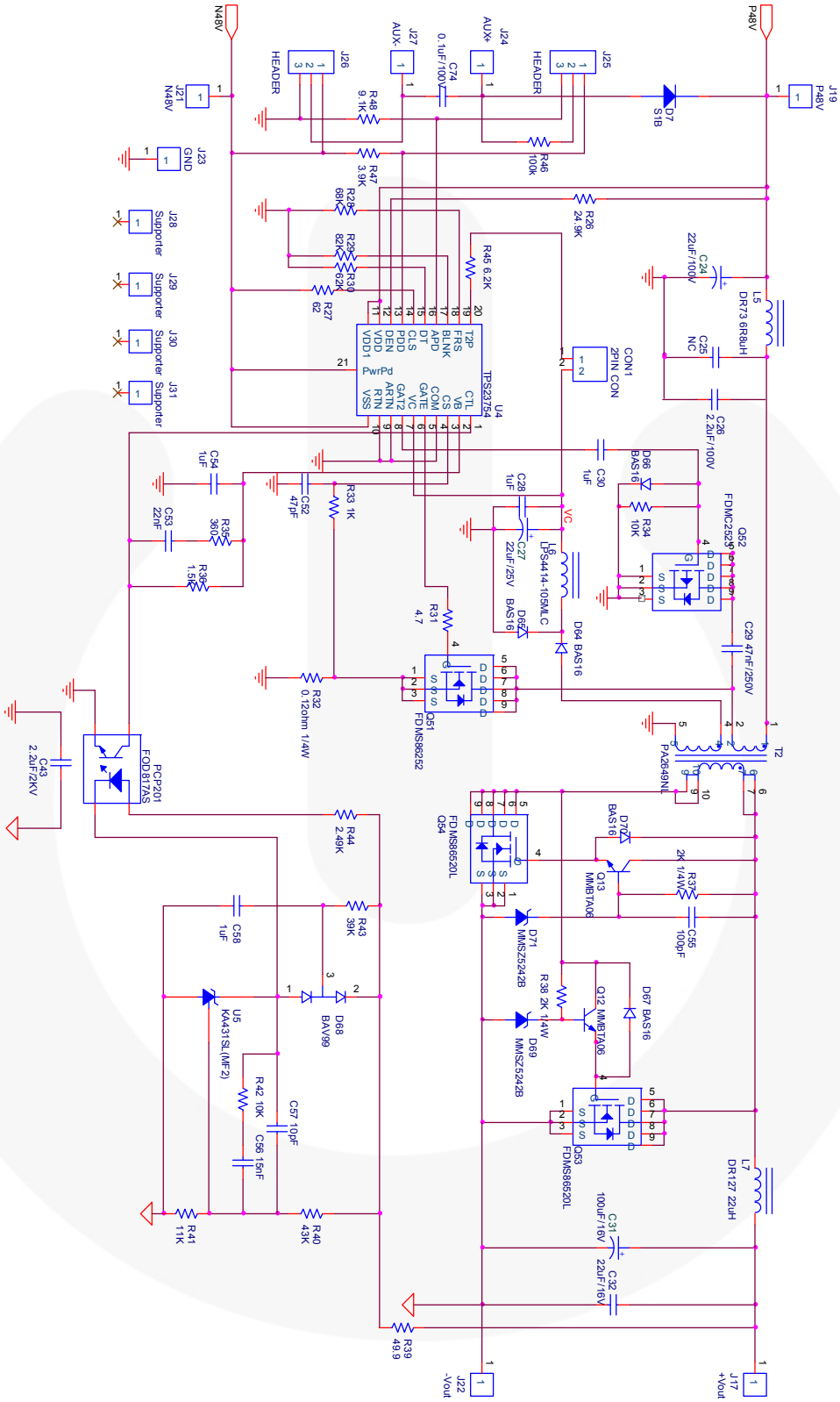

Figure 10. PoE Power Device Controller and Active Clamp Forward DCDC Block Schematic

6. Bill of Materials

Table 2. Bill of Materials

Item	Qty.	Reference	Part name	Vender	Comment
1	1	CON1	2PIN CON	Any	
2	1	C24	22 µF/100V	Sam young	Al Cap
3	1	C25	NC		
4	1	C26	GRM32ER72A225KA35L	Murata	2.2 µF / 100 V / 1210
5	1	C27	GRM32ER71E226KE15L	Murata	22 µF / 25 V / 3225
6	4	C28,C30,C54,C58	1 µF / 0603	Any	
7	1	C29	GRM31CR72E473KW03L	Murata	47 nF / 250 V
8	1	C31	EEE-1CA101P	Panasonic	100 µF / 16 V / Al Cap
9	1	C32	C3225X7RIC226M	TDK	22 µF / 16 V / 1210
10	1	C43	C4532X7R3D222K	TDK	2.2 nF/2 kV / 1812
11	1	C52	47 pF / 0603	Any	
12	1	C53	22 nF / 0603	Any	
13	1	C55	100 pF / 0603	Any	
14	1	C56	15 nF / 0603	Any	
15	1	C57	10 pF / 0603	Any	
16	8	C60,C61,C62,C63, C64,C65,C66,C67	1 nF / 0603	Any	
17	1	C73	C0805C823K1RACTU	Kemet	82 nF / 100 V / 0805
18	1	C74	C2012X7R2A104K	TDK	0.1 µF / 100 V / 0805
19	1	D7	S1B	Fairchild Semiconductor	
20	8	D46,D49,D50,D53, D54,D57,D58,D61	MM5Z10V	Fairchild Semiconductor	10 V Zenor Diode
21	8	D47,D48,D51,D52, D55,D56,D59,D60	1N4148WS	Fairchild Semiconductor	
22	1	D63	SMAJ58A	Diodes	TVS Diode
23	5	D64,D65, D66,D67,D70	BAS16	Fairchild Semiconductor	
24	1	D68	BAV99	Fairchild Semiconductor	
25	2	D69,D71	MMSZ5242B	Fairchild Semiconductor	12 V Zenor Diode
26	1	J1	0826-1G1T-GH-F	Belfuse	RJ45 w/ Transformer
27	2	J25,J26	3pin-HEADER	Any	
28	4	J28,J29,J30,J31	SSRS8-12-01	Richco Plastic co	Supporter
29	1	L5	DR73 6R8 µH	Coitronics	6.8 µH

Bill of Materials (Continued)

Item	Qty.	Reference	Part name	Vender	Comment
30	1	L6	LPS4414-105MLC	Coilcraft	1000 µH
31	1	L7	DR127 22 µH	Coiltronics	22 µH
32	1	PCP201	FOD817AS	Fairchild Semiconductor	Octocoupler
33	2	Q12,Q13	MMBTA06	Fairchild Semiconductor	
34	4	Q41,Q43,Q46,Q49	MMBT2222A	Fairchild Semiconductor	
35	4	Q42,Q44,Q47,Q50	MMBT2907A	Fairchild Semiconductor	
36	2	Q45,Q48	FDMQ8203	Fairchild Semiconductor	GreenBridge™ Quad MOSFET
37	1	Q51	FDMS86252	Fairchild Semiconductor	150 V 51 mΩ MOSFET
38	1	Q52	FDMC2523P	Fairchild Semiconductor	-150 V 1.5 Ω MOSFET
39	2	Q53,Q54	FDMS86520L	Fairchild Semiconductor	60 V 8.2 mΩ MOSFET
40	1	R26	24.9 kΩ / 0603	Any	
41	1	R27	62 Ω / 0603	Any	
42	1	R28	68 kΩ / 0603	Any	
43	1	R29	82 kΩ / 0603	Any	
44	1	R30	62 kΩ / 0603	Any	
45	1	R31	4.7 Ω / 0603	Any	
46	1	R32	MCR25JZHJ202	Panasonic	0.12 Ω 1/4 W / 1206
47	1	R33	1 kΩ / 0603	Any	
48	2	R34,R42	10 kΩ / 0603	Any	
49	1	R35	360 Ω / 0603	Any	
50	1	R36	1.5 kΩ / 0603	Any	
51	2	R37,R38	ERJ-8RSJR12V	Panasonic	2 kΩ 1/4 W / 1206
52	1	R39	49.9 Ω / 0603	Any	
53	1	R40	43 kΩ / 0603	Any	
54	1	R41	11 kΩ / 0603	Any	
55	1	R43	39 kΩ / 0603	Any	
56	1	R44	2.49 kΩ / 0603	Any	
57	1	R45	6.2 kΩ / 0603	Any	
58	1	R46	100 kΩ / 0603	Any	
59	1	R47	3.9 kΩ / 0603	Any	
60	1	R48	9.1 kΩ / 0603	Any	
61	9	R52,R53,R54,R55, R56,R57,R58,R59,R60	20 kΩ / 0603	Any	
62	1	R61	0 Ω / 0603	Any	

Bill of Materials (Continued)

Item	Qty.	Reference	Part name	Vender	Comment
63	2	R62,R63	30 kΩ / 0603	Any	
64	1	T2	PA2649NL	Pulse	Transformer
65	1	U4	TPS23754	TI	PD+Active Clamp Controller IC
66	1	U5	KA431SL(MF2)	Fairchild Semiconductor	Shunt Regulator

7. Electrical Characteristics

Table 3. Electrical Specification

Parameter	Value	Remark
GreenBridge™	FDMQ8203	Quad P&N-Channel MOSFET, Fairchild Semiconductor
Primary Switch	FDMS86252	Single N-Channel 150 V MOSFET, Fairchild Semiconductor
Active Clamp Switch	FDMC2523P	Single P-Channel 150 V MOSFET, Fairchild Semiconductor
Secondary Forward Switch	FDMS86520L	Single N-Channel 60 V MOSFET, Fairchild Semiconductor
Secondary Freewheeling Switch	FDMS86520L	Single N-Channel 60 V MOSFET, Fairchild Semiconductor
Controller	IEEE802.3at PD with Active Clamp Forward Controller	
V_{OUT} Range	12 V	Adjustable by R40 and R41
Switching Frequency	250 kHz	Adjustable by R28
Maximum I_{OUT}	2.5 A	Limited by Power Component

8. Setup and Test Procedure

Table 4. Test Point Descriptions

Test Point	Label	Descriptions
J19	P48 V	Measurement test point for rectified positive input voltage
J21	N48 V	Measurement test point for rectified negative input voltage
J20	GND	Measurement test point for input voltage return
J17	+VOUT	Measurement test point for output voltage
J22	-VOUT	Measurement test point for output voltage return

8.1. Hardware Connector Description

The evaluation kit is fully assembled and tested. Follow the steps below to verify board operation.

1. Use one of the following methods to power the evaluation kit:
   - If network connectivity is required: Connect a CAT5 Ethernet network cable from the evaluation kit input port RJ45 connector to the corresponding PSE Ethernet LAN connection, which provides power to the evaluation kit.
   - If network connectivity is not required: Connect a -48 V DC power supply between the TXCT and RXCT. Connect a -48 V DC power supply between the MID+ and MID-.

   Caution: Do not turn on the power supply until all connections are completed.
2. Activate the PSE power supply or turn on the external DC power supply.
3. Using a voltmeter, verify that the evaluation kit provides +12 V across the +VOUT and –VOUT pins. –VOUT is isolated from the evaluation kit's input N48 V and GND pins.

9. Performance of Evaluation Board

Figure 11 through 0 show measured data.

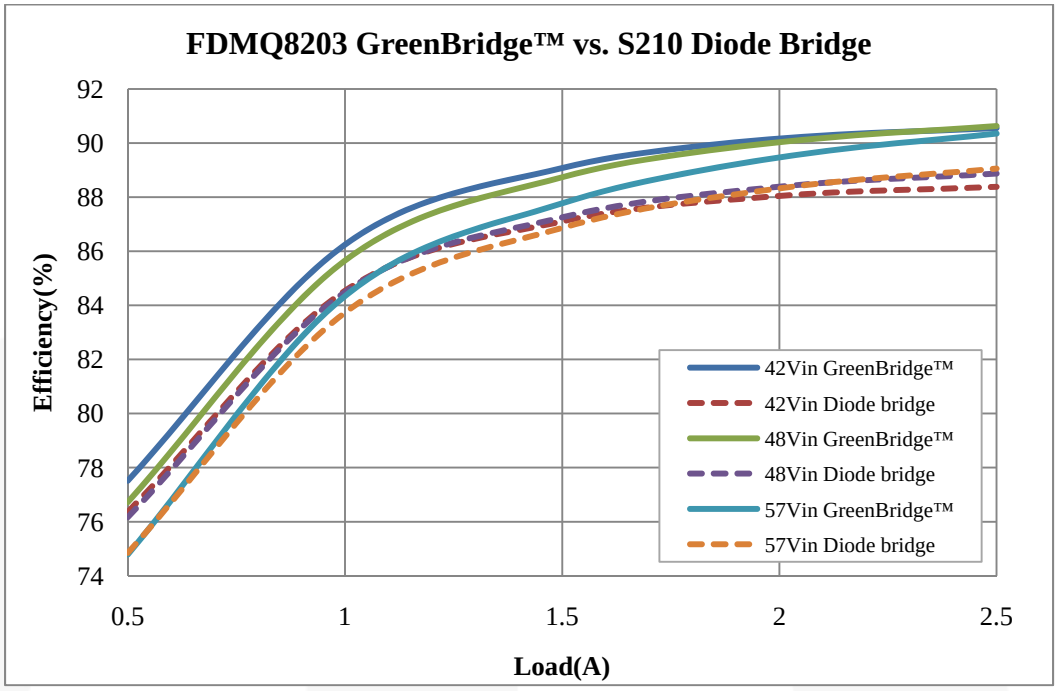

Figure 11. Efficiency at V_{OUT}=12 V, f_{SW}=250 kHz, Soaking=5 Minutes, T_A=25°C

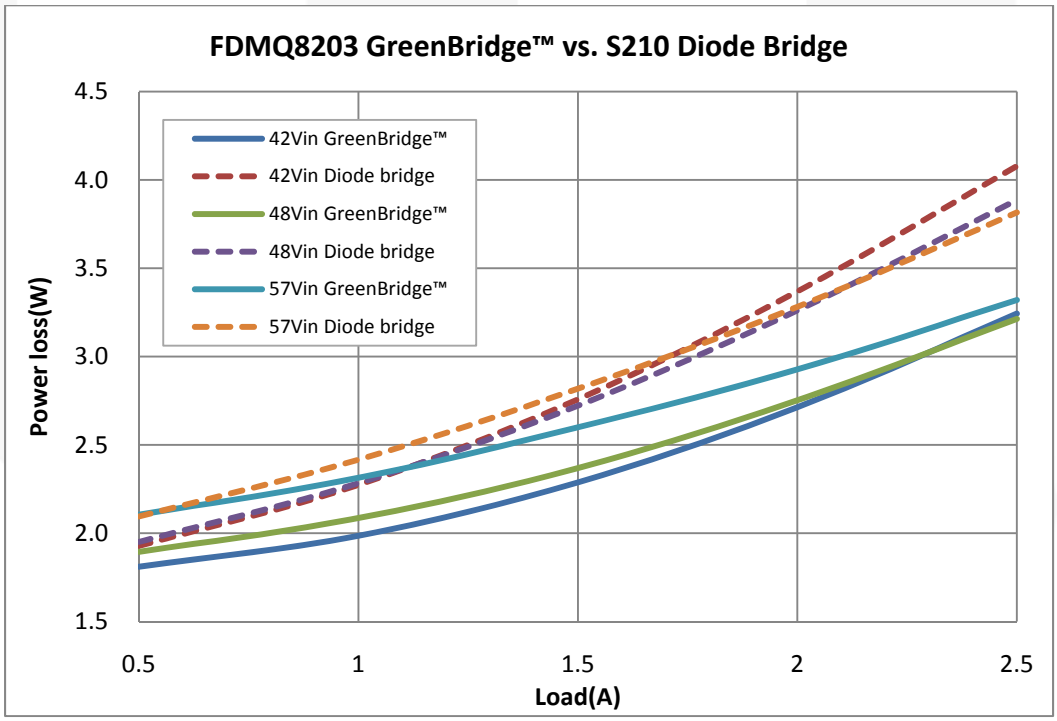

Figure 12. Power Loss at V_{OUT}=12 V, f_{SW}=250 kHz, Soaking=5 Minutes, T_A=25°C

	S210 Diode Bridge	FDMQ8203 GreenBridge™
42 V_{IN}	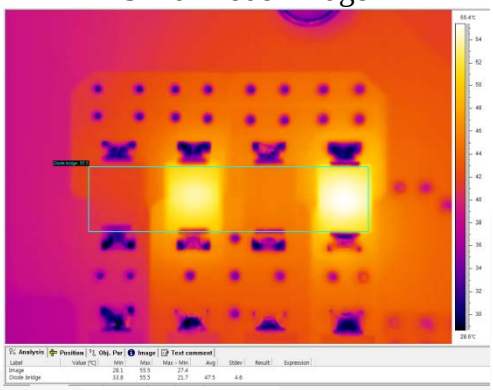	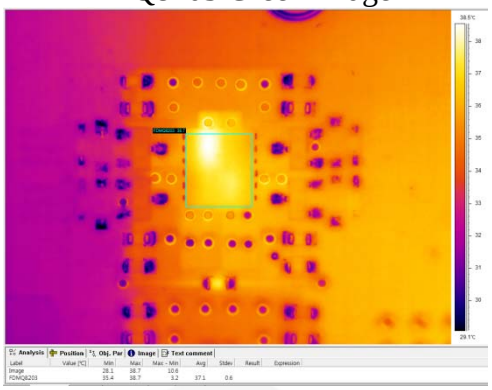
	55.5°C	38.7°C
48 V_{IN}	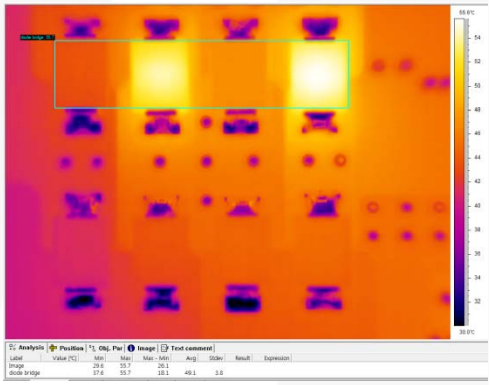	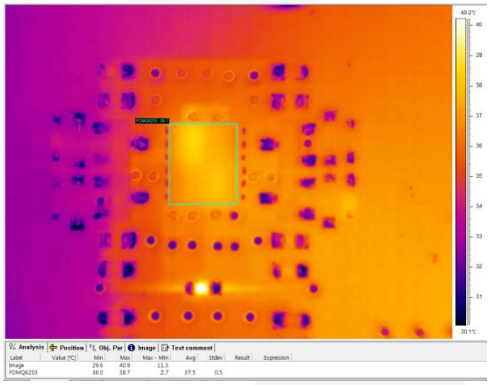
	56.7°C	38.7°C
57V_{IN}	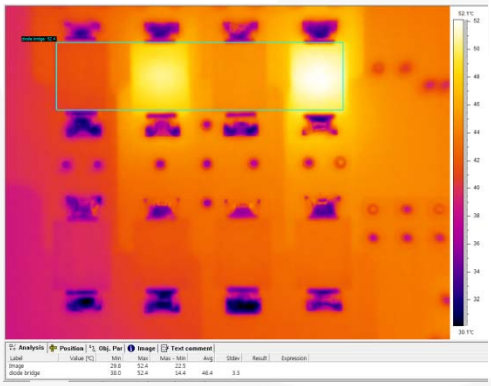	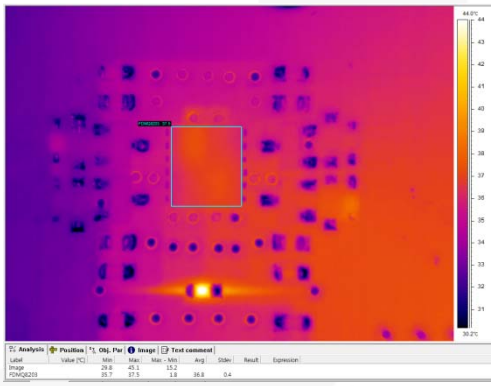
	52.4°C	37.5°C

Figure 13. Top Side Thermal Data, V_{OUT}=12 V I_{OUT}= 2.5 A, f_{SW}= 250 kHz, Soaking=5 Minutes, T_A=25°C

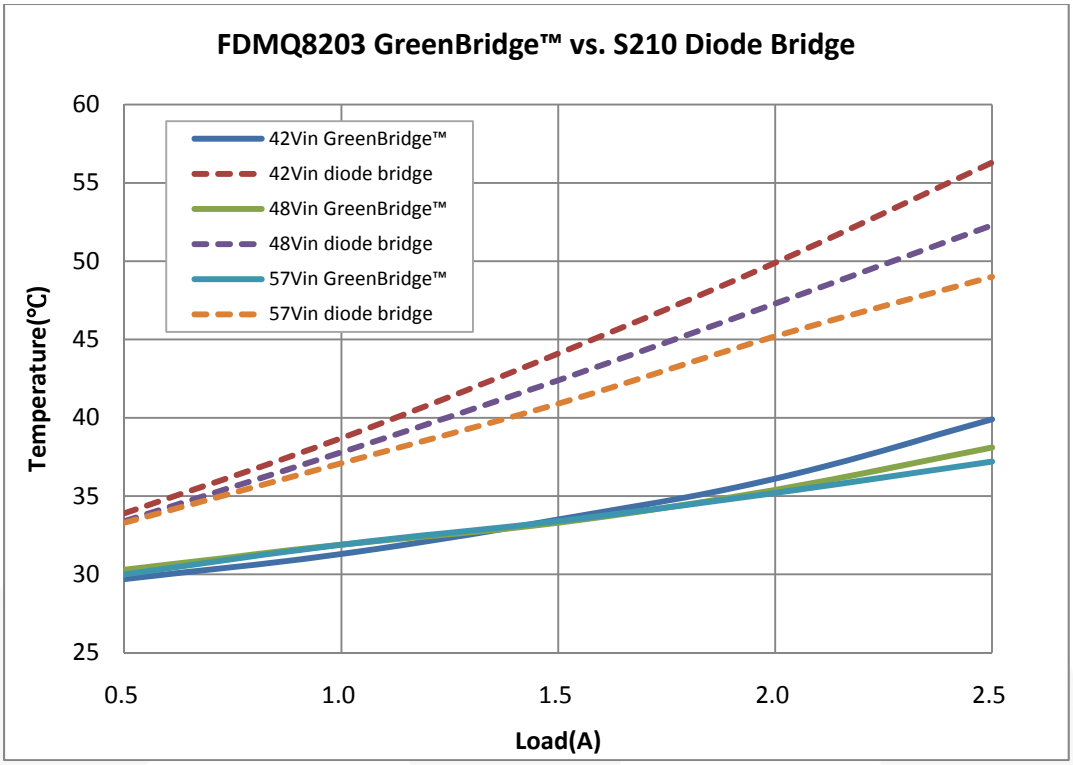

Figure 14. Top Side Thermal Date at V_{OUT}=12 / I_{OUT}= 2.5A, f_{SW}= 250 KHz, Soaking=5 Minutes, T_A=25°C,

Figure 15. Top Side Thermal Date at V_{IN}=48 V, V_{OUT}=12 / I_{OUT}= 2.5 A, f_{SW}= 250 KHz, Soaking=10 Minutes, T_A=25°C,

Figure 16. Top Side Thermal Date at V_{IN}=48 V, V_{OUT}=12 / I_{OUT}= 2.5 A , f_{SW}= 250 KHz, Soaking=10 Minutes, T_A=25°C,

10. Revision History

Rev.	Date	Description
0.1.0	June 4, 2012	Initial Release
1.0.0	November 28, 2012	Reformat to template Proofread and correct content

WARNING AND DISCLAIMER

Replace components on the Evaluation Board only with those parts shown on the parts list (or Bill of Materials) in the Users' Guide. Contact an authorized Fairchild representative with any questions.

This board is intended to be used by certified professionals, in a lab environment, following proper safety procedures. Use at your own risk. The Evaluation board (or kit) is for demonstration purposes only and neither the Board nor this User's Guide constitute a sales contract or create any kind of warranty, whether express or implied, as to the applications or products involved. Fairchild warrantees that its products meet Fairchild's published specifications, but does not guarantee that its products work in any specific application. Fairchild reserves the right to make changes without notice to any products described herein to improve reliability, function, or design. Either the applicable sales contract signed by Fairchild and Buyer or, if no contract exists, Fairchild's standard Terms and Conditions on the back of Fairchild invoices, govern the terms of sale of the products described herein.

DISCLAIMER

FAIRCHILD SEMICONDUCTOR RESERVES THE RIGHT TO MAKE CHANGES WITHOUT FURTHER NOTICE TO ANY PRODUCTS HEREIN TO IMPROVE RELIABILITY, FUNCTION, OR DESIGN. FAIRCHILD DOES NOT ASSUME ANY LIABILITY ARISING OUT OF THE APPLICATION OR USE OF ANY PRODUCT OR CIRCUIT DESCRIBED HEREIN; NEITHER DOES IT CONVEY ANY LICENSE UNDER ITS PATENT RIGHTS, NOR THE RIGHTS OF OTHERS.

LIFE SUPPORT POLICY

FAIRCHILD'S PRODUCTS ARE NOT AUTHORIZED FOR USE AS CRITICAL COMPONENTS IN LIFE SUPPORT DEVICES OR SYSTEMS WITHOUT THE EXPRESS WRITTEN APPROVAL OF THE PRESIDENT OF FAIRCHILD SEMICONDUCTOR CORPORATION.

As used herein:

1. Life support devices or systems are devices or systems which, (a) are intended for surgical implant into the body, or (b) support or sustain life, or (c) whose failure to perform when properly used in accordance with instructions for use provided in the labeling, can be reasonably expected to result in significant injury to the user.
2. A critical component is any component of a life support device or system whose failure to perform can be reasonably expected to cause the failure of the life support device or system, or to affect its safety or effectiveness.

ANTI-COUNTERFEITING POLICY

Fairchild Semiconductor Corporation's Anti-Counterfeiting Policy. Fairchild's Anti-Counterfeiting Policy is also stated on our external website, www.fairchildsemi.com, under Sales Support.

Counterfeiting of semiconductor parts is a growing problem in the industry. All manufacturers of semiconductor products are experiencing counterfeiting of their parts. Customers who inadvertently purchase counterfeit parts experience many problems such as loss of brand reputation, substandard performance, failed applications, and increased cost of production and manufacturing delays. Fairchild is taking strong measures to protect ourselves and our customers from the proliferation of counterfeit parts. Fairchild strongly encourages customers to purchase Fairchild parts either directly from Fairchild or from Authorized Fairchild Distributors who are listed by country on our web page cited above. Products customers buy either from Fairchild directly or from Authorized Fairchild Distributors are genuine parts, have full traceability, meet Fairchild's quality standards for handling and storage and provide access to Fairchild's full range of up-to-date technical and product information. Fairchild and our Authorized Distributors will stand behind all warranties and will appropriately address any warranty issues that may arise. Fairchild will not provide any warranty coverage or other assistance for parts bought from Unauthorized Sources. Fairchild is committed to combat this global problem and encourage our customers to do their part in stopping this practice by buying direct or from authorized distributors.

EXPORT COMPLIANCE STATEMENT

These commodities, technology, or software were exported from the United States in accordance with the Export Administration Regulations for the ultimate destination listed on the commercial invoice. Diversion contrary to U.S. law is prohibited.

U.S. origin products and products made with U.S. origin technology are subject to U.S Re-export laws. In the event of re-export, the user will be responsible to ensure the appropriate U.S. export regulations are followed.

ON Semiconductor and ON are trademarks of Semiconductor Components Industries, LLC dba ON Semiconductor or its subsidiaries in the United States and/or other countries. ON Semiconductor owns the rights to a number of patents, trademarks, copyrights, trade secrets, and other intellectual property. A listing of ON Semiconductor's product/patent coverage may be accessed at www.onsemi.com/site/pdf/Patent−Marking.pdf. ON Semiconductor reserves the right to make changes without further notice to any products herein. ON Semiconductor makes no warranty, representation or guarantee regarding the suitability of its products for any particular purpose, nor does ON Semiconductor assume any liability arising out of the application or use of any product or circuit, and specifically disclaims any and all liability, including without limitation special, consequential or incidental damages. Buyer is responsible for its products and applications using ON Semiconductor products, including compliance with all laws, regulations and safety requirements or standards, regardless of any support or applications information provided by ON Semiconductor. "Typical" parameters which may be provided in ON Semiconductor data sheets and/or specifications can and do vary in different applications and actual performance may vary over time. All operating parameters, including "Typicals" must be validated for each customer application by customer's technical experts. ON Semiconductor does not convey any license under its patent rights nor the rights of others. ON Semiconductor products are not designed, intended, or authorized for use as a critical component in life support systems or any FDA Class 3 medical devices or medical devices with a same or similar classification in a foreign jurisdiction or any devices intended for implantation in the human body. Should Buyer purchase or use ON Semiconductor products for any such unintended or unauthorized application, Buyer shall indemnify and hold ON Semiconductor and its officers, employees, subsidiaries, affiliates, and distributors harmless against all claims, costs, damages, and expenses, and reasonable attorney fees arising out of, directly or indirectly, any claim of personal injury or death associated with such unintended or unauthorized use, even if such claim alleges that ON Semiconductor was negligent regarding the design or manufacture of the part. ON Semiconductor is an Equal Opportunity/Affirmative Action Employer. This literature is subject to all applicable copyright laws and is not for resale in any manner.

PUBLICATION ORDERING INFORMATION

LITERATURE FULFILLMENT:
Literature Distribution Center for ON Semiconductor
19521 E. 32nd Pkwy, Aurora, Colorado 80011 USA
Phone: 303−675−2175 or 800−344−3860 Toll Free USA/Canada
Fax: 303−675−2176 or 800−344−3867 Toll Free USA/Canada
Email: orderlit@onsemi.com

N. American Technical Support: 800−282−9855 Toll Free USA/Canada
Europe, Middle East and Africa Technical Support:
Phone: 421 33 790 2910
Japan Customer Focus Center
Phone: 81−3−5817−1050

ON Semiconductor Website: **www.onsemi.com**

Order Literature: http://www.onsemi.com/orderlit

For additional information, please contact your local Sales Representative