ON Semiconductor

Is Now

To learn more about onsemi™, please visit our website at
www.onsemi.com

FAIRCHILD™

Is Now Part of

ON Semiconductor®

To learn more about ON Semiconductor, please visit our website at
www.onsemi.com

AN-8210

PowerTrench® N-MOSFETs in Automotive Motor Drive and Switching Applications

Application Board with N-MOSFETs and HV-IC Gate drivers for motor drives switching performance evaluations

Abstract

Power MOSFET and package technology has evolved over the years leading to significant improvements in overall efficiency and power density. This application note discusses the application evaluation of the latest 40 V/80 A, 1.8 mΩ N-Channel MOSFET - FDMS9408_F085 based on PowerTrench® technology in Power Quad Flat No-Lead Package (PQFN 5 mm x 6 mm) package. The designed PCB board is a universal application tool and serves as a reference design for other voltages too for switching performance evaluation. Fairchild's FAN7190_F085 an automotive qualified high- and low-side gate driver IC is used to drive the high speed MOSFETs.

Introduction

FDMS9408_F085 is qualified to AEC Q101 automotive standards and is RoHS compliant. The small foot print with increased power density and leadless package resulting in low inductance makes it suitable for low voltage and high current automotive applications like engine control, power train management, solenoid and motor drives, integrated starter/alternator and as primary switch for 12 V bus systems. First, the PCB design of the three phase evaluation board in half-bridge configuration is shown. Then, the switching performance is evaluated with a standard double pulse test set up for various load currents. Finally, the Build of Materials (BOM)is given for reference.

Package Dimension and Details

The PQFN is a MLP-type package designed to meet the high-power dissipation requirements of automotive applications. It is a surface mount, molded package with lead pads at the bottom. The package reference is based on JEDEC [1]. The 3-D drawing of the package with pin configurations is shown in Figure 1. For the latest package drawing please refer to the Fairchild website [2].

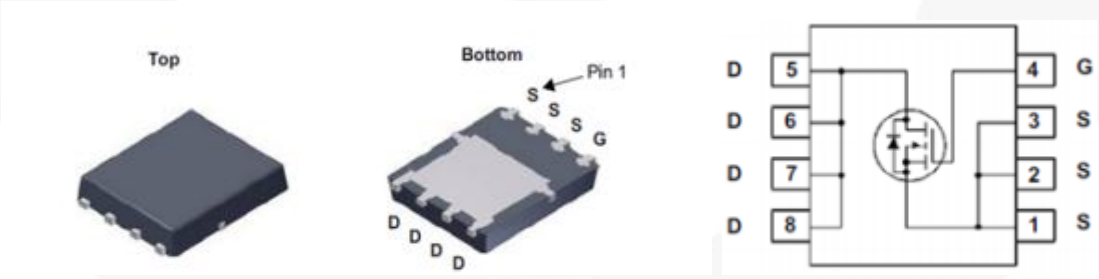

Figure 1. Power 56 3-D Package and Pin Outline

PCB Layout with Integrated Gate Driver

The evaluation board is designed to drive 3-phase systems with 3 half-bridge phase legs containing 6 MOSFETs in total as shown in Figure 2 Each phase leg contains a FAN7190_F085 half-bridge Gate driver capable of driving high-speed MOSFETs. All the devices have separate external Gate resistors $R_{g\text{-}on}$ and $R_{g\text{-}off}$ to control the switching speeds during turn-on and turn-off respectively. The PCB is designed in such a way that MOSFETs can also be driven with external gate driver circuits, if desired. Please refer to Figure 8 for more details on that. It is recommended to read [3] for the proper board assembly and for the better understanding of the common defects that arise when mounting PQFN packages.

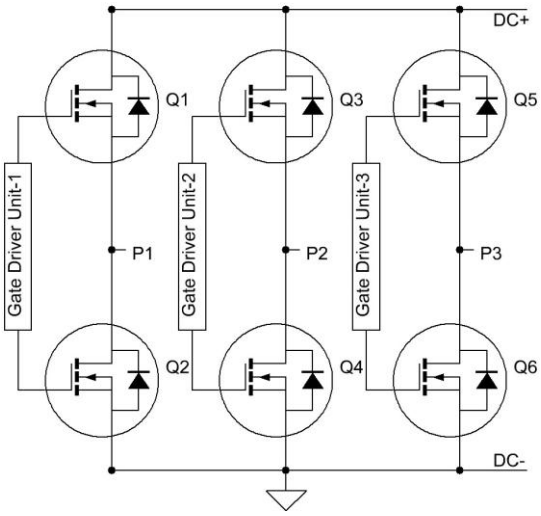

Figure 2. Schematic of the PCB

The PCB layout of the top and bottom sides is shown in Figure 3 and Figure 4. The picture is 2x times the actual board size. There exists symmetry between all the three phases. All the components are mounted on the top side. The power stage is provided with a 5- pin connector[4] (black rectangle) for DC+, DC-, P1, P2 and P3 terminals Also, each gate driver is provided with a 4-pin connector[5] for driver supply, ground, low and high side input control signals.

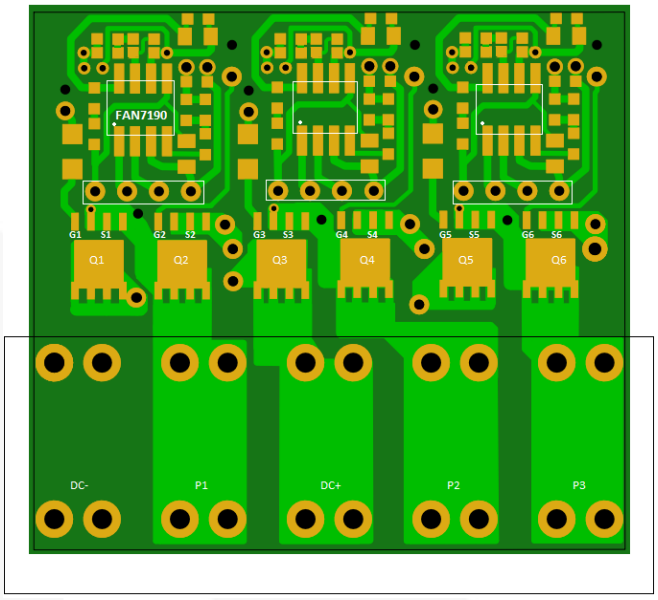

Figure 3. Top Layer

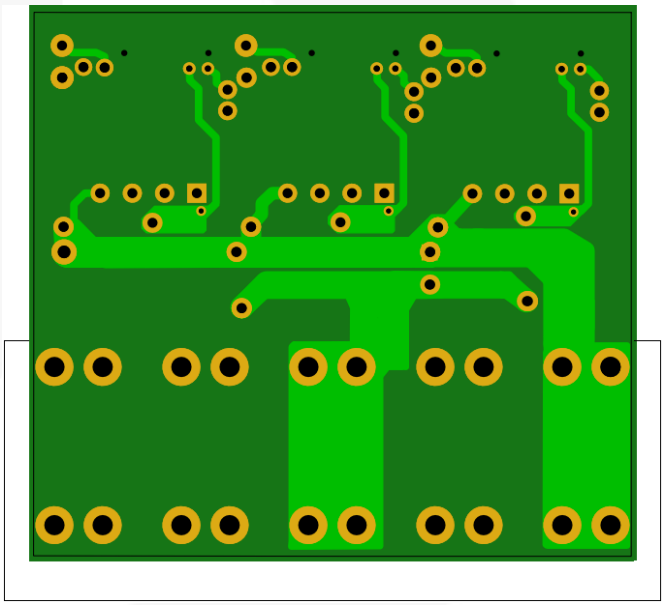

Figure 4. Bottom Layer (Mirrored Image) Board
(Dimensions 47 mm x 43 mm. Picture shown here is 2x times the actual board size)

Dynamic Characterization

As mentioned earlier that all the phase legs are symmetrical, one half-bridge is considered for the switching loss evaluation. The standard double pulse setup[6] with Q4 as DUT and the body diode of Q3 for free-wheeling is used with an inductive load. The gate driver with boot strap elements and external gate resistors for such a setup is shown in Figure 5. For the proper selection of boot strap components please refer to [7].

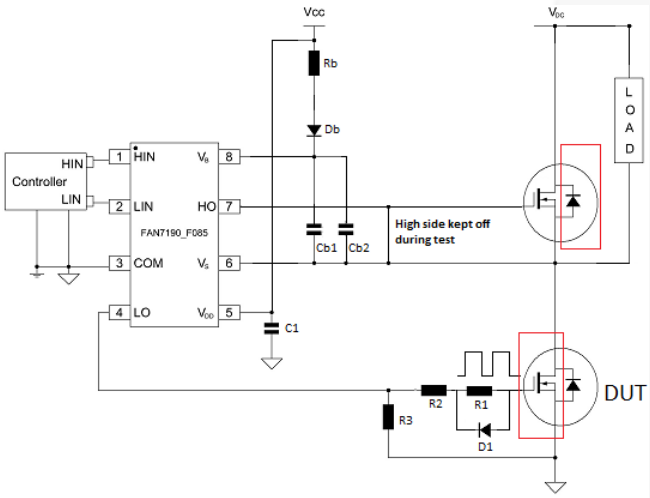

Figure 5. Double Pulse Test Setup with an Inductive Load and the Gate Driver Circuit

Figure 6 shows the typical switching waveforms during turn-off for an inductive load with a bus voltage of 18 V and for a load current of 40 A.

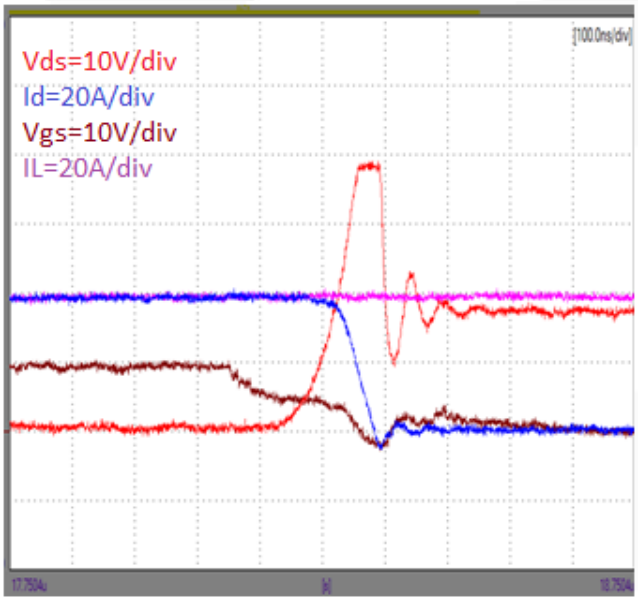

Figure 6. Turn-off Waveform at V_{ds}=18 V; I_d=40 A;t=100 ns $R_{g\text{-}on}$=20 Ω; $R_{g\text{-}off}$=15 Ω; T=25°C; L=10 µH; V_{gs}=10 V

The measurements are repeated for different load currents and the switching loss is shown in Figure 7.

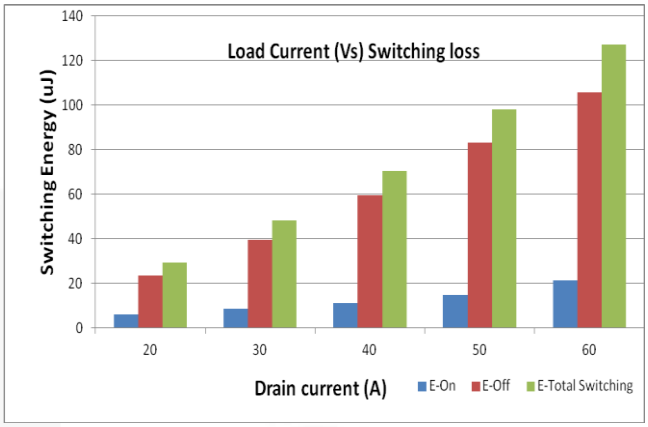

Figure 7. Switching Loss at Different Load Currents

PCB Components and BOM

The placement of components on the board is shown only for one leg as the layout is same for other two half-bridge legs.

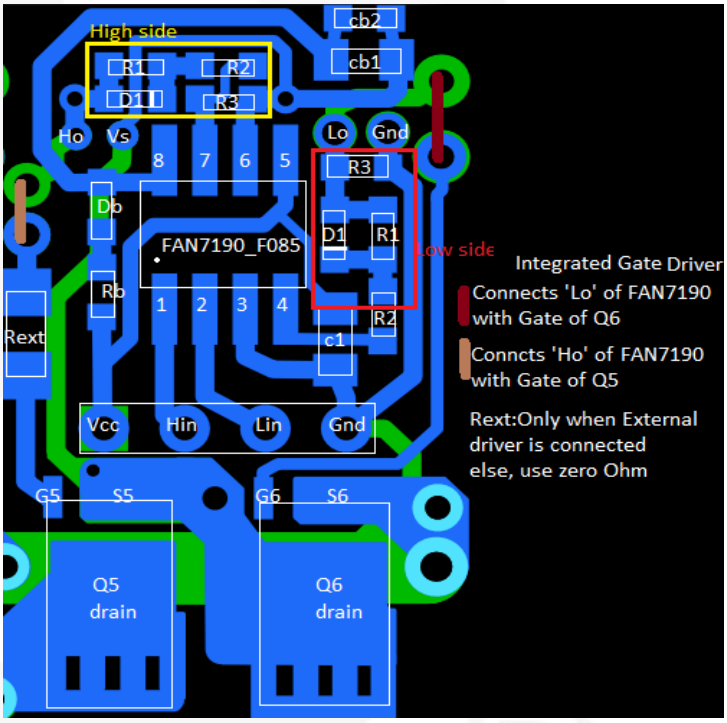

Figure 8. Components of a Half Bridge on PCB.
(Co-relate with Figure 3, Figure 4 and Figure 5 Also, the figure gives notes for external gate driver circuit configurations.)

Table 1. Bill Of Materials (BOM)

S.No	Component	Value	Package
1.	Rb	100 Ω	0603
2.	Cb1	47 nF	0805
3.	Cb2	1nF	0603
4.	R1	5 Ω	0603
5.	R2	15 Ω	0603
6.	R3	47KΩ	0603
7.	C1	47 µf	0805
8.	Small signal diode D1,Db	100 V,150 mW,4 A	0603
9.	Rext	0 Ω	1206
10.	Q5,Q6	FDMS9408_F085	Power56
11.	Power Terminal, PLH 16/ 5-10 – 1770429	5-pin	Phoenix Contact[4]
12.	Gate driver connector; MOLEX 22-28-4040	4-pin	4 SIP Socket[5]

References

[1] *JEDEC Registration, MO- 240, Issue B Dated 10/2009*

[2] *PQFN package drawing and land pad recommendations, "***https://www.fairchildsemi.com/package-drawings/PQ/PQFN08M.pdf***"*

[3] *PQFN package assembly and mounting recommendations, "***https://www.fairchildsemi.com/technical-articles/Board-Level-Evaluation-of-Power-Quad-Flat-No-Lead-PQFN-Packages.pdf"**

[4] *PCB terminal block - PLH 16/ 5-10 – 1770429, "***https://www.phoenixcontact.com/online/portal/us?uri=pxc-oc-itemdetail:pid=1770429&library=usen&tab=1&requestType=product&productId=1770429***"*

[5] *MOLEX 22-28-4040 Wire-To-Board-Steckverbinder, Baureihe KK 42375,Durchsteckmontage, Stiftleiste,4, 2.54mm, "***http://de.farnell.com/molex/22-28-4040/connector-header-4pos-1row-2-54mm/dp/2381172***"*

[6] *MOSFET Basics and switching test, "***https://www.fairchildsemi.com/application-notes/AN/AN-9010.pdf***"*

[7] *Design and application guide of bootstrap circuit for High-Voltage Gate-Driver IC, "***https://www.fairchildsemi.com/application-notes/AN/AN-6076.pdf*** *"*

.

Related Datasheets

[1] *FDMS9408_F085 Datasheet*

[2] *FAN7190_F085 Datasheet*

PUBLICATION ORDERING INFORMATION

LITERATURE FULFILLMENT:
Literature Distribution Center for ON Semiconductor
19521 E. 32nd Pkwy, Aurora, Colorado 80011 USA
Phone: 303−675−2175 or 800−344−3860 Toll Free USA/Canada
Fax: 303−675−2176 or 800−344−3867 Toll Free USA/Canada
Email: orderlit@onsemi.com

N. American Technical Support: 800−282−9855 Toll Free USA/Canada
Europe, Middle East and Africa Technical Support:
Phone: 421 33 790 2910
Japan Customer Focus Center
Phone: 81−3−5817−1050

ON Semiconductor Website: **www.onsemi.com**

Order Literature: http://www.onsemi.com/orderlit

For additional information, please contact your local Sales Representative