ON Semiconductor®
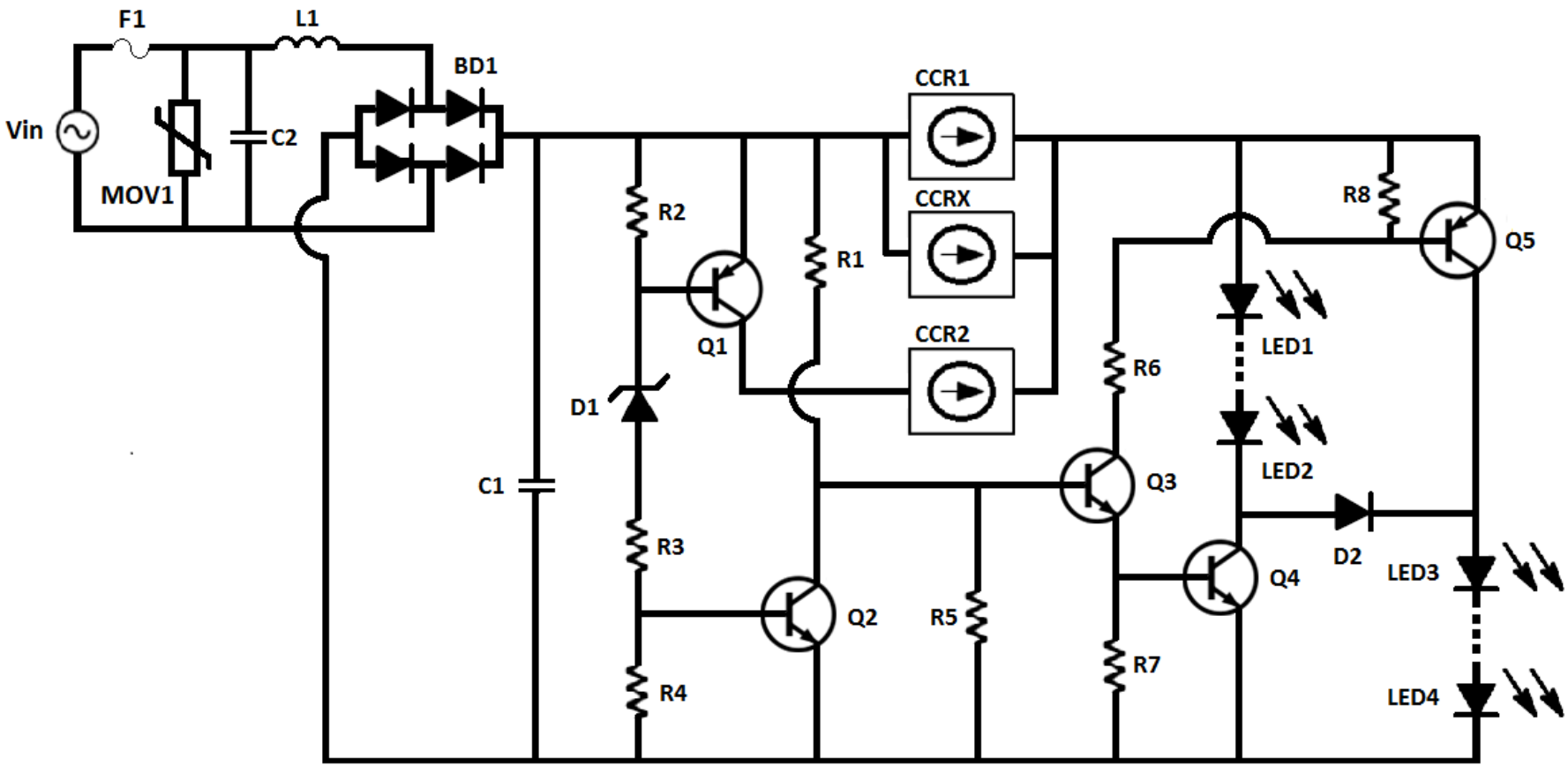
Schematic for the 60WLEDBULBGEVB Evaluation Board