Subminiature Plastic Silicon Infrared Phototransistor

QSB363

Description

The QSB363 is a silicon phototransistor encapsulated in a black infrared transparent T−3/4 package.

Features

- NPN Silicon Phototransistor
- T−3/4 (2 mm) Surface Mount Package
- Medium Wide Beam Angle: 24°
- Black Plastic Package
- Matched Emitters: QEB363 or QEB373
- Daylight Filter
- Lead Form Options: Gullwing, Yoke, Z−Bend
- This is a Pb−Free Device and Halide Free Device

SCHEMATIC

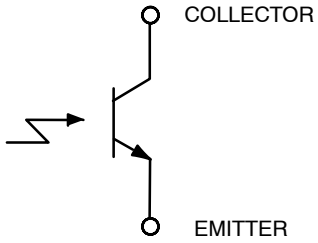

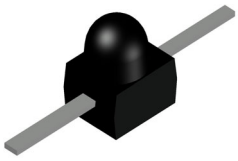

T−3/4 2.50 x 2.00
CASES 100CB

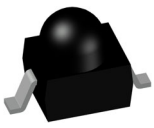

T−3/4 2.50 x 2.00
CASES 100EH

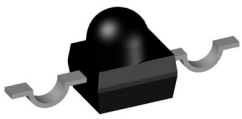

T−3/4 2.50 x 2.00
CASES 100EJ

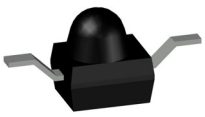

T−3/4 2.50 x 2.00
CASES 100EK

ABSOLUTE MAXIMUM RATINGS (Values are at TA = 25°C unless specified otherwise).

Symbol	Parameter	Value	Unit
T_{OPR}	Operating Temperature	−40 to +85	°C
T_{STG}	Storage Temperature	−40 to +85	°C
T_{SOL-I}	Soldering Temperature (Iron) (Notes 1, 2)	260	°C
T_{SOL-F}	Soldering Temperature (Flow) (Notes 1, 2)	260	°C
V_{CEO}	Collector−Emitter Voltage	30	V
V_{ECO}	Emitter−Collector Voltage	5	V
P_C	Power Dissipation (Note 3)	75	mW

Stresses exceeding those listed in the Maximum Ratings table may damage the device. If any of these limits are exceeded, device functionality should not be assumed, damage may occur and reliability may be affected.

1. RMA flux is recommended.
2. Methanol or isopropyl alcohols are recommended as cleaning agents.
3. Derate power dissipation linearly 1.08 mW/°C above 25°C.

ORDERING INFORMATION

Device	Package	Shipping†
QSB363	T−3/4 2.50 x 2.00 100CB (Pb-Free, Halide Free)	1000 / Bulk Bag
QSB363GR	T−3/4 2.50 x 2.00 100EH (Pb-Free, Halide Free)	1000 / Tape & Reel
QSB363YR	T−3/4 2.50 x 2.00 100EJ (Pb-Free, Halide Free)	1000 / Tape & Reel
QSB363ZR	T−3/4 2.50 x 2.00 100EK (Pb-Free, Halide Free)	1000 / Tape & Reel

†For information on tape and reel specifications, including part orientation and tape sizes, please refer to our Tape and Reel Packaging Specification Brochure, BRD8011/D.

© Semiconductor Components Industries, LLC, 2005

ELECTRICAL/OPTICAL CHARACTERISTICS (Values are at T_A = 25°C unless specified otherwise).

Symbol	Parameter	Test Conditions	Min	Typ	Max	Unit
λ_P	Peak Sensitivity Wavelength		–	940	–	nm
Θ	Reception Angle		–	±12		°
I_{CEO}	Collector Dark Current	V_{CE} = 20 V, E_e = 0 mW/cm^2	–	–	100	nA
BV_{CEO}	Collector−Emitter Breakdown Voltage	I_C = 100 μA, E_e = 0 mW/cm^2	30	–	–	V
BV_{ECO}	Emitter−Collector Breakdown Voltage	I_E = 100 μA, E_e = 0 mW/cm^2	5	–	–	V
$I_{C(ON)}$	On−State Collector Current	V_{CE} = 5 V, E_e = 1 mW/cm^2, λ = 940 nm GaAs	1.0	1.5	–	mA
$V_{CE(SAT)}$	Collector−Emitter Saturation Voltage	I_C = 2 mA, E_e = 1 mW/cm^2, λ = 940 nm GaAs	–	–	0.4	V
t_r	Rise Time	V_{CE} = 5 V, I_C = 1 mA, RL = 1000 Ω	–	15	–	μs
t_f	Fall Time		–	15	–	μs

Product parametric performance is indicated in the Electrical Characteristics for the listed test conditions, unless otherwise noted. Product performance may not be indicated by the Electrical Characteristics if operated under different conditions.

TYPICAL PERFORMANCE CHARACTERISTICS

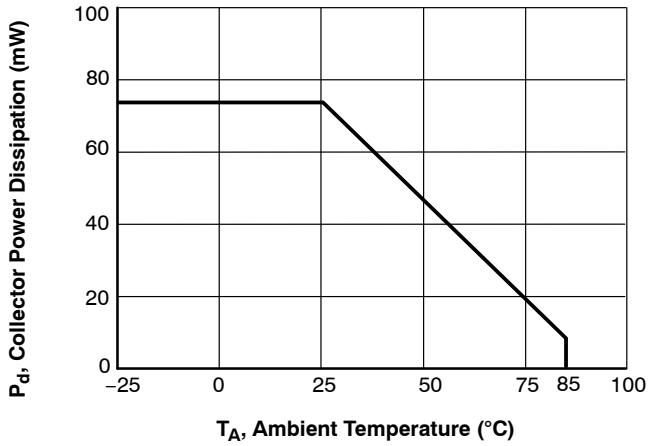

Figure 1. Collector Power Dissipation vs. Ambient Temperature

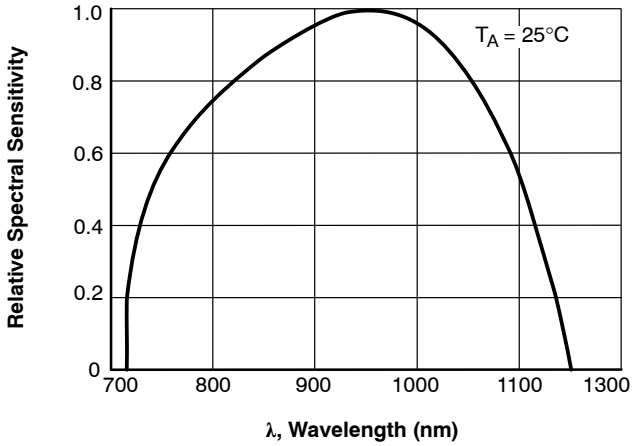

Figure 2. Spectral Sensitivity

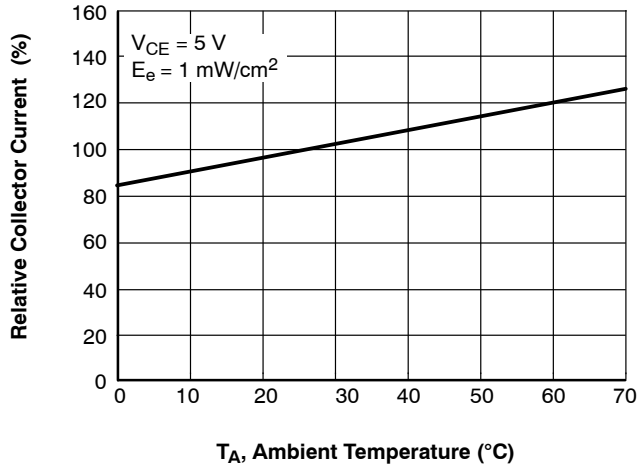

Figure 3. Relative Collector Current vs. Ambient Temperature

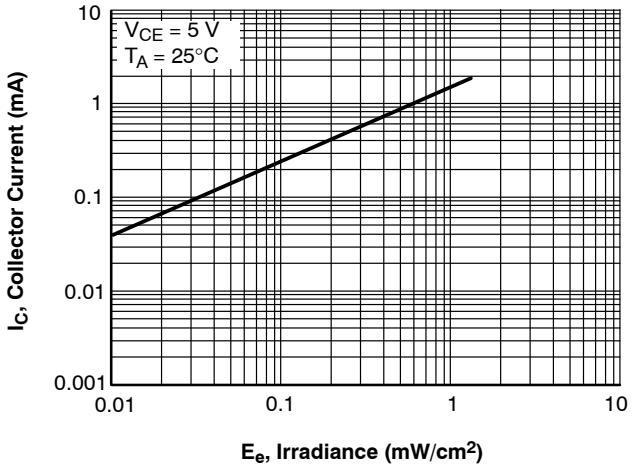

Figure 4. Collector Current vs. Irradiance

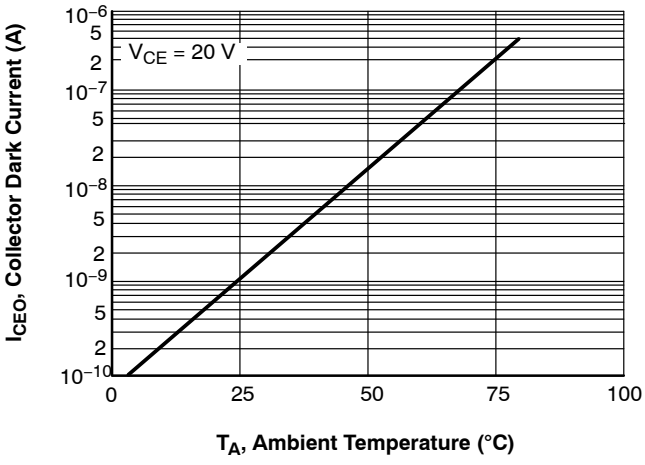

Figure 5. Collector Dark Current vs. Ambient Temperature

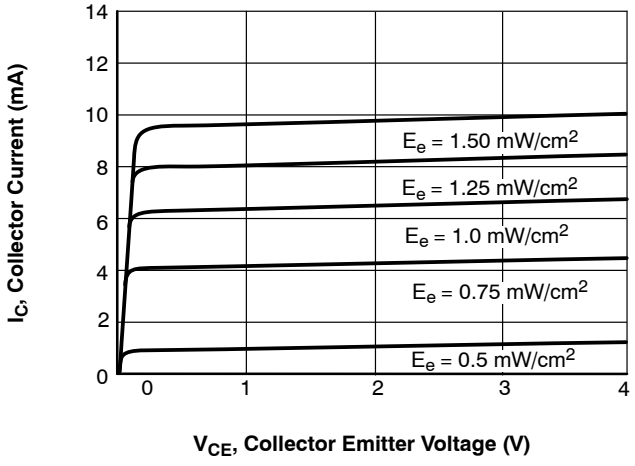

Figure 6. Collector Current vs. Collector Emitter Voltage

MECHANICAL CASE OUTLINE
PACKAGE DIMENSIONS

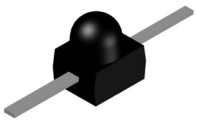

T−3/4 2.50x2.00
CASE 100CB
ISSUE A

DATE 14 SEP 2023

NOTES:

1. CONTROLLING DIMENSIONS: MILLIMETERS
2. DIMENSIONS DO NOT INCLUDE MOLD FLASH OR BURRS.
3. 2MM DETECTOR

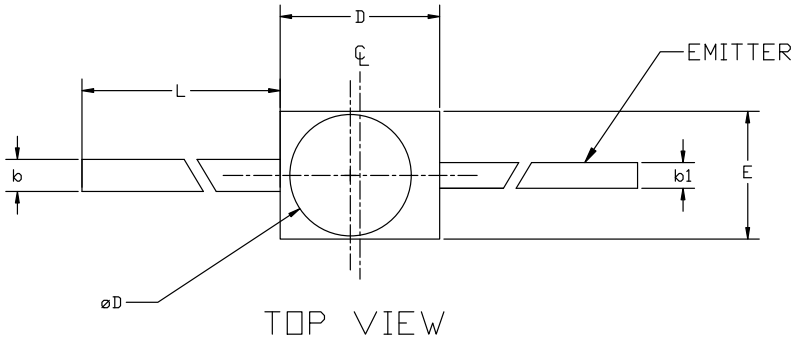

TOP VIEW

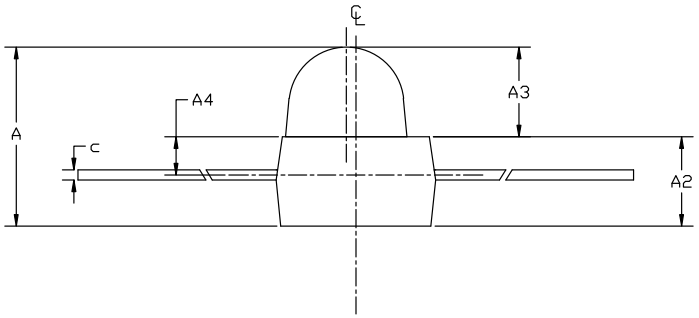

FRONT VIEW

DIM	MILLIMETERS		
	MIN.	NOM.	MAX.
A	2.50	2.70	2.90
A2	1.30	1.40	1.50
A3	1.30	1.40	1.50
A4		0.60 REF	
b	0.45	0.55	0.65
b1	0.35	0.45	0.55
c	0.10	0.15	0.25
D	2.30	2.50	2.70
E	1.80	2.00	2.20
L	7.00	---	---
øD	1.70	1.90	2.10

DOCUMENT NUMBER:	**98AON13435G**	Electronic versions are uncontrolled except when accessed directly from the Document Repository. Printed versions are uncontrolled except when stamped "CONTROLLED COPY" in red.	
DESCRIPTION:	**T−3/4 2.50x2.00**		**PAGE 1 OF 1**

onsemi and onsemi are trademarks of Semiconductor Components Industries, LLC dba **onsemi** or its subsidiaries in the United States and/or other countries. **onsemi** reserves the right to make changes without further notice to any products herein. **onsemi** makes no warranty, representation or guarantee regarding the suitability of its products for any particular purpose, nor does **onsemi** assume any liability arising out of the application or use of any product or circuit, and specifically disclaims any and all liability, including without limitation special, consequential or incidental damages. **onsemi** does not convey any license under its patent rights nor the rights of others.

© Semiconductor Components Industries, LLC, 2019

MECHANICAL CASE OUTLINE
PACKAGE DIMENSIONS

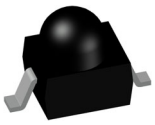

T−3/4 2.50x2.00
CASE 100EH
ISSUE O

DATE 14 SEP 2023

NOTES:

1. CONTROLLING DIMENSIONS: MILLIMETERS
2. DIMENSIONS DO NOT INCLUDE MOLD FLASH OR BURRS.
3. 2MM GULLWING DETECTOR.

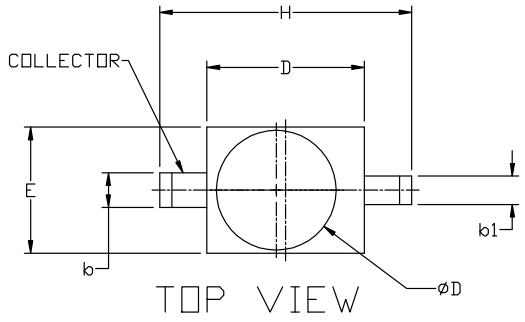

TOP VIEW

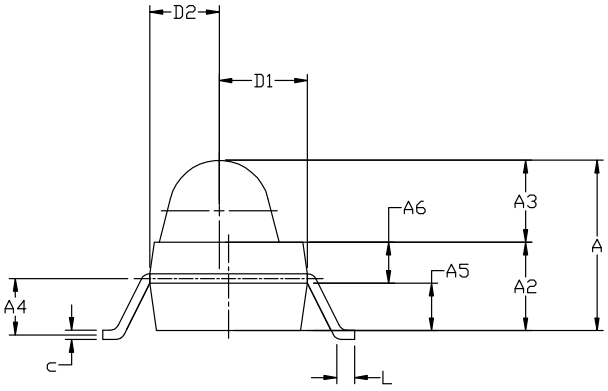

BOTTOM VIEW

DIM	MILLIMETERS		
	MIN.	NOM.	MAX.
A	2.500	2.700	2.900
A2	1.300	1.400	1.500
A3	1.200	1.300	1.400
A4	0.750	0.850	0.950
A5	0.650	0.750	0.850
A6	0.550	0.650	0.750
b	0.450	0.550	0.650
b1	0.350	0.450	0.550
c	0.100	0.150	0.200
D	2.300	2.500	2.700
D1	1.200	1.400	1.600
D2	0.900	1.100	1.300
E	1.800	2.000	2.200
H	3.800	4.000	4.200
L	0.200	0.300	0.400
øD	1.700	1.900	2.100
R1	0.700	0.800	0.900

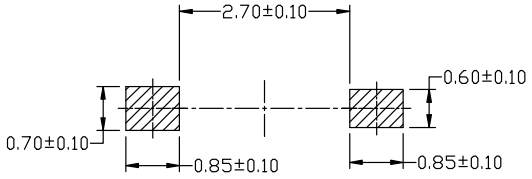

RECOMMENDED MOUNTING FOOTPRINT*

*FOR ADDITIONAL INFORMATION ON OUR Pb−FREE STRATEGY AND SOLDERING DETAILS, PLEASE DOWNLOAD THE ON SEMICONDUCTOR SOLDERING AND MOUNTING TECHNIQUES REFERENCE MANUAL, SOLDERRM/D.

DOCUMENT NUMBER:	**98AON57119H**	Electronic versions are uncontrolled except when accessed directly from the Document Repository. Printed versions are uncontrolled except when stamped "CONTROLLED COPY" in red.	
DESCRIPTION:	**T−3/4 2.50x2.00**		**PAGE 1 OF 1**

onsemi and ONSEMI. are trademarks of Semiconductor Components Industries, LLC dba **onsemi** or its subsidiaries in the United States and/or other countries. **onsemi** reserves the right to make changes without further notice to any products herein. **onsemi** makes no warranty, representation or guarantee regarding the suitability of its products for any particular purpose, nor does **onsemi** assume any liability arising out of the application or use of any product or circuit, and specifically disclaims any and all liability, including without limitation special, consequential or incidental damages. **onsemi** does not convey any license under its patent rights nor the rights of others.

© Semiconductor Components Industries, LLC, 2023

MECHANICAL CASE OUTLINE
PACKAGE DIMENSIONS

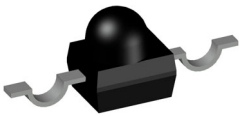

T−3/4 2.50x2.00
CASE 100EJ
ISSUE O

DATE 14 SEP 2023

NOTES:

1. CONTROLLING DIMENSIONS: MILLIMETERS
2. DIMENSIONS DO NOT INCLUDE MOLD FLASH OR BURRS.
3. 2MM YOKE DETECTOR.

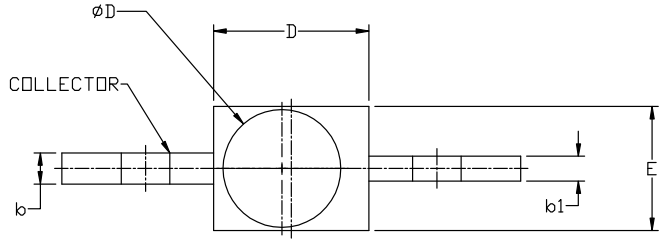

TOP VIEW

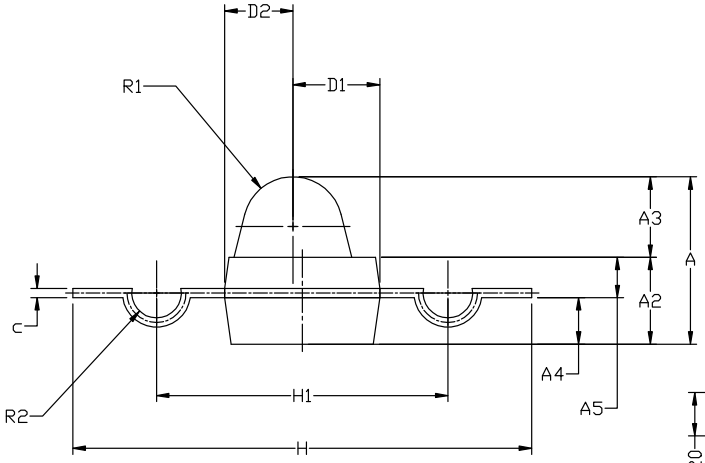

BOTTOM VIEW

DIM	MILLIMETERS		
	MIN.	NOM.	MAX.
A	2.500	2.700	2.900
A2	1.300	1.400	1.500
A3	1.200	1.300	1.400
A4	0.650	0.750	0.850
A5	0.550	0.650	0.750
b	0.450	0.550	0.650
b1	0.350	0.450	0.550
c	0.100	0.150	0.200
D	2.300	2.500	2.700
D1	1.200	1.400	1.600
D2	0.900	1.100	1.300
E	1.800	2.000	2.200
H	7.200	7.400	7.600
H1	4.500	4.700	4.900
øD	1.700	1.900	2.100
R1	0.700	0.800	0.900
R2	0.300	0.400	0.500

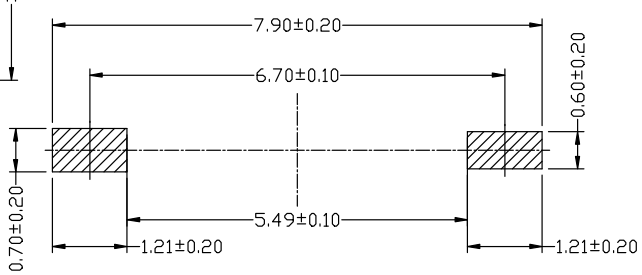

RECOMMENDED MOUNTING FOOTPRINT*

*FOR ADDITIONAL INFORMATION ON OUR Pb−FREE STRATEGY AND SOLDERING DETAILS, PLEASE DOWNLOAD THE ON SEMICONDUCTOR SOLDERING AND MOUNTING TECHNIQUES REFERENCE MANUAL, SOLDERRM/D.

DOCUMENT NUMBER:	**98AON57120H**	Electronic versions are uncontrolled except when accessed directly from the Document Repository. Printed versions are uncontrolled except when stamped "CONTROLLED COPY" in red.	
DESCRIPTION:	**T−3/4 2.50x2.00**		**PAGE 1 OF 1**

onsemi and ONSEMI. are trademarks of Semiconductor Components Industries, LLC dba **onsemi** or its subsidiaries in the United States and/or other countries. **onsemi** reserves the right to make changes without further notice to any products herein. **onsemi** makes no warranty, representation or guarantee regarding the suitability of its products for any particular purpose, nor does **onsemi** assume any liability arising out of the application or use of any product or circuit, and specifically disclaims any and all liability, including without limitation special, consequential or incidental damages. **onsemi** does not convey any license under its patent rights nor the rights of others.

© Semiconductor Components Industries, LLC, 2023

MECHANICAL CASE OUTLINE
PACKAGE DIMENSIONS

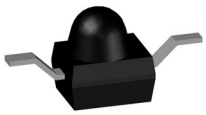

T−3/4 2.50x2.00
CASE 100EK
ISSUE O

DATE 14 SEP 2023

NOTES:

1. CONTROLLING DIMENSIONS: MILLIMETERS
2. DIMENSIONS DO NOT INCLUDE MOLD FLASH OR BURRS.
3. 2MM ZBEND DETECTOR.

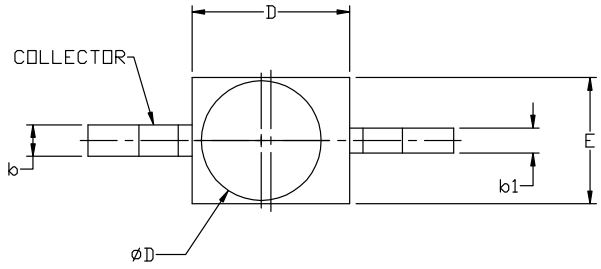

TOP VIEW

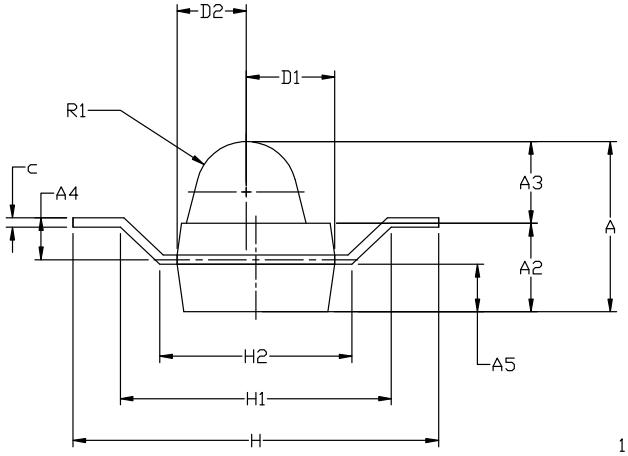

BOTTOM VIEW

DIM	MILLIMETERS		
	MIN.	NOM.	MAX.
A	2.500	2.700	2.900
A2	1.300	1.400	1.500
A3	1.200	1.300	1.400
A4	0.550	0.650	0.750
A5	0.650	0.750	0.850
b	0.450	0.550	0.650
b1	0.350	0.450	0.550
c	0.100	0.150	0.200
D	2.300	2.500	2.700
D1	1.200	1.400	1.600
D2	0.900	1.100	1.300
E	1.800	2.000	2.200
H	5.600	5.800	6.000
H1	4.100	4.300	4.500
H2	2.850	3.050	3.250
øD	1.700	1.900	2.100
R1	0.700	0.800	0.900

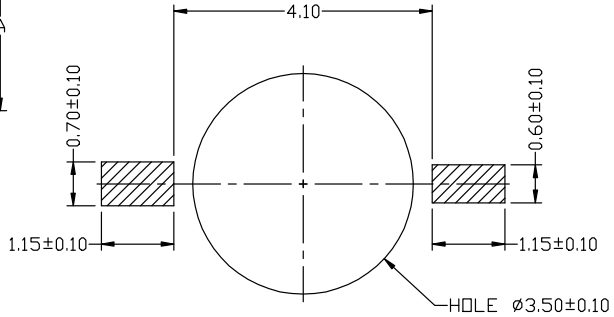

RECOMMENDED MOUNTING FOOTPRINT*

*FOR ADDITIONAL INFORMATION ON OUR Pb−FREE STRATEGY AND SOLDERING DETAILS, PLEASE DOWNLOAD THE ON SEMICONDUCTOR SOLDERING AND MOUNTING TECHNIQUES REFERENCE MANUAL, SOLDERRM/D.

DOCUMENT NUMBER:	**98AON57121H**	Electronic versions are uncontrolled except when accessed directly from the Document Repository. Printed versions are uncontrolled except when stamped "CONTROLLED COPY" in red.	
DESCRIPTION:	**T−3/4 2.50x2.00**		**PAGE 1 OF 1**

onsemi and ONSEMI. are trademarks of Semiconductor Components Industries, LLC dba **onsemi** or its subsidiaries in the United States and/or other countries. **onsemi** reserves the right to make changes without further notice to any products herein. **onsemi** makes no warranty, representation or guarantee regarding the suitability of its products for any particular purpose, nor does **onsemi** assume any liability arising out of the application or use of any product or circuit, and specifically disclaims any and all liability, including without limitation special, consequential or incidental damages. **onsemi** does not convey any license under its patent rights nor the rights of others.

© Semiconductor Components Industries, LLC, 2023

onsemi, ONSEMI , and other names, marks, and brands are registered and/or common law trademarks of Semiconductor Components Industries, LLC dba "**onsemi**" or its affiliates and/or subsidiaries in the United States and/or other countries. **onsemi** owns the rights to a number of patents, trademarks, copyrights, trade secrets, and other intellectual property. A listing of **onsemi**'s product/patent coverage may be accessed at www.onsemi.com/site/pdf/Patent−Marking.pdf. **onsemi** reserves the right to make changes at any time to any products or information herein, without notice. The information herein is provided "as−is" and **onsemi** makes no warranty, representation or guarantee regarding the accuracy of the information, product features, availability, functionality, or suitability of its products for any particular purpose, nor does **onsemi** assume any liability arising out of the application or use of any product or circuit, and specifically disclaims any and all liability, including without limitation special, consequential or incidental damages. Buyer is responsible for its products and applications using **onsemi** products, including compliance with all laws, regulations and safety requirements or standards, regardless of any support or applications information provided by **onsemi**. "Typical" parameters which may be provided in **onsemi** data sheets and/or specifications can and do vary in different applications and actual performance may vary over time. All operating parameters, including "Typicals" must be validated for each customer application by customer's technical experts. **onsemi** does not convey any license under any of its intellectual property rights nor the rights of others. **onsemi** products are not designed, intended, or authorized for use as a critical component in life support systems or any FDA Class 3 medical devices or medical devices with a same or similar classification in a foreign jurisdiction or any devices intended for implantation in the human body. Should Buyer purchase or use **onsemi** products for any such unintended or unauthorized application, Buyer shall indemnify and hold **onsemi** and its officers, employees, subsidiaries, affiliates, and distributors harmless against all claims, costs, damages, and expenses, and reasonable attorney fees arising out of, directly or indirectly, any claim of personal injury or death associated with such unintended or unauthorized use, even if such claim alleges that **onsemi** was negligent regarding the design or manufacture of the part. **onsemi** is an Equal Opportunity/Affirmative Action Employer. This literature is subject to all applicable copyright laws and is not for resale in any manner.

ADDITIONAL INFORMATION

TECHNICAL PUBLICATIONS:
Technical Library: www.onsemi.com/design/resources/technical−documentation
onsemi Website: www.onsemi.com

ONLINE SUPPORT: www.onsemi.com/support
For additional information, please contact your local Sales Representative at
www.onsemi.com/support/sales