ON Semiconductor
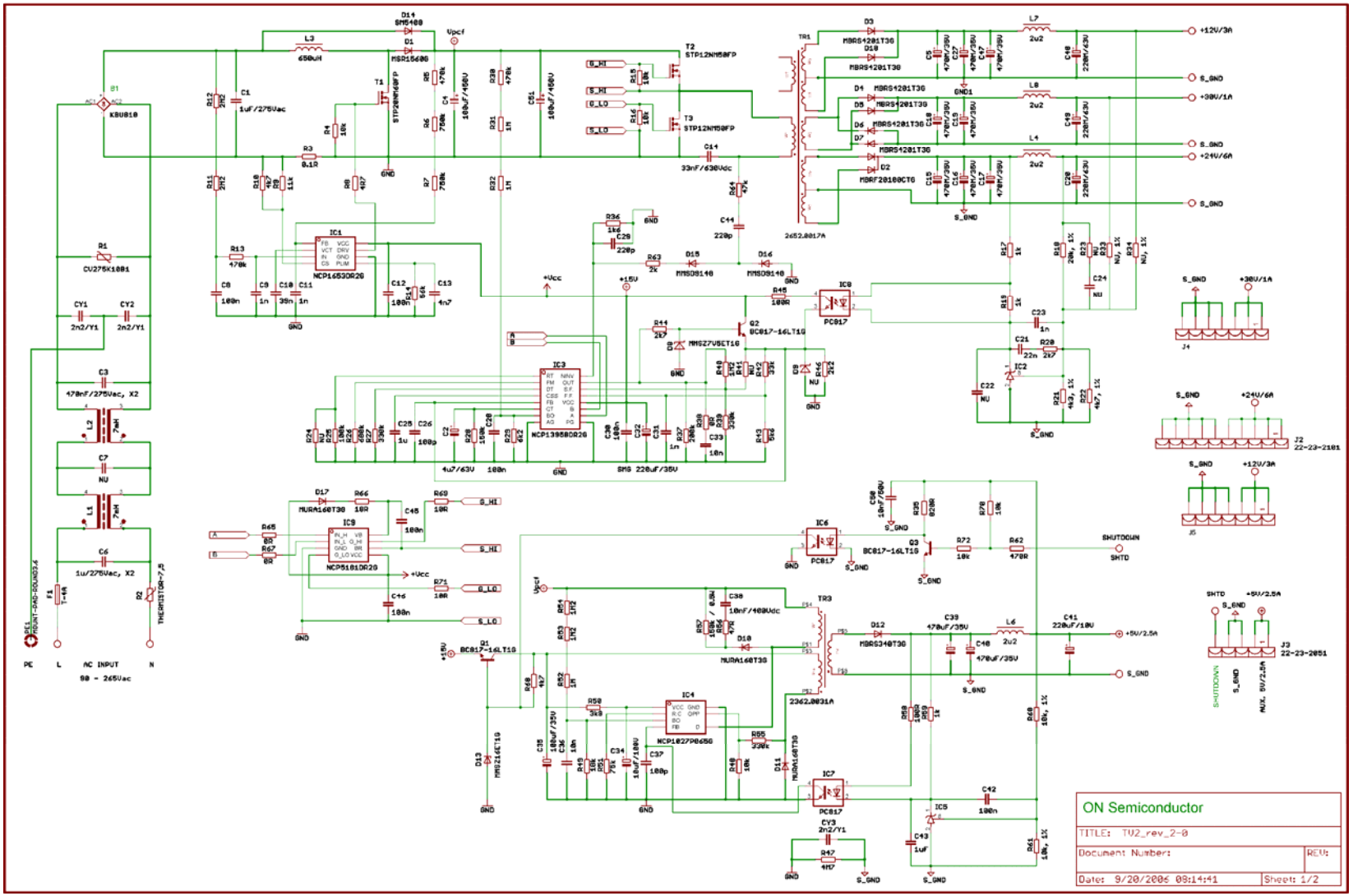
Schematic for the NCP1395 220W LCD TV Evaluation Board