ON Semiconductor

Schematic for the NCP1126DIPGEVB Evaluation Board

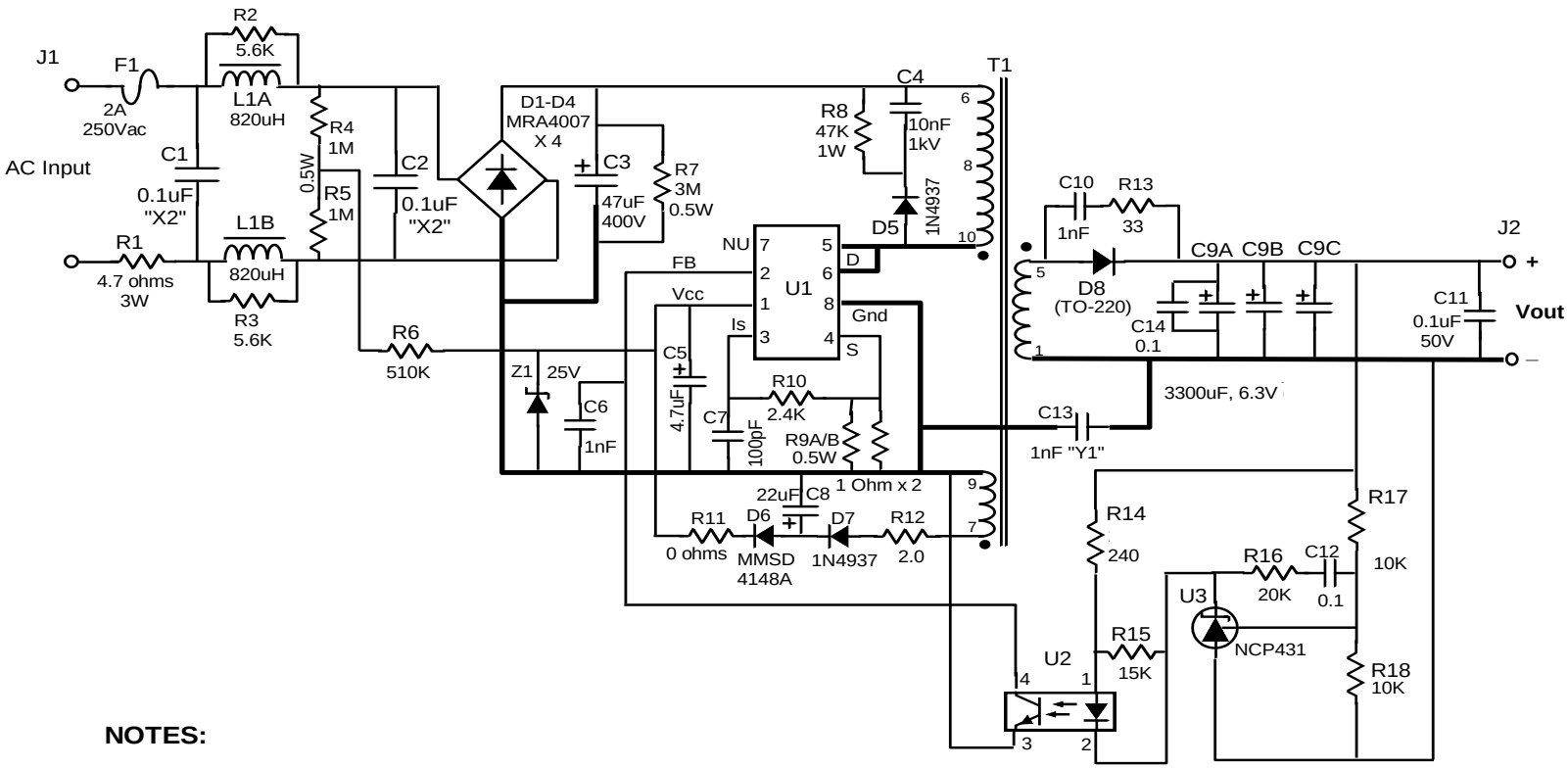

NOTES:

1. Crossed lines on schematic are NOT connected.
2. U2 is NEC PS2561L-1 or equivalent optocoupler (CTR > 50%).
3. R1 is for inrush limiting - use carbon comp or wire wound.
4. L1A/L1B are Wurth # 7447728215 inductors (820 uH, 500mA).
5. Output caps (C9A/B/C) are radial lead, low impedance types (UCC LXV series or similar).
6. R11 is for Vcc trimming (< 28Vmax), typically zero ohms.
7. R9A/B sets max output current.
8. Heavy schematic lines indicate recommended ground plane areas.