NB3x6x1xxG16QFNEVK

NB3x6x1xxG16QFN OmniClock Evaluation Kit Manual

ON Semiconductor®

www.onsemi.com

EVAL BOARD USER'S MANUAL

Devices Supported

- NB3H63143G (QFN16, 3.3V)
- NB3V63143G (QFN16, 1.8V)
- NB3H73113G (QFN16, 3.3V)

Introduction

NB3x6x1xxG16QFNEVK is an evaluation kit offering a convenient solution for evaluating QFN16 devices. Included are one main board, a daughter board, and a USB cable. The main board and daughter board are 4 layer boards with dedicated power and GND planes.

The daughter board plugs directly on to the main board using four 4−pin header connectors. These connectors route the signal, power and ground to the device on the daughter board. The two boards correctly plug into one another in only one orientation ensuring proper pin alignment. The daughter board has a 16QFN socket to test NB3x6x1xxG and NB3H73113G devices. A view of the main board with the 16QFN daughter board is shown in Figures 1 and 2.

The Clock Cruiser Software is the GUI software developed to be used with this evaluation kit, and can be downloaded for free from www.onsemi.com. It allows the user to set programmable parameters and generate solutions that fit application needs. These solutions can then be programmed in to device's OTP memory or be temporarily written into device registers for evaluation. For more information on using the GUI, refer to Clock Cruiser User Guide.

Part Description

The NB3x6x1xxG and NB3H73113G, which are members of the OmniClock family, are versatile user programmable clock generators designed by ON Semiconductor with customer experience in mind. These devices are tailored to fit into an extensive array of applications including wearable technology, smart phones, digital cameras, E−books, portable electronics, and Internet of Things. The NB3H designated parts are powered by 3.3V and 2.5V supplies while NB3V parts support 1.8V operation.

These devices are One Time Programmable (OTP), low power PLL based clock generators that accept fundamental mode parallel resonant crystals of up to 50 MHz or a single ended LVCMOS/LVTTL reference clock input of up to 200 MHz. The outputs can be configured as either three single ended LVCMOS/LVTTL outputs or a combination of one single ended output and one differential LVPECL/LVDS/HCSL/CML output. The generated clock output's frequency can range between 8 kHz to 200 MHz.

Other programmable parameters include internal crystal load capacitor, drive strength for LVCMOS outputs, output frequency modulation controls (type, depth, modulation rate), output phase inversion, and PLL bypass mode. The devices are fully functional between −40°C to +85°C.

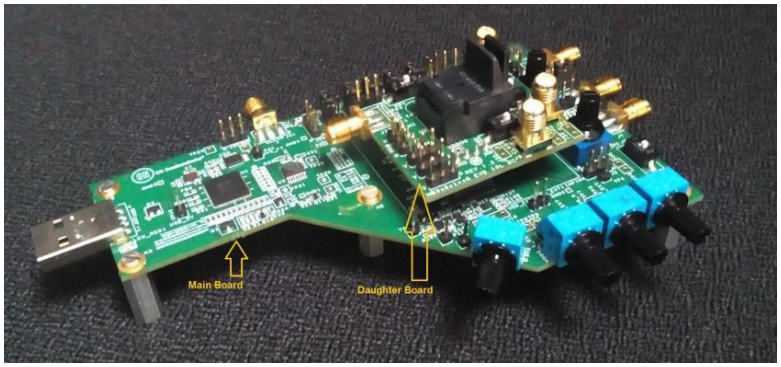

Figure 1. 45° View of Main Board with QFN16 Daughter Board

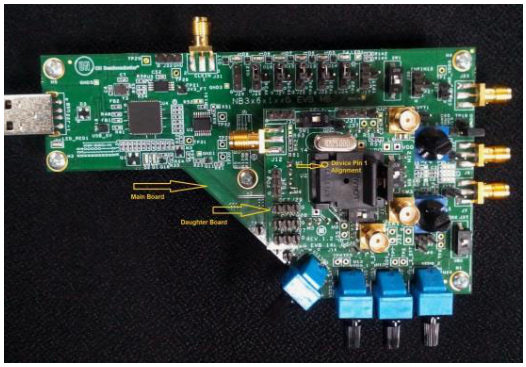

Figure 2. Top View of Main Board with QFN16 Daughter Board

© Semiconductor Components Industries, LLC, 2017

March, 2017 − Rev. 3

Publication Order Number:
EVBUM2308/D

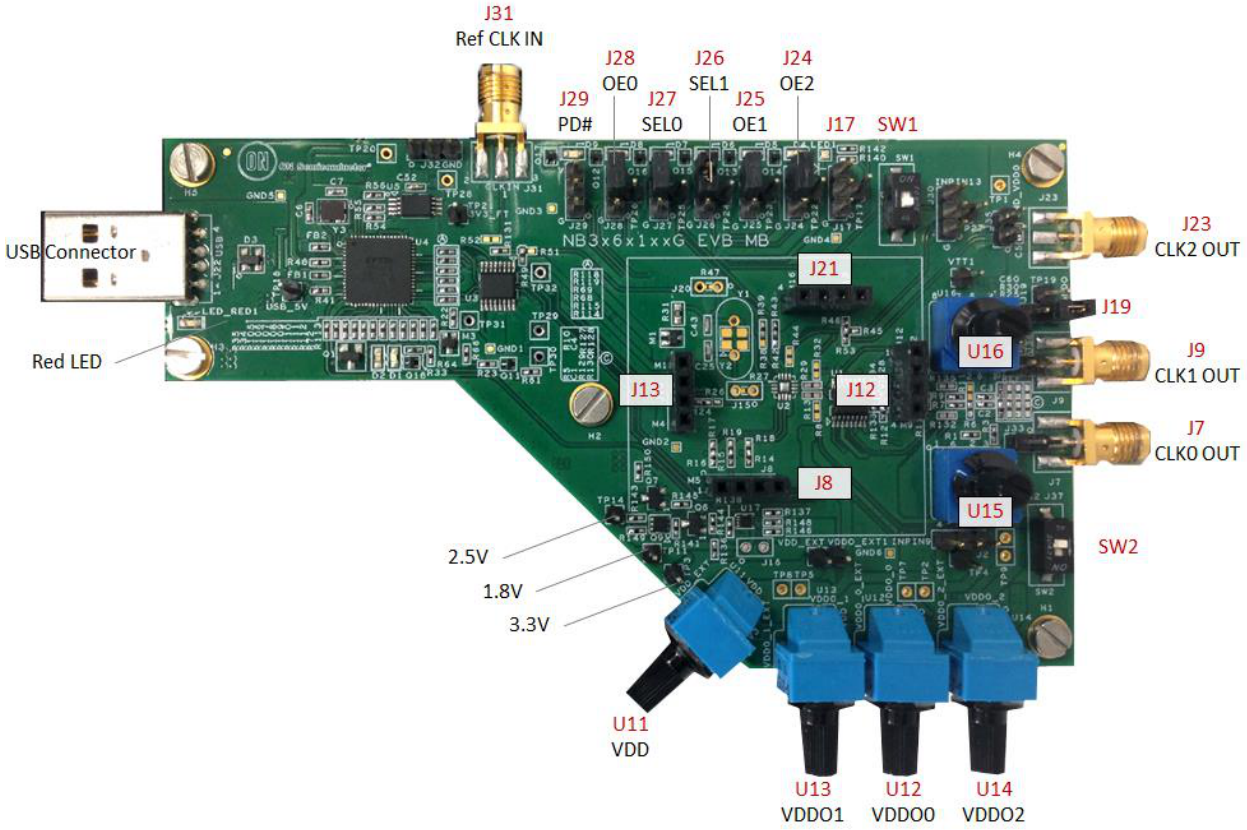

Figure 3. Main Board

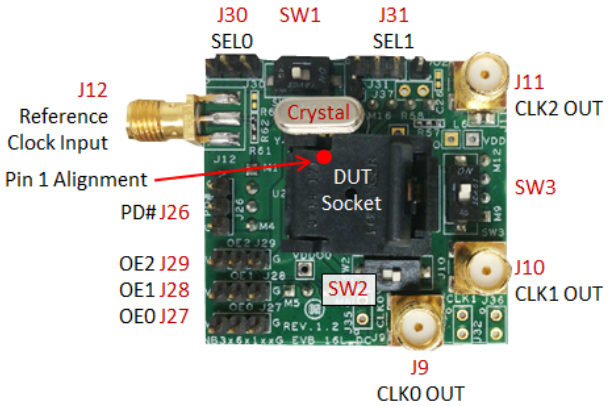

Figure 4. 16QFN Daughter Board

Step 1: Hardware Setup

Note: Skip this section if device has already been programmed.

Main Board

1. Securely connect the daughter board to the main board by lining up all four 4−pin connectors (J8, J12, J13, J21). The daughter board can only be plugged in to the main board correctly in one orientation.
2. Make sure all SMA cables are unplugged from main board and daughter board.
3. Jumpers:
   a. Use jumpers to provide connection as referenced in table below: (Pin 1 is indicated by a circle)

Jumper No	J26 (SEL1)	J27 (SEL0)	J24 (OE2)	J25 (OE1)	J28 (OE0)	J29 (PD#)	J19
Pin connection	2 and 3	2 and 3	2 and 3	2 and 3	2 and 3	OPEN	2 and 3

4. Switches:
   b. Slide switches to the position referenced in table below: (ON position is indicated via lettering on switch)

Switch No	SW1	SW2
Position	ON	ON

5. Rotary Switches:
   c. Turn knob on rotary switches as shown in table below: (The position number will be displayed in a slit on the knob)

Jumper No	U11	U12	U13	U14	U15	U16
Dial Display	1	1	1	1	1	1

Daughter Board

1. Jumpers:
   a. Use Jumpers to provide connection as referenced in table below: (Pin 1 is indicated by a circle)

Jumper No	J31 (SEL1)	J30 (SEL0)	J29 (OE2)	J28 (OE1)	J27 (OE0)	J26 (PD#)
Shorting Link Position	OPEN	OPEN	OPEN	OPEN	OPEN	OPEN

2. Switches:
   b. Slide switches to the position referenced in table below: (ON position is indicated via lettering on switch)

Switch No	SW1	SW2	SW3
Position	ON	ON	ON

3. Ensure that Crystal (XTAL) is in holder.
4. Place NB3H63143G or NB3V63143G in DUT socket U2. For device pin 1 alignment refer to Figure 4.

Step 2: Device Programming

Note: Skip this section if device has already been programmed

1. Download and install Clock Cruiser GUI Software to a computer that meets or exceeds minimum requirements found on Clock Cruiser User guide.
2. Connect the evaluation kit to an USB port using included USB cable. A LED next to the USB connector will glow red, indicating that +5 V supply has been applied to EVB.
3. Run the Clock Cruiser GUI software. A blue LED (D9) will light up when a connection is established, this LED will blink periodically as activity is being conducted.
4. Follow the Clock Cruiser User Guide for detailed instructions on navigating through the program to properly configure device.
5. In the device programming screen, a table indicates the summary of configurations that were selected. Verify that the Hardware Connected indicator is green and that there is no error in the log.
6. Set appropriate device VDD/VDDO levels.
   a. Set VDD and VDDO for each output by using the four rotary switches (U11, U12, U13, and U14) located on the main board to match device configuration. Make sure that VDDO's are less than or equal to VDD. The following table shows which on−board LDO voltage is selected depending on the switch position (see table below).

<table>
<tr><th rowspan="2">Rotary Switch</th><th rowspan="2">Line</th><th colspan="4">Voltage for Each Switch Position</th></tr>
<tr><th>1</th><th>2</th><th>3</th><th>4</th></tr>
<tr><td>U11</td><td>VDD</td><td>+3.3 V</td><td rowspan="4">+2.5 V</td><td rowspan="4">+1.8 V</td><td rowspan="4">external source</td></tr>
<tr><td>U12</td><td>VDDO0</td><td rowspan="3">VDD</td></tr>
<tr><td>U13</td><td>VDDO1</td></tr>
<tr><td>U14</td><td>VDDO2</td></tr>
</table>

7. Program the device permanently by selected [Program OTP Memory] or write to device registers by clicking [Write to Registers]. In the case Write to Register function is utilized, powering down evaluation kit (i.e. unplugging USB cable) will reset device registers.

Step 3: Device Evaluation

Select Input Clock

Depending on the programmed configuration, select one of the following input clock references.

1. Crystal (XTAL): The evaluation kit comes equipped with a 25 MHz fundamental crystal on the daughter board. If a different frequency is required, place new crystal in holder. Device can accept 3 MHz to 50 MHz crystal references. Please follow the additional step below to properly use Crystal as input reference:
   a. Place SW1 on daughter board in the OFF position.
2. External Clock Reference: To use an external clock reference, connect external clock to SMA connector J31 on the main board. Device can accept 3 MHz to 200 MHz clock references, reference device datasheet for appropriate input levels.

Please follow additional steps below to properly use an external clock input source:

a. Close out GUI software to stop communication between GUI and EVB.
b. Unplug and Re−plug EVB to USB port.
c. Manually supply power to device with PD# pin. (See section *Controlling the Device (GPIO pins)* for proper use of PD# pin)

Note: External Clock can only be used with devices that have been OTP'd.

Select Output Termination

DUT outputs are routed to three SMA connectors on the main board (J7, J9, and J23) to provide termination for CLK0, CLK1, and CLK2 respectively. By turning rotary switches U15 and U16, the board will automatically terminate the programmed output level for CLK0 and CLK1, to its respective output termination in table below.

Rotary Switch Position	U15 output for CLK0	U16 output for CLK1
1	LVCMOS	LVCMOS
2	HCSL	HCSL
3	LVPECL	LVPECL
4	CML	CML
5	LVDS	LVDS

Note: CLK2 output only supports LVCMOS levels; therefore its termination is fixed.

Interfacing with Test Equipment

Monitor DUT outputs from main board with an oscilloscope with either SMA connectors or on board jumpers.

1. To use SMA connectors (J7, J9, J23), use oscilloscopes Hi−Z feature or a Hi−Z probe to monitor outputs. (Ensure probe is properly grounded)
2. To use Jumpers (J33, J34, J35), use a Hi−Z probe connected to jumper pin marked 0. (Ensure probe is properly grounded)

Both options can be used to monitor all three DUT outputs.

Controlling the Device (GPIO pins)

The device has multiple functions that can be programmed via control pins, below is a list of control pins and their respective SMA connector.

OE: Pin used to enable or disable outputs individually. The main and daughter boards both have OE pins that can be easily accessed via jumpers.

Main board: CLK0=J28, CLK1=J25, CLK2=J24
Daughter board: CLK0=J27, CLK1=J28, CLK2=J29

OE	Function
0	CLK Disabled
1	CLK Enabled

PD#: Pin used to power down device, this pin can be controlled either with J29 (main board) or J26 (daughter board). The logic state of this signal corresponds to the LED (D9) on the main board.

PD#	Function	LED (D9)
0	Device Powered Down	Off
1	Device Powered Up	On

SEL: Pin is used to select between the available four output configurations that can be stored in devices OTP memory.

Main board: SEL0=J27, SEL1=J26
Daughter board: SEL0=J30, SEL1=J31

SEL0	SEL1	Output Configuration
L	L	I
L	H	II
H	L	III
H	H	IV

For NB3x73113G devices, SEL is replaced with SCLK and SDATA signals for I2C / SMBus communication. These devices support one configuration, which can be modified, by writing device registers with a new configuration file created from the Clock Cruiser Software, a freely down loadable GUI software available on www.onsemi.com.

Programming Reminders

While communicating between the GUI and device ensure the following:

Main Board
1. Switches SW1 and SW2 are set to the ON state.
2. Rotary switches U11, U12, U13, U14, U15 and U16 are in the “1” position.
3. All SMA cables are detached from test equipment.

Daughter Board
1. Switches SW1, SW2 and SW3 are set to the ON position.
2. All SMA cables are detached from test equipment.

When re−configuring temporary device registers ensure the following:
1. Re−initiate main board hardware setup.
2. Re−initiate daughter board hardware setup.
3. Re−initiate GUI by either returning to previous page with [back] button or restarting GUI software.

Note: Even if device OTP memory has been programmed, device registers can be used to write other solutions for evaluation.

APPENDIX

Unpopulated Boards

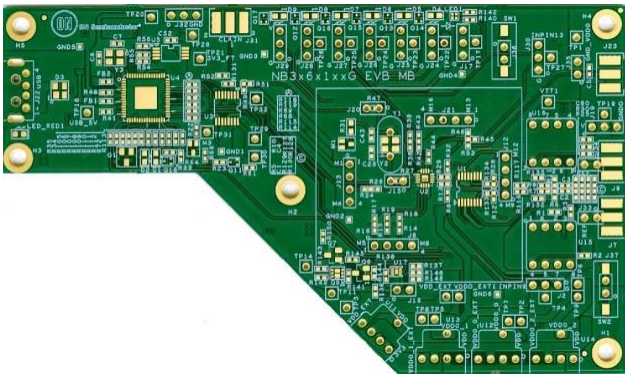

Figure 5. Main Board Top View

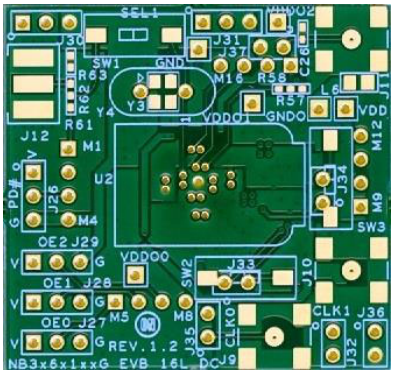

Figure 7. QFN16 Daughter Board Top View

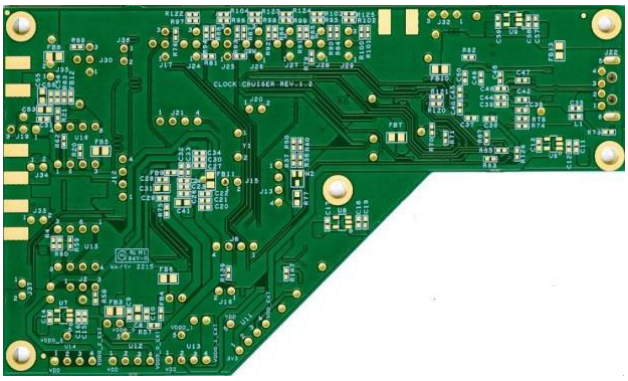

Figure 6. Main Board Bottom View

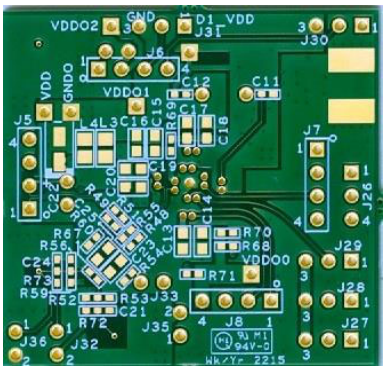

Figure 8. QFN16 Daughter Board Bottom View

OUTPUT TERMINATION

HCSL	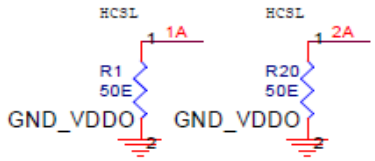
CML	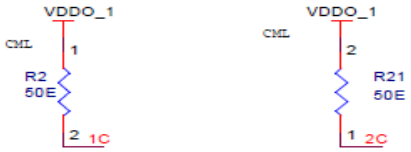
LVPECL	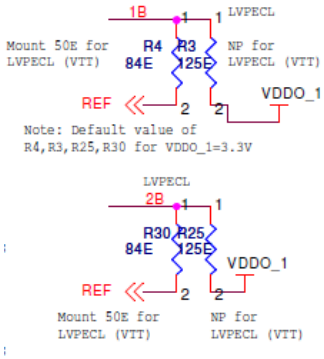
LVDS	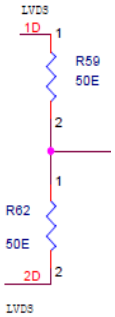

Main Board Schematic

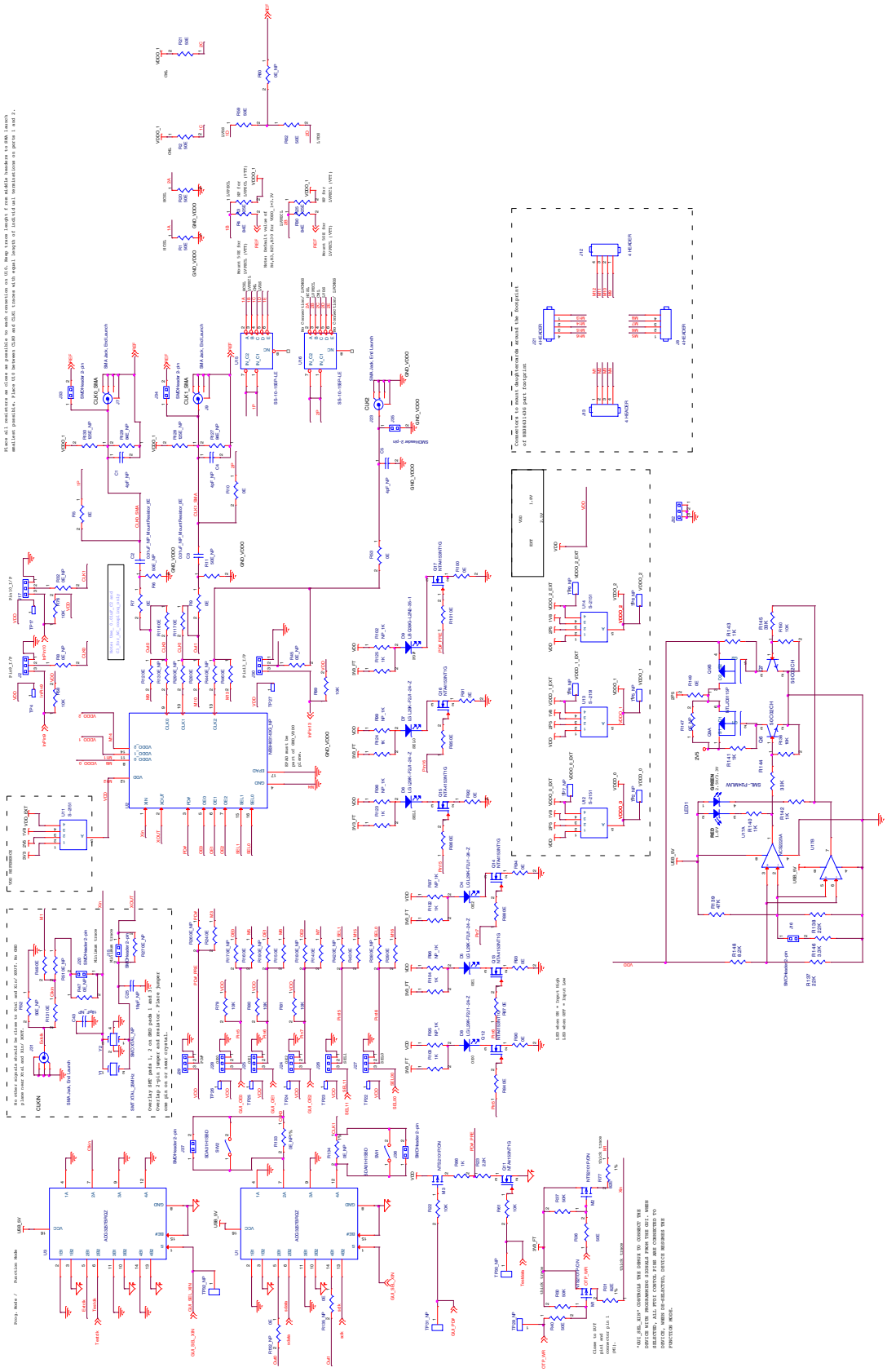

Figure 9. Main Board Schematic (1 of 3)

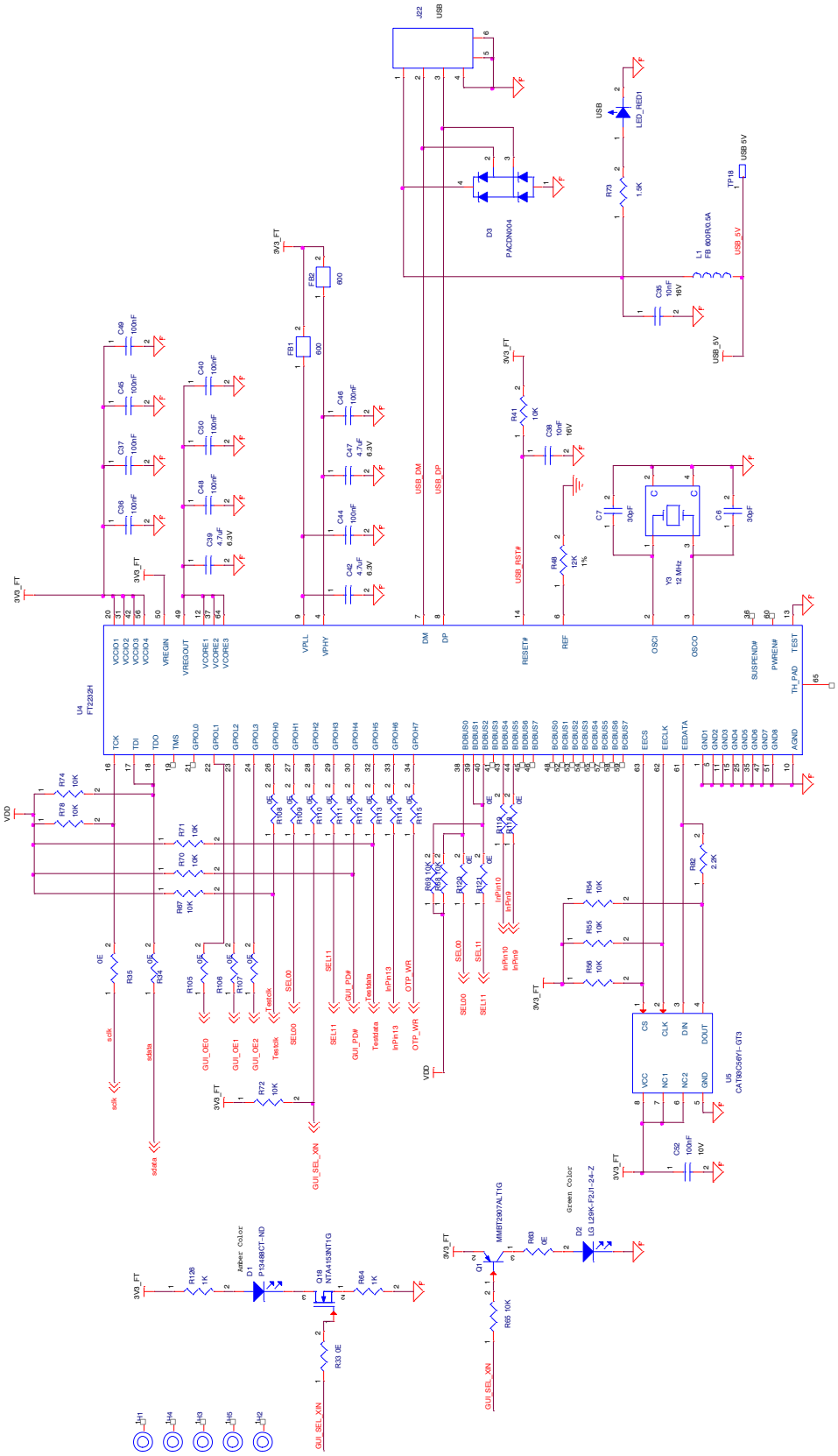

Figure 10. Main Board Schematic (2 of 3)

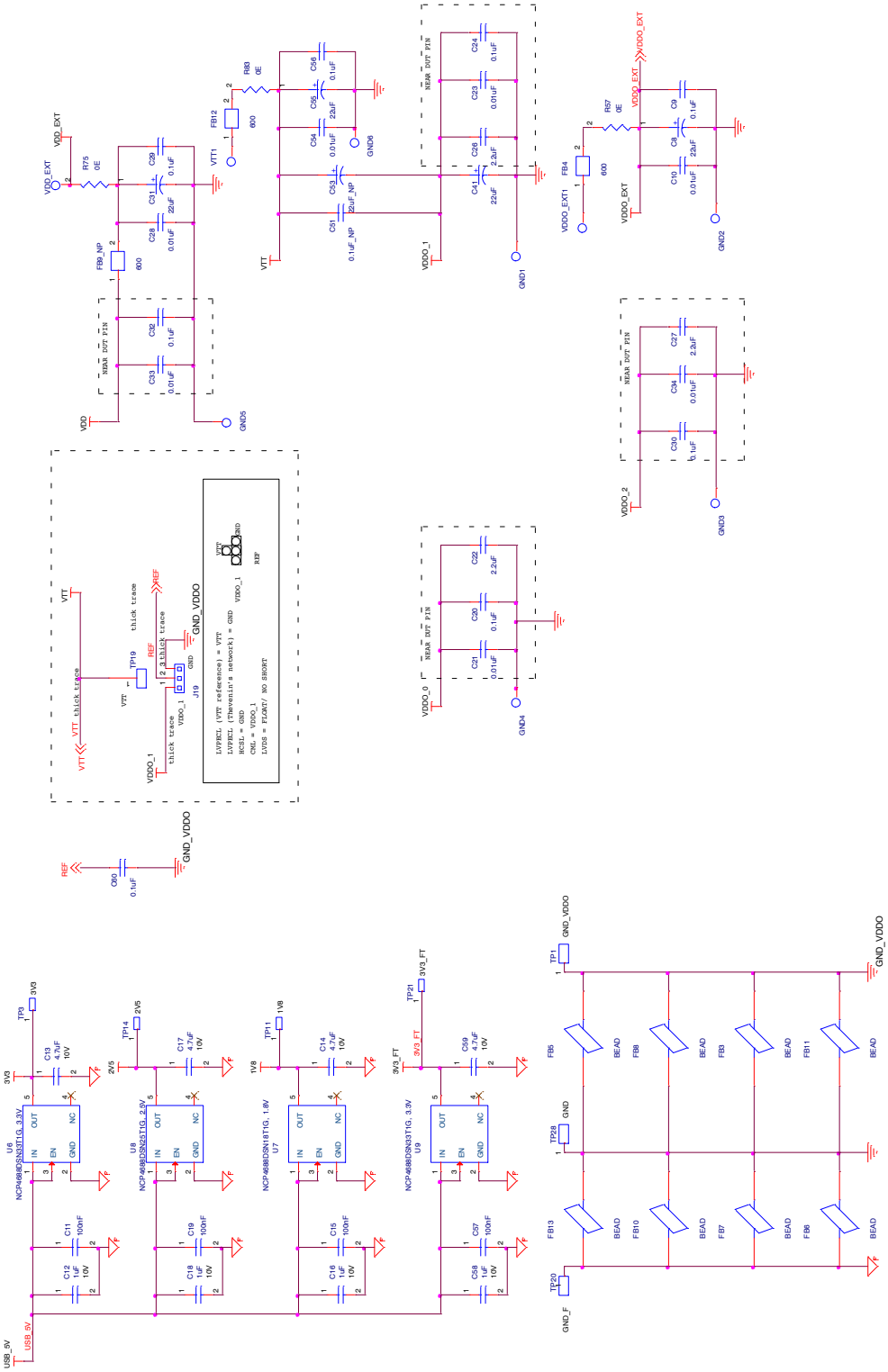

Figure 11. Main Board Schematic (3 of 3)

16QFN Daughter Board Schematic

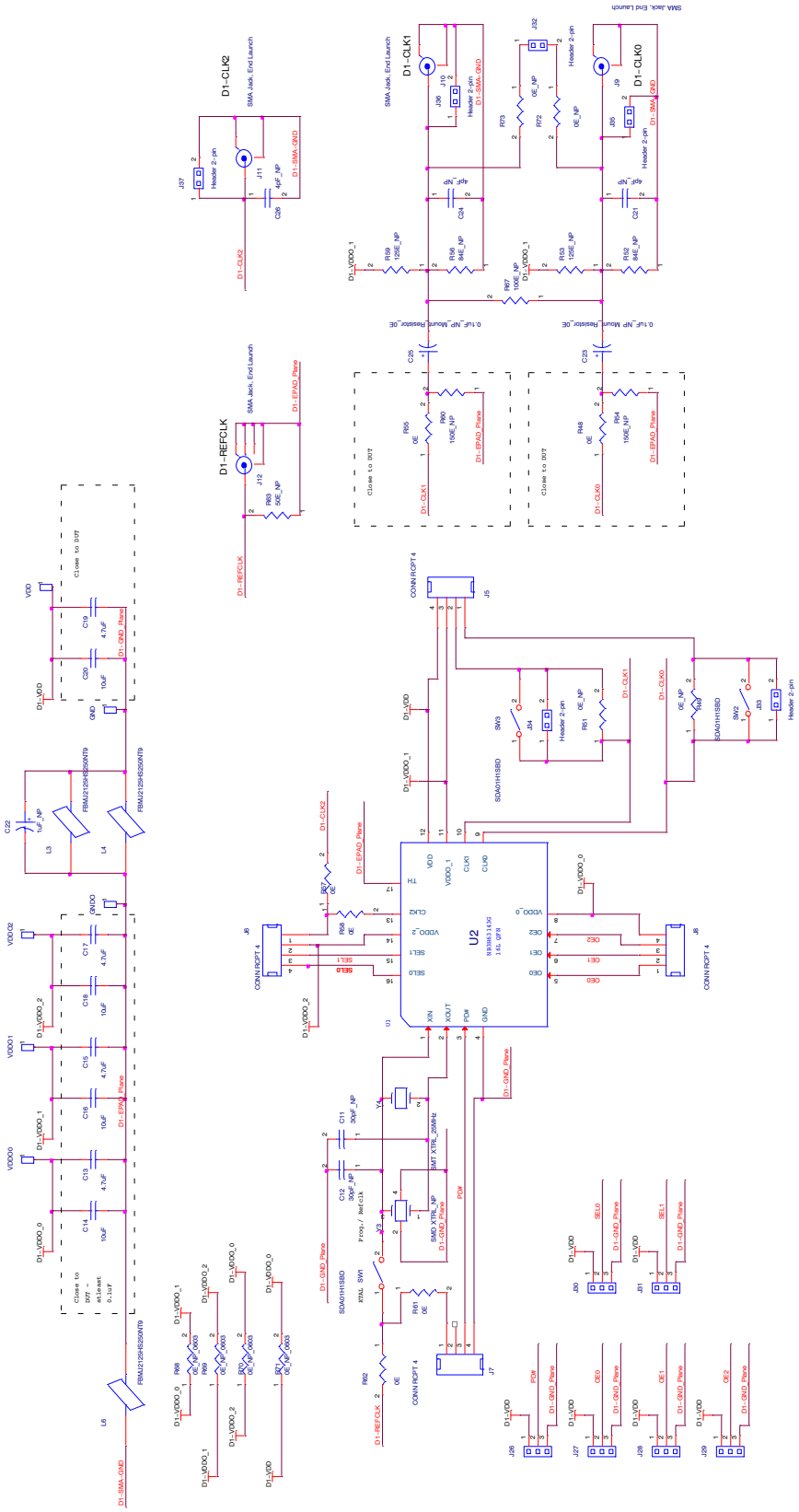

Figure 12. 16QFN Daughter Board Schematic

BILL OF MATERIAL MAIN BOARD

Sl No	Reference	Part	PCB Footprint	Vendor	Vendor PN	Manufac-turer	Manufac-turer Part#	Description	Qty	Notes / Re-marks
1	C2,C3	0.01 μF _Mount R0E	R0402	DigiKey	541−0.0JCT−ND	Vishay Dale	CR-CW0402000 0Z0ED	RES SMD 0.0 OHM JUMPER 1/16W	2	
2	C8,C31, C41,C55	22 μF	C0603	DigiKey	587−2085−1−ND	Taiyo Yuden	AMK107BJ2 26MA−T	CAP CER 22UF 4V 20% X5R 0603	4	
3	C9,C20, C24,C29, C30,C32, C56,C60	0.1 μF	C0402	DigiKey	587−1227−1−ND	Taiyo Yuden	LMK105BJ1 04KV−F	CAP CER 0.1UF 10V 10% X5R 0402	8	
4	C10,C21, C23,C28, C33,C34, C54	0.01 μF	C0402	DigiKey	490−1312−1−ND	Murata	GRM155R7 1E103KA01-D	CAP CER 10000PF 25V 10% X7R 0402	7	
5	C11,C15, C19,C36, C37,C40, C44,C45, C46,C48, C49,C50, C52,C57	100 nF	C0402	DigiKey	478−1129−1−ND	AVX	0402ZD104-KAT2A	CAP CER 0.1UF 10V 10% X5R 0402	14	
6	C12,C16, C18,C58	1 μF	C0402	DigiKey	490−5409−1−ND	Murata	GRM155R6 1A105ME15-D	CAP CER 1UF 10V 20% X5R 0402	4	
7	C13,C14, C17,C59	4.7 μF	C0402	DigiKey	490−5408−1−ND	Murata	GRM155R6 0J475ME87-D	CAP CER 4.7UF 6.3V 20% X5R 0402	4	
8	C22,C26, C27	2.2 μF	C0402	DigiKey	490−4518−1−ND	Murata	GRM155R6 0G225ME15-D	CAP CER 2.2UF 4V 20% X5R 0402	3	
9	C35,C38	10 nF	C0402	DigiKey	478−1114−1−ND	AVX	0402YC103-KAT2A	CAP CER 10000PF 16V 10% X7R 0402	2	
10	C39,C42, C47	4.7 μF	C0402	DigiKey	490−5408−1−ND	Murata	GRM155R6 0J475ME87-D	CAP CER 4.7UF 6.3V 20% X5R 0402	3	
11	D1	LED_amber	LED_0603	DigiKey	P13488CT−ND	Panasonic	LNJ414K82-RA	LED AMBER HIGH BRIGHT USS 0603	1	
12	D2,D4,D5, D6,D7,D8	LED_green−LG L29K−F2J1−24−Z	LED_0603	DigiKey	475−3118−1−ND	OSRAM Op-to Semicon-ductors Inc	LG L29K−F2J1−24−Z	LED SMARTLED 570NM GREEN 0603	6	
13	D3	PACDN004S-R	SOT−143	Mouser	748−PACDN0 04SR	ON Semi			1	
14	D9	LB Q39G−L2N2 −35−1	LED_0603	DigiKey	475−2816−1−ND	OSRAM Op-to Semicon-ductors Inc	LB Q39G−L2-N2−35−1	LED CHIPLED BLUE 470NM 0603 SMD	1	
15	FB1,FB2, FB4,FB12	600	L0402	DigiKey	490−1006−1−ND	Murata	BLM15AG60 1SN1D	FERRITE CHIP 600 OHM 300MA 0402	4	
16	FB3,FB5, FB6,FB7, FB8,FB10, FB11,FB13	BEAD	L0805	DigiKey	587−1767−1−ND	Taiyo Yuden	FB-MJ2125HS2 50NT	FERRITE BEAD 25 OHM 0805	8	
17	GND1, GND2, GND3, GND4, GND5, GND6	T POINT R	TP_30_30	NA	NA	NA	NA	NA	6	Test Point
18	H1,H2,H3, H4,H5	.129 Hole in .240 Round Pad	MH_240_1 28	NA	NA	NA	NA	NA	5	Round Pad
19	J2,J17,J19, J24,J25, J26,J27, J28,J29, J30,J32	Header 3−pin	berg_1x3_ 2p54	DigiKey	3M9448−ND	3M	961103−640 4−AR	CONN HEADER VERT SGL 3POS GOLD	11	
20	J7,J9,J23, J31	SMA−J−P−H−ST−EM1−ND	con_sma_e-dge	DigiKey	SMA−J−P−H−ST−EM1	Samtec Inc	SMA−J−P−H−ST−EM1	CONN SMA JACK 50 OHM EDGE MNT	4	
21	J8,J12, J13,J21	4 HEADER	berg_1x4_ 2p54	DigiKey	S7037−ND	Sullins Con-nector Solu-tions	PP-PC041LF-BN−RC	Connector Header 4 Position 0.100” (2.54mm) Gold Through Hole	4	

BILL OF MATERIAL MAIN BOARD

Sl No	Reference	Part	PCB Footprint	Vendor	Vendor PN	Manufac-turer	Manufac-turer Part#	Description	Qty	Notes / Re-marks
22	J15,J16, J20,J33, J34,J35, J36,J37	SMDHeader 2−pin	berg_1x2_ 2p54	DigiKey	3M5350−ND	3M	151204−2320−RB	CONN 4POS 2MM HEADER DL STR SMD	8	
23	J22	Conn, USB−B, SMT	USB_A_-PLUG_RA	DigiKey	WM17117−ND	Molex	480370001	Connector Plug USB TypeA 2.0 4 Position Through Hole, Right Angle, Horizontal	1	
24	LED_RED1	LED, Green	LED_0603	DigiKey	P11475CT−ND	Panasonic	LNJ212R82-RA	LED RED TSS TYPE 0603	1	
25	LED1	846−1040−1−ND	LED_SM-L_DUO	DigiKey	846−1040−1−ND	Rohm Semicon-ductor	SML−P24MUWT86	LED PICOLED DUAL YWGN/RED 1010	1	
26	L1	FB 600R/0.5A	L0402	DigiKey	490−5258−1−ND	Murata	BLM18KG601SN1D	FERRITE CHIP 600 OHM 1300MA 0603	1	
27	M1,M2,M3	NTS2101P/ ON	sot−323	DigiKey	NTS2101PT1-GOSCT−ND	ON Semi	NTS2101PT1G	MOSFET P−CH 8V 1.4A SOT−323	3	
28	Q1	MMBT2907A-LT1G	sot_23	DigiKey	MMBT2907AL-T3GOSCT−ND	ON Semi	MMBT2907-ALT3G	TRANS PNP 60V 0.6A SOT−23	1	
29	Q6,Q7	50C02CH−TL−E	sot−23	DigiKey	50C02CH−TL−EOSCT−ND	ON Semi	50C02CH−TL−E	TRANS NPN 50V 0.5A CPH3	2	
30	Q9	NTLJD3115P-T1G	6−WDFN (2X2)	DigiKey	NTLJD3115PT1GOSCT−ND	ON Semi	NTLJD3115-PT1G	MOSFET 2P−CH 20V 2.3A 6−WDFN	1	
31	Q11,Q12, Q13,Q14, Q15,Q16, Q17,Q18	NTA4153NT1G	sot−416	DigiKey	NTA4153NT1-GOSCT−ND	ON Semi	NTA4153NT1G	MOSFET N−CH 20V 915MA SOT−416	8	
32	R1,R2, R20,R21, R36,R40, R59,R62	50E	R0402	DigiKey	P49.9LDKR−ND	Panasonic	ERJ−2RKF49R9X	RES SMD 49.9 OHM 1% 1/10W 0402	8	
33	R3,R25	125E	R0402	DigiKey	P124LCT−ND	Panasonic	ERJ−2RKF1240X	RES SMD 124 OHM 1% 1/10W 0402	2	
34	R4,R30	84E	R0402	DigiKey	P84.5LCT−ND	Panasonic	ERJ−2RKF84R5X	RES SMD 84.5 OHM 1% 1/10W 0402	2	
35	R5,R10, R12,R14, R15,R16, R24,R28, R33,R34, R35,R39, R43,R46, R49,R57, R63,R75, R83,R84, R85,R86, R87,R88, R90,R91, R92,R93, R94,R100, R101,R105,-R106,R107,-R108,R109,-R110,R111, R112,R113, R114,R115, R118,R119, R120,R121, R131	0E	R0402	DigiKey	541−0.0JCT−ND	Vishay Dale	CR-CW04020000Z0ED	RES SMD 0.0 OHM JUMPER 1/16W	47	
36	R7,R9,R53	0E	R0402	DigiKey	541−0.0JCT−ND	Vishay Dale	CR-CW04020000Z0ED	RES SMD 0.0 OHM JUMPER 1/16W	3	
37	R116,R117, R149	0E	R0402	DigiKey	541−0.0JCT−ND	Vishay Dale	CR-CW04020000Z0ED	RES SMD 0.0 OHM JUMPER 1/16W	3	

BILL OF MATERIAL MAIN BOARD

Sl No	Reference	Part	PCB Footprint	Vendor	Vendor PN	Manufac-turer	Manufac-turer Part#	Description	Qty	Notes / Re-marks
38	R22,R41, R54,R55, R56,R58, R61,R65, R67,R68, R69,R70, R71,R72, R74,R76, R78,R79, R80,R81, R89,R136, R150	10K	R0402	DigiKey	P10KJCT−ND	Panasonic	ERJ−2GEJ1 03X	RES SMD 10K OHM 5% 1/10W 0402	23	
39	R23,R82	2.2K	R0402	DigiKey	P2.2KJCT−ND	Panasonic	ERJ−2GEJ2 22X	RES SMD 2.2K OHM 5% 1/10W 0402	2	
40	R31,R77	82E	R0603	DigiKey	541−82.0HC-T−ND	Vishay Dale	CR-CW060382R 0FKEA	RES SMD 82 OHM 1% 1/10W 0603	2	
41	R37,R50	50K	R0402	DigiKey	P10KJCT−ND	Panasonic	ERJ−2GEJ1 03X	RES SMD 10K OHM 5% 1/10W 0402	2	
42	R48	12K	R0402	DigiKey	P12.0KLCT−ND	Panasonic	ERJ−2RKF1 202X	RES SMD 12K OHM 1% 1/10W 0402	1	
43	R64,R66, R103,R104,-R122,R123,-R124,R125,-R126, R141,R143, R140,R142	1K	R0402	DigiKey	P1.0KJCT−ND	Panasonic	ERJ−2GEJ1 02X	RES SMD 1K OHM 5% 1/10W 0402	13	
44	R73	1.5K	R0402	DigiKey	P1.5KJCT−ND	Panasonic	ERJ−2GEJ1 52X	RES SMD 1.5K OHM 5% 1/10W 0402	1	
45	R137,R138	22K	R0402	DigiKey	P22KJCT−ND	Panasonic	ERJ−2GEJ2 23X	RES SMD 22K OHM 5% 1/10W 0402	2	
46	R148	8.2K	R0402	DigiKey	P8.2KJCT−ND	Panasonic	ERJ−2GEJ8 22X	RES SMD 8.2K OHM 5% 1/10W 0402	1	
47	R139	47K	R0402	DigiKey	P47KJCT−ND	Panasonic	ERJ−2GEJ4 73X	RES SMD 47K OHM 5% 1/10W 0402	1	
48	R144,R145	33K	R0402	DigiKey	P33KJCT−ND	Panasonic	ERJ−2GEJ3 33X	RES SMD 33K OHM 5% 1/10W 0402	2	
49	R146	3.3K	R0402	DigiKey	P3.3KJCT−ND	Panasonic	ERJ−2GEJ3 32X	RES SMD 3.3K OHM 5% 1/10W 0402	1	
50	SW1,SW2	SDA01H1SB-D		DigiKey	CKN10358−N-D	C&K Components	SDA01H1-SBD	SWITCH DIP TAPE SEALED 1POS 24V	2	
51	TP1,TP2, TP5,TP6, TP7,TP8, TP9,TP20, TP28	Test Pad 50 x 100 mil	NA	NA	NA	NA	NA	NA	9	Test point
52	TP3,TP4, TP11,TP14, TP17,TP18, TP21,TP22, TP23,TP24, TP25,TP26, TP27,TP19	Test Pad 30 x 60 mil	TP_70_36	DigiKey	732−5314−ND	Wurth Electronics Inc	6130011112 1	CONN HEADER 1 POS 2.54	14	
53	U1,U3	ADG3257BR-QZ	QSOP_16-P_25MIL	DigiKey	ADG3257BRQ-Z−ND	Analog Devices	ADG3257BR-QZ	IC MUX QUAD 3.3/5V HS 16−QSOP	2	
54	U2	NB3H63143-G	QFN_16P_0P5MM						1	ON Semi-con-ductor part
55	U4	FT2232H	qfn_64_0p5	DigiKey	768−1025−1−ND	FTDI	FT2232HQ−REEL	IC USB HS DUAL UART/FIFO 64−QFN	1	
56	U5	CAT93C56YI−GT3	tssop_8_4p4w_0p65	Digi−Key	CAT93C56YI−GT3−ND	ON Semi	CAT93C56YI−GT3	IC EEPROM 2KBIT 2MHZ 8TSSOP	1	
57	U6,U9	NCP4688DS-N33T1G, 3.3 V	sot23−5	ON Semi	NCP4688DSN 33T1GOSCT−ND	ON Semi	NCP4688DS-N33T1G	IC REG LDO 3.3V 0.15A SOT23−5	2	
58	U7	NCP4688DS-N18T1G, 1.8 V	sot23−5	ON Semi	NCP4688DSN 18T1GOSCT−ND	ON Semi	NCP4688DS-N18T1G	IC REG LDO 1.8V 0.15A SOT23−5	1	
59	U8	NCP4688DS-N25T1G, 2.5 V	sot23−5	ON Semi	NCP4688DSN 25T1GOSCT−ND	ON Semi	NCP4688DS-N25T1G	IC REG LDO 2.5V 0.15A SOT23−5	1	

BILL OF MATERIAL MAIN BOARD

Sl No	Reference	Part	PCB Footprint	Vendor	Vendor PN	Manufacturer	Manufacturer Part#	Description	Qty	Notes / Remarks
60	U11,U12, U13,U14	S−2151		DigiKey	563−1088−ND	Copal Electronics	S−2151	SW ROTARY DIP SP4T SIDE KNOB 5V	4	
61	U15,U16	SS−10−15S-P−LE		DigiKey	563−1078−ND	Copal Electronics	SS−10−15S-P−LE	SWITCH ROTARY DIP SP5T TOP 5V	2	
62	U17	NCS2220AM-UT1G	8l_udfn_0P4	DigiKey	NCS2220AMU-T1GOSCT−ND	ON Semi	NCS2220A-MUT1G	IC COMPARATOR DUAL LV 8UDFN	1	
63	VTT1, VD-DO_EXT1, VDD_EXT	T POINT R	TP_70_36	DigiKey	732−5314−ND	Wurth Electronics Inc	61300111121	CONN HEADER 1 POS 2.54	3	
64	Y1	SMT XTRL_25MH-z	CRY_EC-X_6150	ECLIPT-EK	ECX□6150□25.000M	ECLIPTEK			1	Based on Crystal values
65	Y3	12 MHz	CRY−ABM8G	Digi−Key	535−10901−1−ND	Abracon Corp	ABM8G−12.000MHZ−4Y−T3	Crystal 12.0000MHz 30ppm 10pF 120 Ohm −10□C − 60□C Surface Mount 4−SMD, No Lead (DFN, LCC)	1	
66	H1,H2,H3, H4,H5 (Mechanical)	Standoff, 4−40 1/4 x 5/8	Standoff, 4−40 1/4 x 5/8	DigiKey	1808K−ND	Keystone	1808	HEX STANDOFF 4−40 ALUMINUM 5/8”	5	
67	To be used with these connectors−J24,J25, J26,J27, J28,J19 and as spare.	Shunt	Shunt	DigiKey	3M9580−ND	3M	969102−0000−DA	SHUNT JUMPER .1” BLACK GOLD	11	
68	H1,H2,H3, H4,H5 (Mechanical)	Screw, 4−40 x 0.25, PHP	Screw, 4−40 x 0.25, PHP	DigiKey	H342−ND	Building Fasteners	PMS 440 0025 PH	MACHINE SCREW PAN PHILLIPS 4−40	5	
69	VTT1, VD-DO_EXT1, VDD1	T POINT R	TP_70_36	DigiKey	732−5314−ND	Wurth Electronics Inc	61300111121	CONN HEADER 1 POS 2.54	4	
70	To be used with these Switchs−U11,U12, U13,U14, U15,U16	Switch Knob Black		DigiKey	563−1089−ND	Copal Electronics	K1	SWITCH KNOB BLACK	6	

BILL OF MATERIAL DAUGHTER BOARD

Sl No	Reference	Part	PCB Footprint	Vendor	Vendor PN	Manufacturer	Qty
1	C13, C15, C17, C19	4.7 μF	C0603	DigiKey	587−1782−1−ND	Taiyo Yuden	4
2	C23, C25	0E	R0603	DigiKey	541−0.0GCT−ND	Vishay Dale	2
3	C14, C16, C18, C20	10 μF	C0603	DigiKey	587−3383−1−ND	Taiyo Yuden	4
4	VDDO1, VDDO2, VDDO0, VDD, GNDO, GND	Test Pad 30 x 60 mil	TP_70_36	DigiKey	732−5314−ND	Wurth Electronics Inc	6
5	J5, J6, J7, J8	CONN RCPT 4	BERG_1X4_2P54	DigiKey	S1011EC−04−ND	Sullins Connector Solutions	4
6	J12	SMA−J−P−H−ST−EM1−ND	con_sma_edge	DigiKey	SMA−J−P−H−ST−EM1	Samtec Inc	1
7	J9, J10, J11	CONS-MA001−SMD−G−ND	Con_SMA_SMD	DigiKey	CONS-MA001−SMD−G	Linx Technologies Inc	3
8	J26, J27, J28, J29, J30, J31	Header 3−pin	berg_1x3_2p54	DigiKey	3M9448−ND	3M	6
9	L3, L4, L6	FB-MJ2125HS250NT9	L0805	DigiKey	587−1767−1−ND	Taiyo Yuden	3
10	R58, R61, R62, R48, R55, R57	0E	R0402	DigiKey	541−0.0JCT−ND	Panasonic	6
11	SW1, SW2, SW3	SDA01H1SBD	NA	DigiKey	CKN10358−ND	C&K Components	3
12	U2	Socket	SOCK_16L_QF-N	Loranger	03714 171 6217	Loranger	1
13	Y3	SMT XTRL_25MHz	CRY_ECX_6150	ECLIPTEK	ECX−6150−25.000M	ECLIPTEK	1
14	Y3	ED1290−ND	SKT CONTACT	DigiKey	8975−0−15−15−21−27−10−0	Mill−Max	2

onsemi, onsemi, and other names, marks, and brands are registered and/or common law trademarks of Semiconductor Components Industries, LLC dba "**onsemi**" or its affiliates and/or subsidiaries in the United States and/or other countries. **onsemi** owns the rights to a number of patents, trademarks, copyrights, trade secrets, and other intellectual property. A listing of **onsemi**'s product/patent coverage may be accessed at www.onsemi.com/site/pdf/Patent−Marking.pdf. **onsemi** is an Equal Opportunity/Affirmative Action Employer. This literature is subject to all applicable copyright laws and is not for resale in any manner.

The evaluation board/kit (research and development board/kit) (hereinafter the "board") is not a finished product and is not available for sale to consumers. The board is only intended for research, development, demonstration and evaluation purposes and will only be used in laboratory/development areas by persons with an engineering/technical training and familiar with the risks associated with handling electrical/mechanical components, systems and subsystems. This person assumes full responsibility/liability for proper and safe handling. Any other use, resale or redistribution for any other purpose is strictly prohibited.

THE BOARD IS PROVIDED BY ONSEMI TO YOU "AS IS" AND WITHOUT ANY REPRESENTATIONS OR WARRANTIES WHATSOEVER. WITHOUT LIMITING THE FOREGOING, ONSEMI (AND ITS LICENSORS/SUPPLIERS) HEREBY DISCLAIMS ANY AND ALL REPRESENTATIONS AND WARRANTIES IN RELATION TO THE BOARD, ANY MODIFICATIONS, OR THIS AGREEMENT, WHETHER EXPRESS, IMPLIED, STATUTORY OR OTHERWISE, INCLUDING WITHOUT LIMITATION ANY AND ALL REPRESENTATIONS AND WARRANTIES OF MERCHANTABILITY, FITNESS FOR A PARTICULAR PURPOSE, TITLE, NON−INFRINGEMENT, AND THOSE ARISING FROM A COURSE OF DEALING, TRADE USAGE, TRADE CUSTOM OR TRADE PRACTICE.

onsemi reserves the right to make changes without further notice to any board.

You are responsible for determining whether the board will be suitable for your intended use or application or will achieve your intended results. Prior to using or distributing any systems that have been evaluated, designed or tested using the board, you agree to test and validate your design to confirm the functionality for your application. Any technical, applications or design information or advice, quality characterization, reliability data or other services provided by **onsemi** shall not constitute any representation or warranty by **onsemi**, and no additional obligations or liabilities shall arise from **onsemi** having provided such information or services.

onsemi products including the boards are not designed, intended, or authorized for use in life support systems, or any FDA Class 3 medical devices or medical devices with a similar or equivalent classification in a foreign jurisdiction, or any devices intended for implantation in the human body. You agree to indemnify, defend and hold harmless **onsemi**, its directors, officers, employees, representatives, agents, subsidiaries, affiliates, distributors, and assigns, against any and all liabilities, losses, costs, damages, judgments, and expenses, arising out of any claim, demand, investigation, lawsuit, regulatory action or cause of action arising out of or associated with any unauthorized use, even if such claim alleges that **onsemi** was negligent regarding the design or manufacture of any products and/or the board.

This evaluation board/kit does not fall within the scope of the European Union directives regarding electromagnetic compatibility, restricted substances (RoHS), recycling (WEEE), FCC, CE or UL, and may not meet the technical requirements of these or other related directives.

FCC WARNING − This evaluation board/kit is intended for use for engineering development, demonstration, or evaluation purposes only and is not considered by **onsemi** to be a finished end product fit for general consumer use. It may generate, use, or radiate radio frequency energy and has not been tested for compliance with the limits of computing devices pursuant to part 15 of FCC rules, which are designed to provide reasonable protection against radio frequency interference. Operation of this equipment may cause interference with radio communications, in which case the user shall be responsible, at its expense, to take whatever measures may be required to correct this interference.

onsemi does not convey any license under its patent rights nor the rights of others.

LIMITATIONS OF LIABILITY: **onsemi** shall not be liable for any special, consequential, incidental, indirect or punitive damages, including, but not limited to the costs of requalification, delay, loss of profits or goodwill, arising out of or in connection with the board, even if **onsemi** is advised of the possibility of such damages. In no event shall **onsemi**'s aggregate liability from any obligation arising out of or in connection with the board, under any theory of liability, exceed the purchase price paid for the board, if any.

The board is provided to you subject to the license and other terms per **onsemi**'s standard terms and conditions of sale. For more information and documentation, please visit www.onsemi.com.

ADDITIONAL INFORMATION

TECHNICAL PUBLICATIONS:
Technical Library: www.onsemi.com/design/resources/technical−documentation
onsemi Website: www.onsemi.com

ONLINE SUPPORT: www.onsemi.com/support
For additional information, please contact your local Sales Representative at www.onsemi.com/support/sales