WQFN16 3x3, 0.5P
CASE 511DN
ISSUE A

DATE 21 MAR 2017

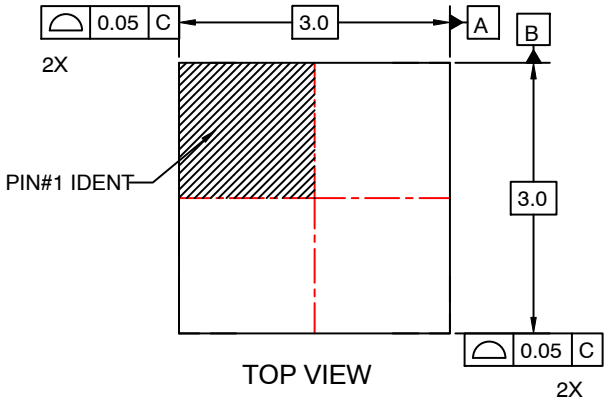

TOP VIEW

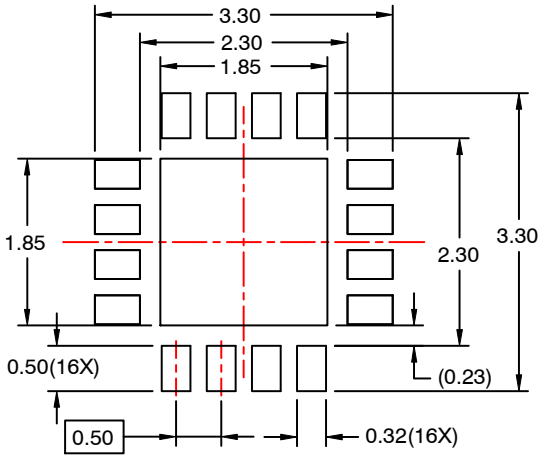

RECOMMENDED LAND PATTERN
PLEASE SEE NOTE "D"

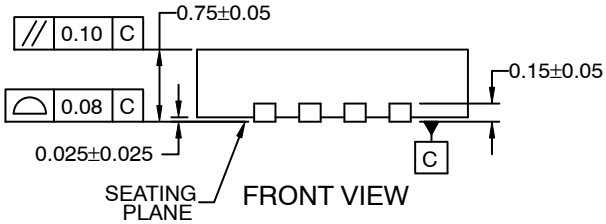

FRONT VIEW

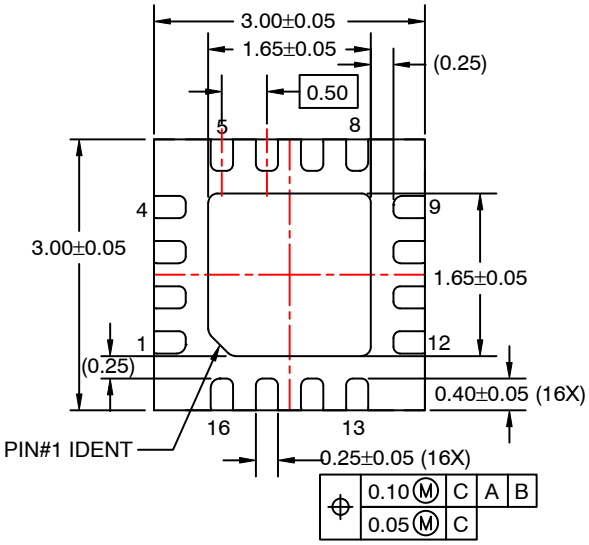

BOTTOM VIEW

NOTES:

A. CONFORMS TO JEDEC REGISTRATION, MO−220. VARIATION WEED−4.

B. DIMENSIONS ARE IN MILLIMETERS.

C. DIMENSIONS AND TOLERANCES PER ASME Y14.5M, 2009.

D. LAND PATTERN RECOMMENDATION IS FOR REFERENCE ONLY, IT MAY NEED TO BE ADJUSTED TO MATCH YOUR SMT PROCESS CAPABILITIES.

DOCUMENT NUMBER:	**98AON13632G**	Electronic versions are uncontrolled except when accessed directly from the Document Repository. Printed versions are uncontrolled except when stamped "CONTROLLED COPY" in red.
DESCRIPTION:	**WQFN16 3X3, 0.5P**	**PAGE 1 OF 1**

ON Semiconductor and ON are trademarks of Semiconductor Components Industries, LLC dba ON Semiconductor or its subsidiaries in the United States and/or other countries. ON Semiconductor reserves the right to make changes without further notice to any products herein. ON Semiconductor makes no warranty, representation or guarantee regarding the suitability of its products for any particular purpose, nor does ON Semiconductor assume any liability arising out of the application or use of any product or circuit, and specifically disclaims any and all liability, including without limitation special, consequential or incidental damages. ON Semiconductor does not convey any license under its patent rights nor the rights of others.

© Semiconductor Components Industries, LLC, 2019