EEPROM Serial 128/256 kb SPI Automotive Grade 0

NV25128, NV25256

SOIC−8
DW SUFFIX
CASE 751BD

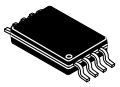

TSSOP−8
DT SUFFIX
CASE 948AL

Description

NV25128, NV25256 are EEPROM Serial 128/256 kb SPI Automotive Grade 0 devices internally organized as 16K/32Kx8 bits. It features a 64−byte page write buffer and supports the Serial Peripheral Interface (SPI) protocol. The device is enabled through a Chip Select ($\overline{CS}$) input. In addition, the required bus signals are clock input (SCK), data input (SI) and data output (SO) lines. The $\overline{HOLD}$ input may be used to pause any serial communication with the NV25xxx device. The device features software and hardware write protection, including partial as well as full array protection. Byte Level On−Chip ECC (Error Correction Code) makes the device suitable for high reliability applications. The device offers an additional Identification Page which can be permanently write protected.

Features

- Automotive AEC−Q100 Grade 0 (−40°C to +150°C) Qualified
- 2.5 V to 5.5 V Supply Voltage Range
- 10 MHz SPI Compatible
- SPI Modes (0,0) & (1,1)
- 64−byte Page Write Buffer
- Self−timed Write Cycle
- Hardware and Software Protection
- Additional Identification Page with Permanent Write Protection
- NV Prefix for Automotive and Other Applications Requiring Site and Change Control
- Block Write Protection
  - Protect $^1/_4$, $^1/_2$ or Entire EEPROM Array
- Low Power CMOS Technology
- Program/Erase Cycles:
  - 4,000,000 at 25°C
  - 1,200,000 at +85°C
  - 600,000 at +125°C
  - 300,000 at +150°C
- 200 Year Data Retention
- SOIC, TSSOP 8−lead Packages
- This Device is Pb−Free, Halogen Free/BFR Free, and RoHS Compliant

PIN CONFIGURATION

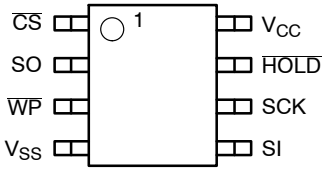

SOIC (DW), TSSOP (DT)

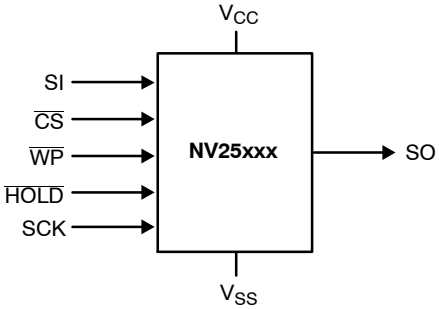

Figure 1. Functional Symbol

PIN FUNCTION

Pin Name	Function
$\overline{CS}$	Chip Select
SO	Serial Data Output
$\overline{WP}$	Write Protect
V_{SS}	Ground
SI	Serial Data Input
SCK	Serial Clock
$\overline{HOLD}$	Hold Transmission Input
V_{CC}	Power Supply

ORDERING INFORMATION

See detailed ordering and shipping information on page 10 of this data sheet.

© Semiconductor Components Industries, LLC, 2018

Table 1. ABSOLUTE MAXIMUM RATINGS

Parameters	Ratings	Units
Operating Temperature	−45 to +150	°C
Storage Temperature	−65 to +150	°C
Voltage on any Pin with Respect to Ground (Note 1)	−0.5 to +6.5	V

Stresses exceeding those listed in the Maximum Ratings table may damage the device. If any of these limits are exceeded, device functionality should not be assumed, damage may occur and reliability may be affected.

1. The DC input voltage on any pin should not be lower than −0.5 V or higher than V_{CC} + 0.5 V. During transitions, the voltage on any pin may undershoot to no less than −1.5 V or overshoot to no more than V_{CC} + 1.5 V, for periods of less than 20 ns.

Table 2. RELIABILITY CHARACTERISTICS (Note 2)

Symbol	Parameter	Test Condition	Max	Units
NEND	Endurance	$T_A \leq 25°C$	4,000,000	Write Cycles (Note 3)
		$T_A = 85°C$	1,200,000	
		$T_A = 125°C$	600,000	
		$T_A = 150°C$	300,000	
TDR	Data Retention	$T_A = 25°C$	200	Year

2. Determined through qualification/characterization.
3. A Write Cycle refers to writing a Byte, a Page, the Status Register or the Identification Page.

Table 3. DC OPERATING CHARACTERISTICS
(V_{CC} = 2.5 V to 5.5 V, T_A = −40°C to +150°C, unless otherwise specified.)

Symbol	Parameter	Test Conditions		Min	Max	Units
I_{CCR}	Supply Current (Read Mode)	Read, SO open	f_{SCK} = 10 MHz		3	mA
I_{CCW}	Supply Current (Write Mode)	Write, CS = V_{CC}			2	mA
I_{SB1}	Standby Current	V_{IN} = GND or V_{CC}, CS = V_{CC}, WP = V_{CC}, HOLD = V_{CC}, V_{CC} = 5.5 V	T_A = −40°C to +125°C		3	μA
			T_A = −40°C to +150°C		7	μA
I_{SB2}	Standby Current	V_{IN} = GND or V_{CC}, CS = V_{CC}, WP = GND, HOLD = GND, V_{CC} = 5.5 V	T_A = −40°C to +125°C		5	μA
			T_A = −40°C to +150°C		10	μA
I_L	Input Leakage Current	V_{IN} = GND or V_{CC}		−2	2	μA
I_{LO}	Output Leakage Current	CS = V_{CC}, V_{OUT} = GND or V_{CC}		−2	2	μA
V_{IL1}	Input Low Voltage			−0.5	0.3 V_{CC}	V
V_{IH1}	Input High Voltage			0.7 V_{CC}	V_{CC} + 0.5	V
V_{OL1}	Output Low Voltage	I_{OL} = 3.0 mA			0.4	V
V_{OH1}	Output High Voltage	I_{OH} = −1.6 mA		V_{CC} −0.8 V		V
V_{PORth}	Internal Power−On Reset Threshold			0.6	1.5	V

Product parametric performance is indicated in the Electrical Characteristics for the listed test conditions, unless otherwise noted. Product performance may not be indicated by the Electrical Characteristics if operated under different conditions.

Table 4. PIN CAPACITANCE (T_A = 25°C, f = 1.0 MHz, V_{CC} = +5.0 V) (Note 2)

Symbol	Test	Conditions	Min	Typ	Max	Unit
C_{OUT}	Output Capacitance (SO)	V_{OUT} = 0 V			8	pF
C_{IN}	Input Capacitance ($\overline{CS}$, SCK, SI, $\overline{WP}$, $\overline{HOLD}$)	V_{IN} = 0 V			8	pF

Table 5. AC CHARACTERISTICS (Note 4)

Symbol	Parameter	$V_{CC} \geq 2.5$ V −40°C to +150°C		Unit
		Min	Max	
f_{SCK}	Clock Frequency	DC	10	MHz
t_{SU}	Data Setup Time	10		ns
t_H	Data Hold Time	10		ns
t_{WH}	SCK High Time	40		ns
t_{WL}	SCK Low Time	40		ns
t_{LZ}	HOLD to Output Low Z		25	ns
t_{RI} (Note 5)	Input Rise Time		2	μs
t_{FI} (Note 5)	Input Fall Time		2	μs
t_{HD}	HOLD Setup Time	0		ns
t_{CD}	HOLD Hold Time	10		ns
t_V	Output Valid from Clock Low		40	ns
t_{HO}	Output Hold Time	0		ns
t_{DIS}	Output Disable Time		20	ns
t_{HZ}	HOLD to Output High Z		25	ns
t_{CS}	CS High Time	40		ns
t_{CSS}	CS Setup Time	30		ns
t_{CSH}	CS Hold Time	30		ns
t_{CNS}	CS Inactive Setup Time	30		
t_{CNH}	CS Inactive Hold Time	30		
t_{WC} (Note 6)	Write Cycle Time		4	ms

4. AC Test Conditions:
   Input Pulse Voltages: 0.3 V_{CC} to 0.7 V_{CC} at V_{CC} > 2.5 V, 0.2 V_{CC} to 0.8 V_{CC} at V_{CC} < 2.5 V
   Input rise and fall times: ≤ 10 ns
   Input and output reference voltages: 0.5 V_{CC}
   Output load: current source $I_{OL\ max}/I_{OH\ max}$; C_L = 30 pF
5. This parameter is tested initially and after a design or process change that affects the parameter.
6. t_{WC} is the time from the rising edge of $\overline{CS}$ after a valid write sequence to the end of the internal write cycle.

Table 6. POWER−UP TIMING (Notes 5, 7)

Symbol	Parameter	Max	Unit
t_{PUR}	Power−up to Read Operation	0.35	ms
t_{PUW}	Power−up to Write Operation	0.35	ms

7. t_{PUR} and t_{PUW} are the delays required from the time V_{CC} is stable until the specified operation can be initiated.

Pin Description

SI: The serial data input pin accepts op−codes, addresses and data. In SPI modes (0,0) and (1,1) input data is latched on the rising edge of the SCK clock input.

SO: The serial data output pin is used to transfer data out of the device. In SPI modes (0,0) and (1,1) data is shifted out on the falling edge of the SCK clock.

SCK: The serial clock input pin accepts the clock provided by the host and used for synchronizing communication between host and NV25xxx.

$\overline{CS}$: The chip select input pin is used to enable/disable the NV25xxx. When $\overline{CS}$ is high, the SO output is tri−stated (high impedance) and the device is in Standby Mode (unless an internal write operation is in progress). *Every communication session between host and NV25xxx must be preceded by a high to low transition and concluded with a low to high transition of the $\overline{CS}$ input.*

$\overline{WP}$: The write protect input pin will allow all write operations to the device when held high. When $\overline{WP}$ pin is tied low and the WPEN bit in the Status Register (refer to Status Register description, later in this Data Sheet) is set to "1", writing to the Status Register is disabled.

$\overline{HOLD}$: The $\overline{HOLD}$ input pin is used to pause transmission between host and NV25xxx, without having to retransmit the entire sequence at a later time. To pause, $\overline{HOLD}$ must be taken low and to resume it must be taken back high, with the SCK input low during both transitions. When not used for pausing, the $\overline{HOLD}$ input should be tied to V_{CC}, either directly or through a resistor.

Functional Description

The NV25xxx device supports the Serial Peripheral Interface (SPI) bus protocol, modes (0,0) and (1,1). The device contains an 8−bit instruction register. The instruction set and associated op−codes are listed in Table 7.

Reading data stored in the NV25xxx is accomplished by simply providing the READ command and an address. Writing to the NV25xxx, in addition to a WRITE command, address and data, also requires enabling the device for writing by first setting certain bits in a Status Register, as will be explained later.

After a high to low transition on the $\overline{CS}$ input pin, the NV25xxx will accept any one of the six instruction op−codes listed in Table 7 and will ignore all other possible 8−bit combinations. The communication protocol follows the timing from Figure 2.

The NV25xxx features an additional Identification Page (64 bytes) which can be accessed for Read and Write operations when the IPL bit from the Status Register is set to "1". The user can also choose to make the Identification Page permanent write protected.

Table 7. INSTRUCTION SET

Instruction	Op−code	Operation
WREN	0000 0110	Enable Write Operations
WRDI	0000 0100	Disable Write Operations
RDSR	0000 0101	Read Status Register
WRSR	0000 0001	Write Status Register
READ	0000 0011	Read Data from Memory
WRITE	0000 0010	Write Data to Memory

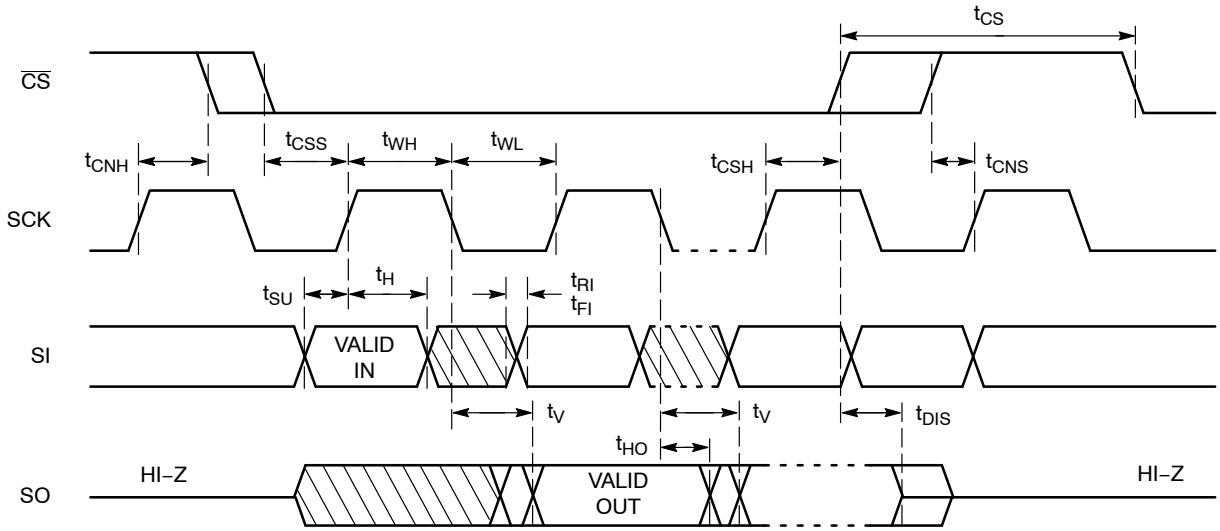

Figure 2. Synchronous Data Timing

Status Register

The Status Register, as shown in Table 8, contains a number of status and control bits.

The $\overline{\text{RDY}}$ (Ready) bit indicates whether the device is busy with a write operation. This bit is automatically set to 1 during an internal write cycle, and reset to 0 when the device is ready to accept commands. For the host, this bit is read only.

The WEL (Write Enable Latch) bit is set/reset by the WREN/WRDI commands. When set to 1, the device is in a Write Enable state and when set to 0, the device is in a Write Disable state.

The BP0 and BP1 (Block Protect) bits determine which blocks are currently write protected. They are set by the user with the WRSR command and are non−volatile. The user is allowed to protect a quarter, one half or the entire memory, by setting these bits according to Table 9. The protected blocks then become read−only.

The WPEN (Write Protect Enable) bit acts as an enable for the $\overline{\text{WP}}$ pin. Hardware write protection is enabled when the $\overline{\text{WP}}$ pin is low and the WPEN bit is 1. This condition prevents writing to the status register and to the block protected sections of memory. While hardware write protection is active, only the non−block protected memory can be written. Hardware write protection is disabled when the $\overline{\text{WP}}$ pin is high or the WPEN bit is 0. The WPEN bit, $\overline{\text{WP}}$ pin and WEL bit combine to either permit or inhibit Write operations, as detailed in Table 10.

The IPL (Identification Page Latch) bit determines whether the additional Identification Page (IPL = 1) or main memory array (IPL = 0) can be accessed both for Read and Write operations. The IPL bit is set by the user with the WRSR command and is volatile. The IPL bit is automatically reset after read/write operations. The LIP (Lock Identification Page) bit is set by the user with the WRSR command and is non−volatile. When set to 1, the Identification Page is permanently write protected (locked in Read−only mode).

Note: *The IPL and LIP bits cannot be set to 1 using the same WRSR instruction. If the user attempts to set ("1") both the IPL and LIP bit in the same time, these bits cannot be written and therefore they will remain unchanged.*

Table 8. STATUS REGISTER

7	6	5	4	3	2	1	0
WPEN	IPL	0	LIP	BP1	BP0	WEL	$\overline{\text{RDY}}$

Table 9. BLOCK PROTECTION BITS

Status Register Bits		Array Address Protected	Protection
BP1	BP0		
0	0	None	No Protection
0	1	NV25128: 3000−3FFF, NV25256: 6000−7FFF	Quarter Array Protection
1	0	NV25128: 2000−3FFF, NV25256: 2000−7FFF	Half Array Protection
1	1	NV25128: 0000−3FFF, NV25256: 0000−7FFF,	Full Array Protection

Table 10. WRITE PROTECT CONDITIONS

WPEN	$\overline{\text{WP}}$	WEL	Protected Blocks	Unprotected Blocks	Status Register
0	X	0	Protected	Protected	Protected
0	X	1	Protected	Writable	Writable
1	Low	0	Protected	Protected	Protected
1	Low	1	Protected	Writable	Protected
X	High	0	Protected	Protected	Protected
X	High	1	Protected	Writable	Writable

WRITE OPERATIONS

The NV25xxx device powers up into a write disable state. The device contains a Write Enable Latch (WEL) which must be set before attempting to write to the memory array or to the status register. In addition, the address of the memory location(s) to be written must be outside the protected area, as defined by BP0 and BP1 bits from the status register.

Write Enable and Write Disable

The internal Write Enable Latch and the corresponding Status Register WEL bit are set by sending the WREN instruction to the NV25xxx. Care must be taken to take the $\overline{CS}$ input high after the WREN instruction, as otherwise the Write Enable Latch will not be properly set. WREN timing is illustrated in Figure 3. The WREN instruction must be sent prior to any WRITE or WRSR instruction.

The internal write enable latch is reset by sending the WRDI instruction as shown in Figure 4. Disabling write operations by resetting the WEL bit, will protect the device against inadvertent writes.

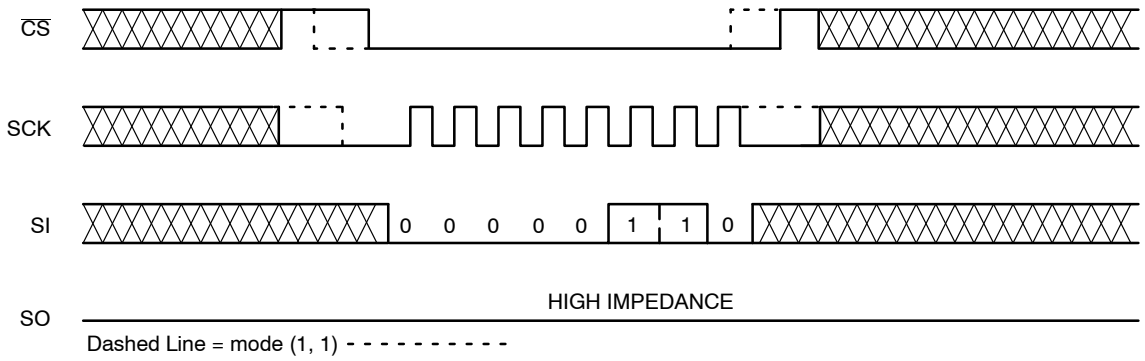

Figure 3. WREN Timing

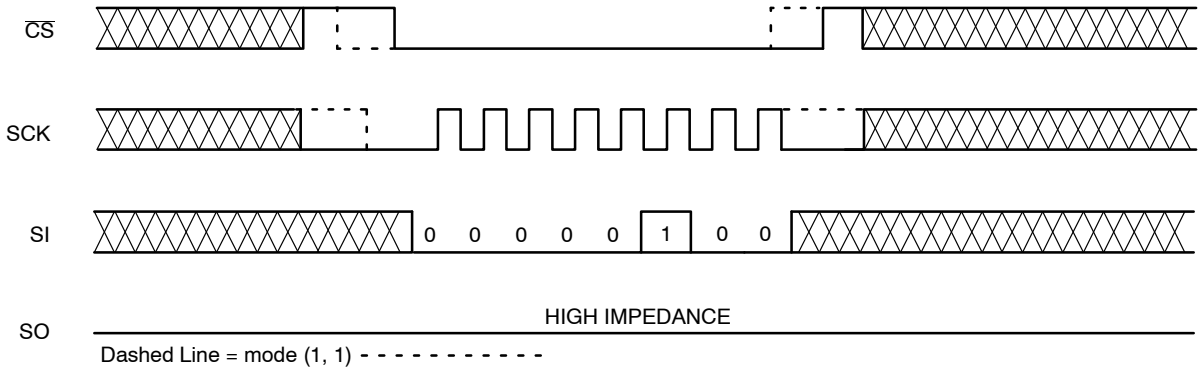

Figure 4. WRDI Timing

Byte Write

Once the WEL bit is set, the user may execute a write sequence, by sending a WRITE instruction, a 16−bit address and data as shown in Figure 5. The number of significant bits is as shown in Table 11. Internal programming will start after the low to high $\overline{CS}$ transition. During an internal write cycle, all commands, except for RDSR (Read Status Register) will be ignored. The $\overline{RDY}$ bit will indicate if the internal write cycle is in progress ($\overline{RDY}$ high), or the device is ready to accept commands ($\overline{RDY}$ low).

Page Write

After sending the first data byte to the NV25xxx, the host may continue sending data, up to a total of 64 bytes, according to timing shown in Figure 6. After each data byte, the lower order address bits are automatically incremented, while the higher order address bits (page address) remain unchanged. If during this process the end of page is exceeded, then loading will “roll over” to the first byte in the page, thus possibly overwriting previously loaded data. Following completion of the write cycle, the NV25xxx is automatically returned to the write disable state.

Write Identification Page

The additional 64−byte Identification Page (IP) can be written with user data using the same Write commands sequence as used for Page Write to the main memory array (Figure 6). **The IPL bit from the Status Register must be set (IPL = 1) using the WRSR instruction, before attempting to write to the IP.** The address bits [A15:A5] are Don’t Care and the [A4:A0] bits define the byte address within the Identification Page. In addition, the Byte Address must point to a location outside the protected area defined by the BP1, BP0 bits from the Status Register. When the full memory array is write protected (BP1, BP0 = 1,1), the write instruction to the IP is not accepted and not executed. Also, the write to the IP is not accepted if the LIP bit from the Status Register is set to 1 (the page is locked in Read−only mode).

Table 11. BYTE ADDRESS

	Address Significant Bits	Address Don’t Care Bits	# Address Clock Pulses
NV25256	A14 – A0	A15	16
NV25128	A13 – A0	A15 – A14	16
Identification Page	A4 – A0	A15 – A5	16

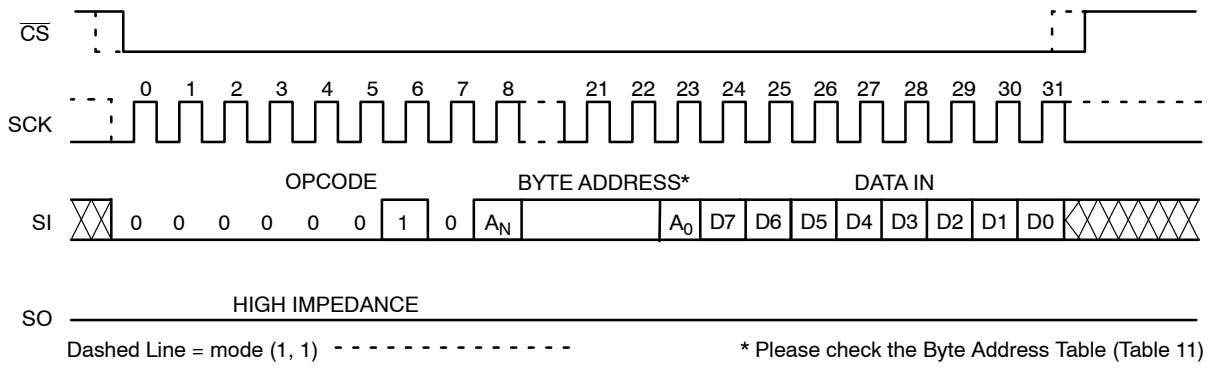

Figure 5. Byte WRITE Timing

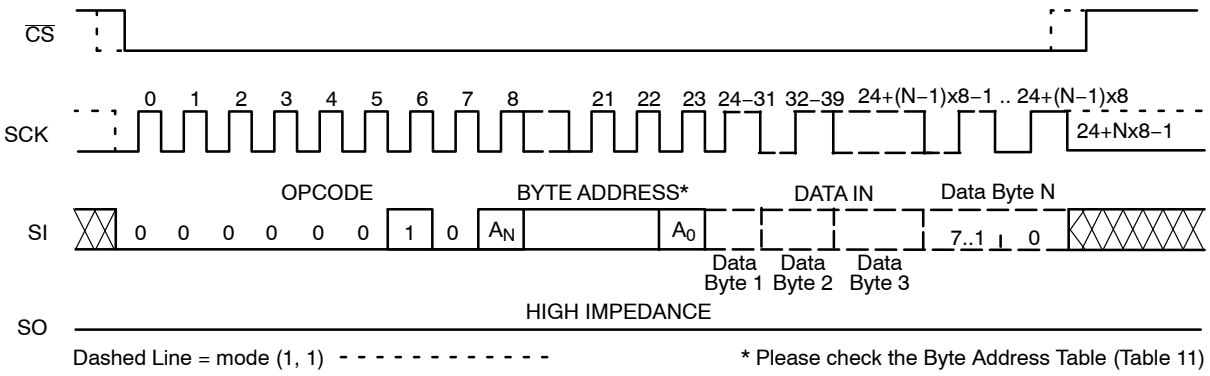

Figure 6. Page WRITE Timing

Write Status Register

The Status Register is written by sending a WRSR instruction according to timing shown in Figure 7. Only bits 2, 3, 4, 6 and 7 can be written using the WRSR command.

Write Protection

The Write Protect ($\overline{WP}$) pin can be used to protect the Block Protect bits BP0 and BP1 against being inadvertently altered. When $\overline{WP}$ is low and the WPEN bit is set to “1”, write operations to the Status Register are inhibited. $\overline{WP}$ going low while $\overline{CS}$ is still low will interrupt a write to the status register. If the internal write cycle has already been initiated, $\overline{WP}$ going low will have no effect on any write operation to the Status Register. The $\overline{WP}$ pin function is blocked when the WPEN bit is set to “0”.

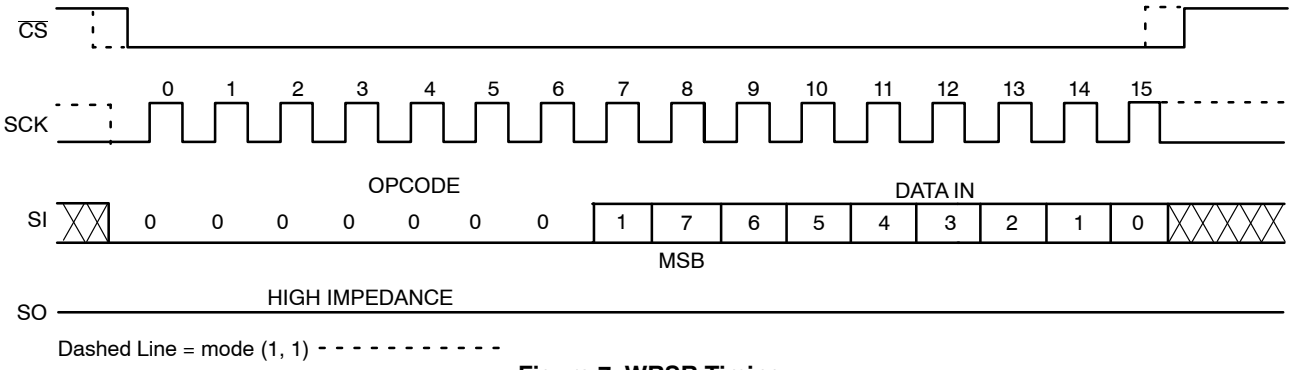

Figure 7. WRSR Timing

READ OPERATIONS

Read from Memory Array

To read from memory, the host sends a READ instruction followed by a 16−bit address (see Table 11 for the number of significant address bits).

After receiving the last address bit, the NV25xxx will respond by shifting out data on the SO pin (as shown in Figure 8). Sequentially stored data can be read out by simply continuing to run the clock. The internal address pointer is automatically incremented to the next higher address as data is shifted out. After reaching the highest memory address, the address counter "rolls over" to the lowest memory address, and the read cycle can be continued indefinitely. The read operation is terminated by taking $\overline{CS}$ high.

Read Status Register

To read the status register, the host simply sends a RDSR command. After receiving the last bit of the command, the NV25xxx will shift out the contents of the status register on the SO pin (Figure 9). The status register may be read at any time, including during an internal write cycle. While the internal write cycle is in progress, the RDSR command will output the full content of the status register. For easy detection of the internal write cycle completion, we recommend sampling the RDY bit only through the polling routine. After detecting the RDY bit "0", the next RDSR instruction will always output the expected content of the status register.

Read Identification Page

Reading the additional 64−byte Identification Page (IP) is achieved using the same Read command sequence as used for Read from main memory array (Figure 8). **The IPL bit from the Status Register must be set (IPL = 1) before attempting to read from the IP.** The [A4:A0] are the address significant bits that point to the data byte shifted out on the SO pin. If the CS continues to be held low, the internal address register defined by [A4:A0] bits is automatically incremented and the next data byte from the IP is shifted out. The byte address must not exceed the 64−byte page boundary.

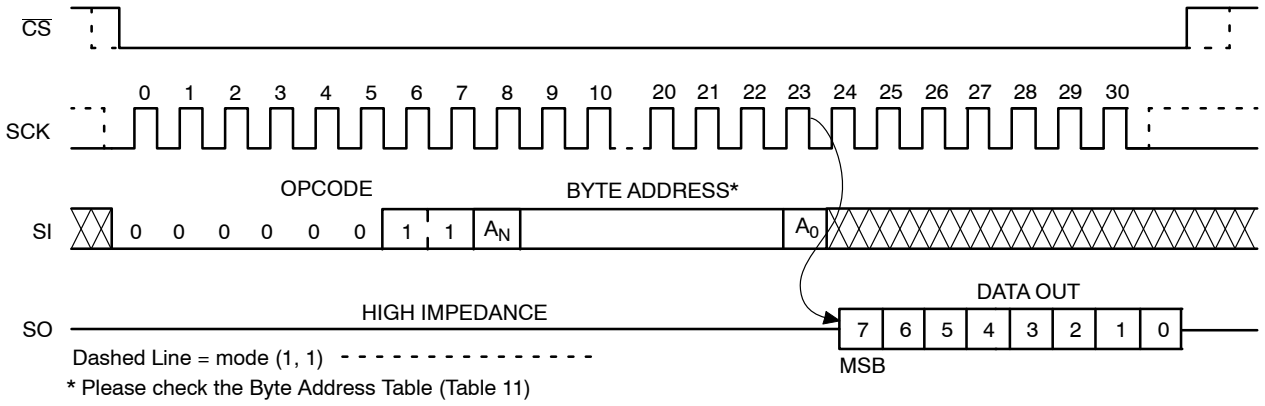

Figure 8. READ Timing

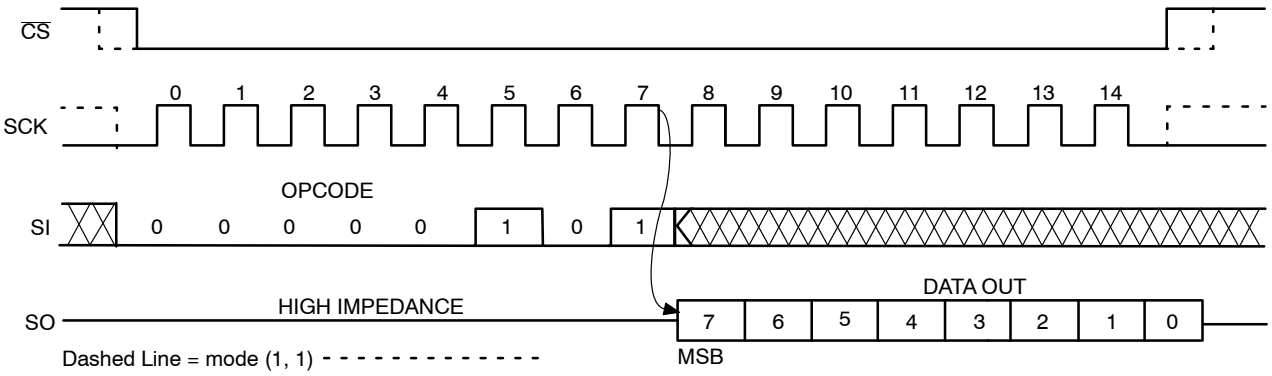

Figure 9. RDSR Timing

Hold Operation

The $\overline{HOLD}$ input can be used to pause communication between host and NV25xxx. To pause, $\overline{HOLD}$ must be taken low while SCK is low (Figure 10). During the hold condition the device must remain selected ($\overline{CS}$ low). During the pause, the data output pin (SO) is tri−stated (high impedance) and SI transitions are ignored. To resume communication, $\overline{HOLD}$ must be taken high while SCK is low.

Design Considerations

The NV25xxx device incorporates Power−On Reset (POR) circuitry which protects the internal logic against powering up in the wrong state. The device will power up into Standby mode after V_{CC} exceeds the POR trigger level and will power down into Reset mode when V_{CC} drops below the POR trigger level. This bi−directional POR behavior protects the device against 'brown−out' failure following a temporary loss of power.

The NV25xxx device powers up in a write disable state and in a low power standby mode. A WREN instruction must be issued prior to any writes to the device.

After power up, the $\overline{CS}$ pin must be brought low to enter a ready state and receive an instruction. After a successful byte/page write or status register write, the device goes into a write disable mode. The $\overline{CS}$ input must be set high after the proper number of clock cycles to start the internal write cycle. Access to the memory array during an internal write cycle is ignored and programming is continued. Any invalid op−code will be ignored and the serial output pin (SO) will remain in the high impedance state.

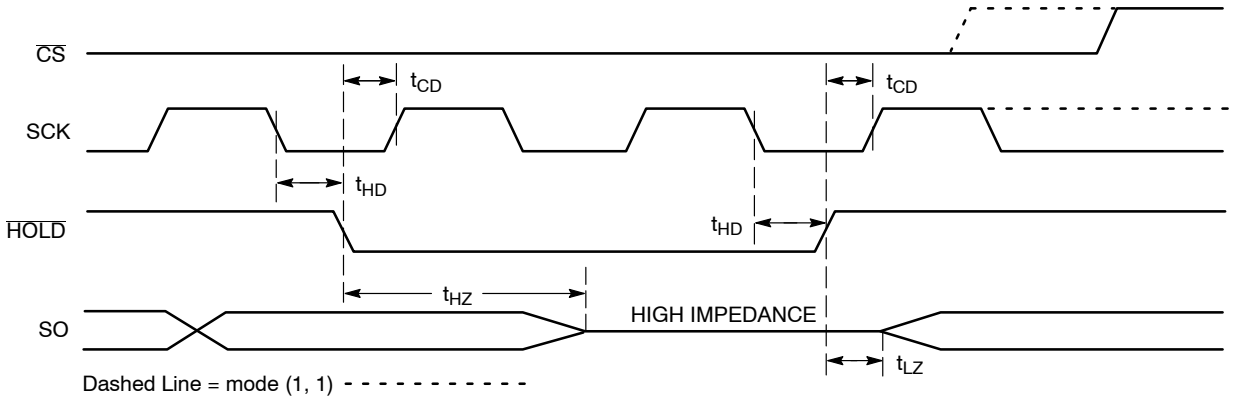

Figure 10. $\overline{HOLD}$ Timing

Error Correction Code

The NV25xxx incorporates on−board Error Correction Code (ECC) circuitry, which makes it possible to detect and correct one faulty bit in a byte. ECC improves data reliability by correcting random single bit failures that might occur over the life of the device.

Table 12. ORDERING INFORMATION (Notes 8, 9)

OPN	Density	Automotive Grade	Package Type	Shipping†
NV25128DTHFT3G	128 kb	Grade 0 (−40°C to +150°C)	TSSOP−8 (Pb−Free)	3,000 / Tape & Reel
NV25128DWHFT3G	128 kb	Grade 0 (−40°C to +150°C)	SOIC−8 (Pb−Free)	3,000 / Tape & Reel
NV25256DTHFT3G	256 kb	Grade 0 (−40°C to +150°C)	TSSOP−8 (Pb−Free)	3,000 / Tape & Reel
NV25256DWHFT3G	256 kb	Grade 0 (−40°C to +150°C)	SOIC−8 (Pb−Free)	3,000 / Tape & Reel

†For information on tape and reel specifications, including part orientation and tape sizes, please refer to our Tape and Reel Packaging Specifications Brochure, BRD8011/D.

8. All packages are RoHS−compliant (Pb−Free, Halogen−free).
9. The standard lead finish is NiPdAu.

SOIC−8, 150 mils
CASE 751BD
ISSUE O

DATE 19 DEC 2008

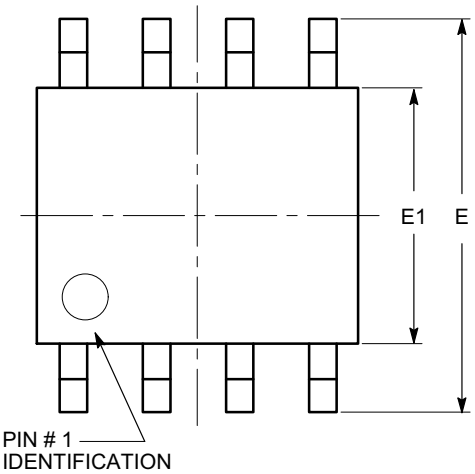

TOP VIEW

SYMBOL	MIN	NOM	MAX
A	1.35		1.75
A1	0.10		0.25
b	0.33		0.51
c	0.19		0.25
D	4.80		5.00
E	5.80		6.20
E1	3.80		4.00
e	1.27 BSC		
h	0.25		0.50
L	0.40		1.27
θ	0º		8º

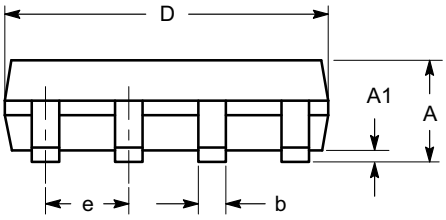

SIDE VIEW

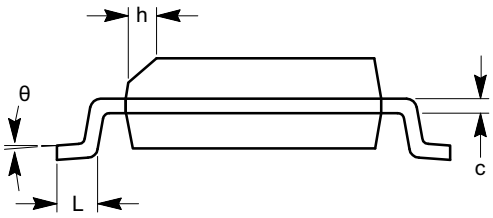

END VIEW

Notes:
(1) All dimensions are in millimeters. Angles in degrees.
(2) Complies with JEDEC MS-012.

DOCUMENT NUMBER:	98AON34272E	Electronic versions are uncontrolled except when accessed directly from the Document Repository. Printed versions are uncontrolled except when stamped "CONTROLLED COPY" in red.
DESCRIPTION:	SOIC−8, 150 MILS	PAGE 1 OF 1

onsemi and onsemi are trademarks of Semiconductor Components Industries, LLC dba **onsemi** or its subsidiaries in the United States and/or other countries. **onsemi** reserves the right to make changes without further notice to any products herein. **onsemi** makes no warranty, representation or guarantee regarding the suitability of its products for any particular purpose, nor does **onsemi** assume any liability arising out of the application or use of any product or circuit, and specifically disclaims any and all liability, including without limitation special, consequential or incidental damages. **onsemi** does not convey any license under its patent rights nor the rights of others.

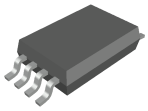

TSSOP8, 4.4x3.0, 0.65P
CASE 948AL
ISSUE A

DATE 20 MAY 2022

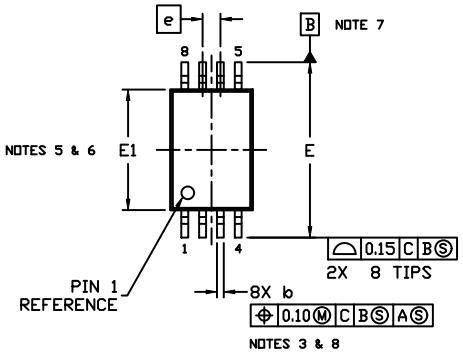

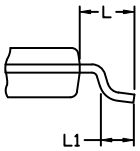

NOTES:

1. DIMENSIONING AND TOLERANCING PER ASME Y14.5, 2009..
2. CONTROLLING DIMENSION: MILLIMETERS
3. DIMENSION b DOES NOT INCLUDE DAMBAR PROTRUSION. ALLOWABLE PROTRUSION SHALL NOT BE 0.15 IN EXCESS OF MAXIMUM MATERIAL CONDITION.
4. DIMENSION D DOES NOT INCLUDE MOLD FLASH, PROTRUSIONS OR GATE BURRS. MOLD FLASH, PROTRUSIONS OR GATE BURRS SHALL NOT EXCEED 0.15 PER SIDE.
5. DIMENSION E1 DOES NOT INCLUDE INTERLEAD FLASH OR PROTRUSION. INTERLEAD FLASH OR PROTRUSION SHALL NOT EXCEED 0.25 PER SIDE.
6. THE PACKAGE TOP MAY BE SMALLER THAN THE PACKAGE BOTTOM. DIMENSIONS D AND E1 ARE DETERMINED AT THE OUTERMOST EXTREMES OF THE PLASTIC BODY AT DATUM PLANE H.
7. DATUMS A AND B ARE TO BE DETERMINED AT DATUM H.
8. DIMENSIONS b AND c APPLY TO THE FLAT SECTION OF THE LEAD BETWEEN 0.10 AND 0.25 FROM THE LEAD TIP..
9. A1 IS DEFINED AS THE LOWEST VERTICAL DISTANCE FROM THE SEATING PLANE TO THE LOWEST POINT ON THE PACKAGE BODY..

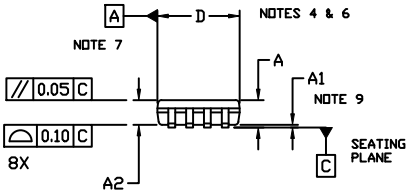

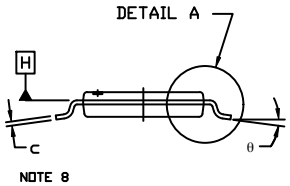

DIM	MILLIMETERS		
	MIN.	NOM.	MAX.
A	---	---	1.20
A1	0.05	---	0.15
A2	0.80	0.90	1.05
b	0.19	---	0.30
c	0.09	---	0.20
D	2.90	3.00	3.10
E	6.30	6.40	6.50
E1	4.30	4.40	4.50
e	0.65 BSC		
L	1.00 REF		
L1	0.50	0.60	0.70
θ	0°	---	8°

GENERIC
MARKING DIAGRAM*

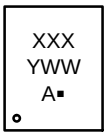

XXX = Specific Device Code
Y = Year
WW = Work Week
A = Assembly Location
▪ = Pb−Free Package

*This information is generic. Please refer to device data sheet for actual part marking. Pb−Free indicator, “G” or microdot “▪”, may or may not be present. Some products may not follow the Generic Marking.

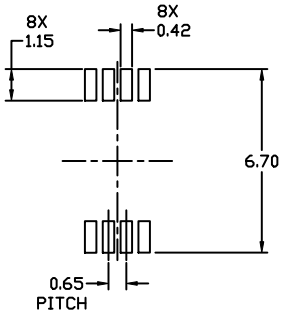

RECOMMENDED
MOUNTING FOOTPRINT*

* For additional information on our Pb-Free strategy and soldering details, please download the ON Semiconductor Soldering and Mounting Techniques Reference Manual, SOLDERRM/D.

DOCUMENT NUMBER:	**98AON34428E**	Electronic versions are uncontrolled except when accessed directly from the Document Repository. Printed versions are uncontrolled except when stamped “CONTROLLED COPY” in red.
DESCRIPTION:	**TSSOP8, 4.4X3.0, 0.65P**	**PAGE 1 OF 1**

onsemi and onsemi are trademarks of Semiconductor Components Industries, LLC dba **onsemi** or its subsidiaries in the United States and/or other countries. **onsemi** reserves the right to make changes without further notice to any products herein. **onsemi** makes no warranty, representation or guarantee regarding the suitability of its products for any particular purpose, nor does **onsemi** assume any liability arising out of the application or use of any product or circuit, and specifically disclaims any and all liability, including without limitation special, consequential or incidental damages. **onsemi** does not convey any license under its patent rights nor the rights of others.

onsemi, onsemi, and other names, marks, and brands are registered and/or common law trademarks of Semiconductor Components Industries, LLC dba "**onsemi**" or its affiliates and/or subsidiaries in the United States and/or other countries. **onsemi** owns the rights to a number of patents, trademarks, copyrights, trade secrets, and other intellectual property. A listing of **onsemi**'s product/patent coverage may be accessed at www.onsemi.com/site/pdf/Patent−Marking.pdf. **onsemi** reserves the right to make changes at any time to any products or information herein, without notice. The information herein is provided "as−is" and **onsemi** makes no warranty, representation or guarantee regarding the accuracy of the information, product features, availability, functionality, or suitability of its products for any particular purpose, nor does **onsemi** assume any liability arising out of the application or use of any product or circuit, and specifically disclaims any and all liability, including without limitation special, consequential or incidental damages. Buyer is responsible for its products and applications using **onsemi** products, including compliance with all laws, regulations and safety requirements or standards, regardless of any support or applications information provided by **onsemi**. "Typical" parameters which may be provided in **onsemi** data sheets and/or specifications can and do vary in different applications and actual performance may vary over time. All operating parameters, including "Typicals" must be validated for each customer application by customer's technical experts. **onsemi** does not convey any license under any of its intellectual property rights nor the rights of others. **onsemi** products are not designed, intended, or authorized for use as a critical component in life support systems or any FDA Class 3 medical devices or medical devices with a same or similar classification in a foreign jurisdiction or any devices intended for implantation in the human body. Should Buyer purchase or use **onsemi** products for any such unintended or unauthorized application, Buyer shall indemnify and hold **onsemi** and its officers, employees, subsidiaries, affiliates, and distributors harmless against all claims, costs, damages, and expenses, and reasonable attorney fees arising out of, directly or indirectly, any claim of personal injury or death associated with such unintended or unauthorized use, even if such claim alleges that **onsemi** was negligent regarding the design or manufacture of the part. **onsemi** is an Equal Opportunity/Affirmative Action Employer. This literature is subject to all applicable copyright laws and is not for resale in any manner.

ADDITIONAL INFORMATION

TECHNICAL PUBLICATIONS:
Technical Library: www.onsemi.com/design/resources/technical−documentation
onsemi Website: www.onsemi.com

ONLINE SUPPORT: www.onsemi.com/support
For additional information, please contact your local Sales Representative at
www.onsemi.com/support/sales