MOSFET – Power, N-Channel, UltraFET

55 V, 15 A, 90 mΩ

FDMC15N06

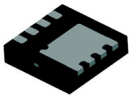

WDFN8 3.3X3.3, 0.65P
CASE 511DQ

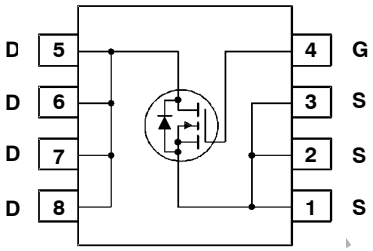

Description

These N−Channel power MOSFETs are manufactured using the innovative UltraFET process. This advanced process technology achieves the lowest possible on−resistance per silicon area, resulting in outstanding performance.

This device is capable of withstanding high energy in the avalanche mode and the diode exhibits very low reverse recovery time and stored charge. It was designed for use in applications where power efficiency is important, such as switching regulators, switching converters, motor drivers, relay drivers, low voltage bus switches, and power management in portable and battery−operated products.

Features

- $R_{DS(on)}$ = 75 mΩ (Typ.) @ V_{GS} = 10 V, I_D = 15 A
- 100% Avalanche Tested
- These Device is Pb−Free and RoHS Compliant

MARKING DIAGRAM

ZXYKK
15N06

Z = Assembly Plant Code
XY = Date Code (Year & Week)
KK = Lot Traceability Code
15N06 = Specific Device Code

ORDERING INFORMATION

Device	Package	Shipping†
FDMC15N06	WDFN8 (Pb−Free)	3000 / Tape & Reel

†For information on tape and reel specifications, including part orientation and tape sizes, please refer to our Tape and Reel Packaging Specifications Brochure, BRD8011/D.

DISCONTINUED
THIS DEVICE IS NOT RECOMMENDED FOR NEW DESIGN
PLEASE CONTACT YOUR onsemi
REPRESENTATIVE FOR INFORMATION

MOSFET MAXIMUM RATINGS T_C = 25°C unless otherwise noted

Symbol	Parameter	Ratings	Unit
V_{DSS}	Drain to Source Voltage	55	V
V_{GSS}	Gate to Source Voltage	±20	V
I_D	Drain Current –Continuous (T_C= 25°C) –Continuous (T_C = 100°C) –Continuous (T_A = 25°C) (Note 1)	 15 9 2.4	A
I_{DM}	Drain Current –Pulsed (Note 2)	60	A
E_{AS}	Single Pulse Avalanche Energy (Note 3)	36	mJ
I_{AR}	Avalanche Energy	15	A
E_{AR}	Repetitive Avalanche Energy	3.5	mJ
P_D	Power Dissipation (T_C= 25°C) (T_A = 25°C)	 35 2.3	W
T_J, T_{STG}	Operating and Storage Temperature Range	–55 to +150	°C
T_L	Maximum Lead Temperature for Soldering, 1/8” from Case for 5 Seconds	300	°C

Stresses exceeding those listed in the Maximum Ratings table may damage the device. If any of these limits are exceeded, device functionality should not be assumed, damage may occur and reliability may be affected.

THERMAL CHARACTERISTICS

Symbol	Parameter	Value	Unit
$R_{\theta JC}$	Thermal Resistance, Junction to Case, Max	3.5	°C/W
$R_{\theta JA}$	Thermal Resistance, Junction to Ambient, Max (Note 1)	53	

ELECTRICAL CHARACTERISTICS Tc = 25 °C unless otherwise noted.

Symbol	Parameter	Test Conditions	Min	Typ	Max	Unit
Off Characteristics						
BV_{DSS}	Drain to Source Breakdown Voltage	I_D = 250 μA, V_{GS} = 0 V, T_C = 25 °C	55	–	–	V
$\frac{\Delta BV_{DSS}}{\Delta T_J}$	Breakdown Voltage Temperature Coefficient	I_D = 250 μA, Referenced to 25°C	–	70	–	V/°C
I_{DSS}	Zero Gate Voltage Drain Current	V_{DS} = 50 V, V_{GS} = 0 V V_{DS} = 45 V, T_C = 150 °C	– –	– –	1 250	μA
I_{GSS}	Gate to Body Leakage Current	V_{GS} = ±20 V, V_{DS} = 0 V	–	–	±100	nA
On Characteristics						
$V_{GS(th)}$	Gate to Source Threshold Voltage	V_{GS} = V_{DS}, I_D = 250 μA	2.0	–	4.0	V
$R_{DS(on)}$	Static Drain to Source On Resistance	V_{GS} = 10 V, I_D = 15 A	–	0.075	0.090	Ω
g_{FS}	Forward Transconductance	V_{DS} = 20 V, I_D = 15 A	–	5	–	S
Dynamic Characteristics						
C_{iss}	Input Capacitance	V_{DS} = 25 V, V_{GS} = 0 V, f = 1 MHz	–	265	350	pF
C_{oss}	Output Capacitance		–	97	130	pF
C_{rss}	Reverse Transfer Capacitance		–	28	42	pF
$Q_{g(tot)}$	Total Gate Charge at 10 V	V_{DS} = 30 V, I_D = 15 A, V_{GS} = 10 V (Note 4)	–	8.8	11.5	nC
Q_{gs}	Gate to Source Gate Charge		–	1.7	–	nC
Q_{gd}	Gate to Drain “Miller” Charge		–	3.6	–	nC

DISCONTINUED
THIS DEVICE IS NOT RECOMMENDED FOR NEW DESIGN
PLEASE CONTACT YOUR onsemi
REPRESENTATIVE FOR INFORMATION

ELECTRICAL CHARACTERISTICS Tc = 25 °C unless otherwise noted.(continued)

Symbol	Parameter	Test Conditions	Min	Typ	Max	Unit
Switching Characteristics						
$t_{d(on)}$	Turn−On Delay Time	V_{DD} = 30 V, I_D = 15 A, V_{GS} = 10 V, R_G = 25 Ω (Note 4)	–	9.5	29	ns
t_r	Turn−On Rise Time		–	36.5	83	ns
$t_{d(off)}$	Turn−Off Delay Time		–	22.5	55	ns
t_f	Turn−Off Fall Time		–	22	54	ns
Drain−Source Diode Characteristics						
I_S	Maximum Continuous Drain to Source Diode Forward Current		–	–	15	A
			–	–	60	A
I_{SM}	Maximum Pulsed Drain to Source Diode Forward Current		–	–	1.25	V
V_{SD}	Drain to Source Diode Forward Voltage	V_{GS} = 0 V, I_{SD} = 15 A				
t_{rr}	Reverse Recovery Time	V_{GS} = 0 V, I_{SD} = 15 A, dI_F/dt = 100 A/μs (Note 5)	–	30	–	ns
Q_{rr}	Reverse Recovery Charge		–	35	–	nC

Product parametric performance is indicated in the Electrical Characteristics for the listed test conditions, unless otherwise noted. Product performance may not be indicated by the Electrical Characteristics if operated under different conditions.

1. $R_{\theta JA}$ is determined with the device mounted on a 1 in^2 oz. copper pad on a 1.5 x 1.5 in. board of FR−4 material $R_{\theta JC}$ is guaranteed by design while $R_{\theta CA}$ is determined by the user's board design.

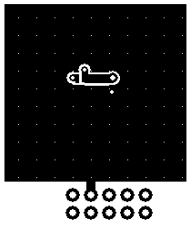

a. 53 °C/W when mounted on a 1 in^2 pad of 2 oz copper

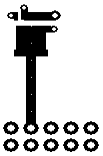

b.125 °C/W when mounted on a minimum pad of 2 oz copper

2. Repetitive rating: pulse−width limited by maximum junction temperature.
3. L = 1 mH, I_{AS} = 8.5 A, R_G = 25 Ω, starting TJ = 25°C.
4. Essentially independent of operating temperature typical characteristics.
5. I_{SD} ≤ 15 A, di/dt ≤ 200 A/μs, V_{DD} ≤ 40 V, starting T_J = 25°C.

DISCONTINUED
THIS DEVICE IS NOT RECOMMENDED FOR NEW DESIGN
PLEASE CONTACT onsemi
REPRESENTATIVE FOR INFORMATION

TYPICAL CHARACTERISTICS

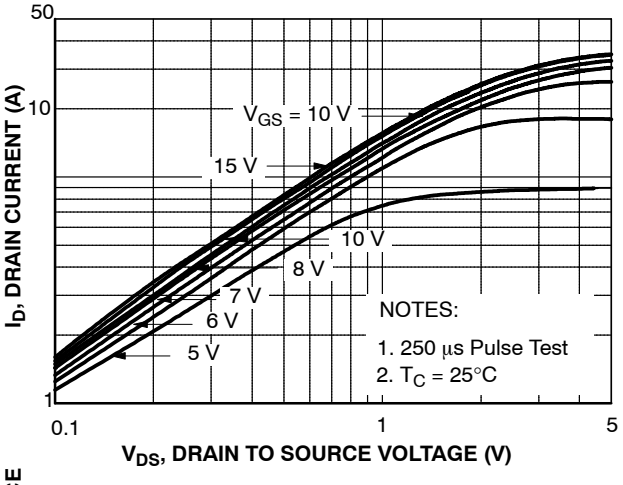

Figure 1. On−Region Characteristics

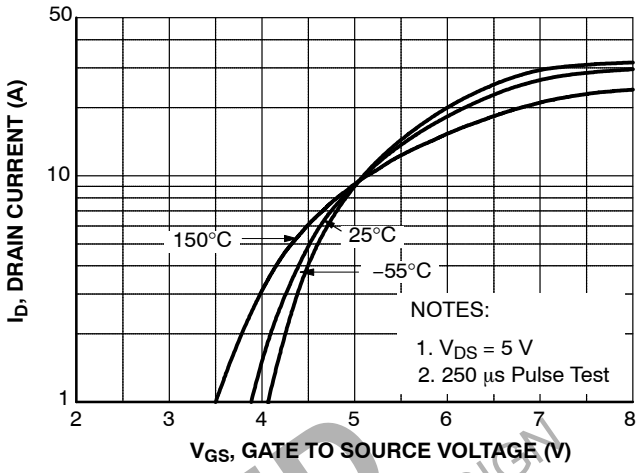

Figure 2. Transfer Characteristics

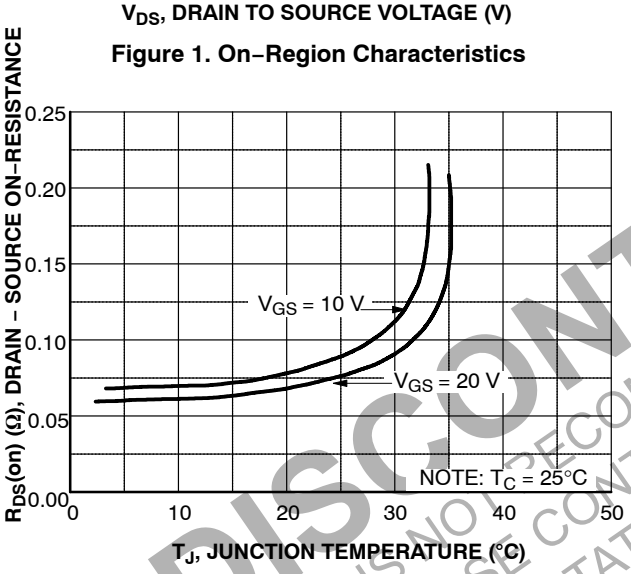

Figure 3. On−Resistance Variation vs. Drain Current and Gate Voltage

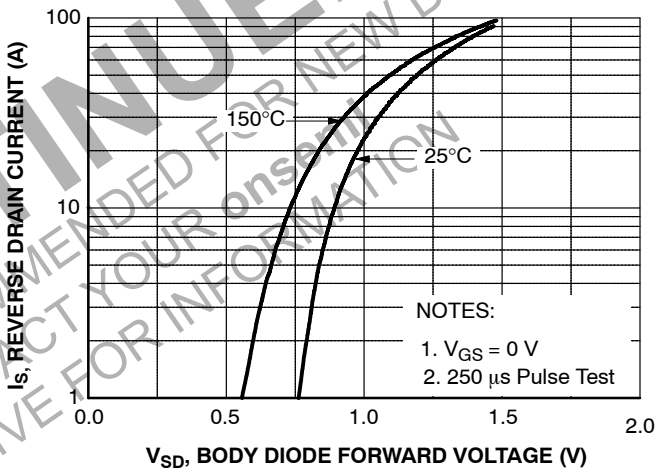

Figure 4. Body Diode Forward Voltage Variation vs. Source Current and Temperature

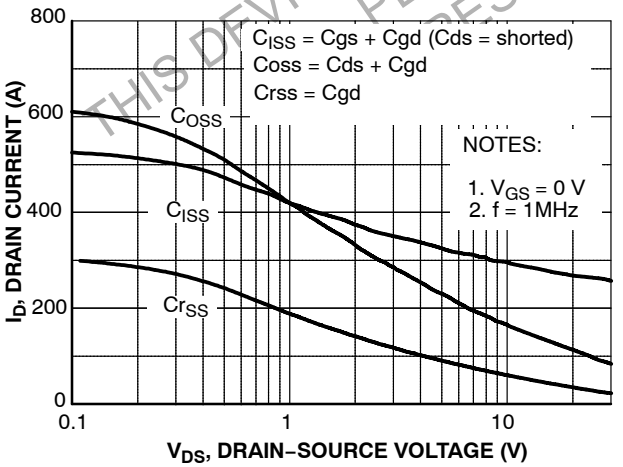

Figure 5. Capacitance Characteristics

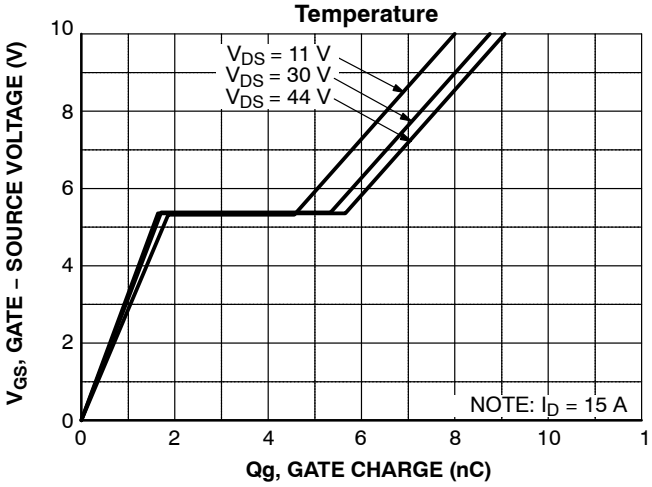

Figure 6. Gate Charge Characteristics

DISCONTINUED
THIS DEVICE IS NOT RECOMMENDED FOR NEW DESIGN
PLEASE CONTACT YOUR onsemi
REPRESENTATIVE FOR INFORMATION

TYPICAL CHARACTERISTICS (CONTINUED)

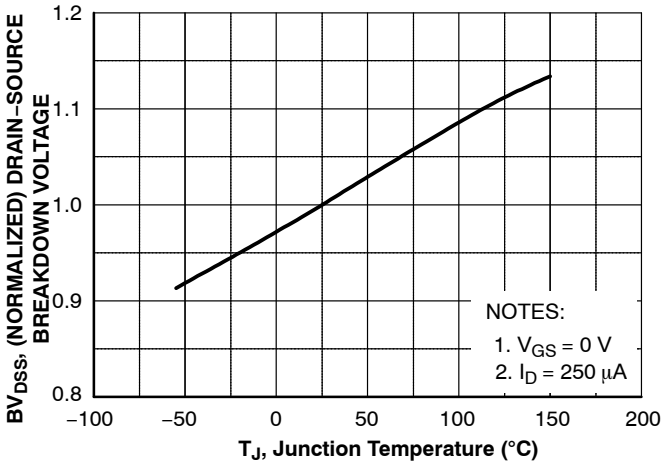

Figure 7. Breakdown Voltage Variation vs. Temperature

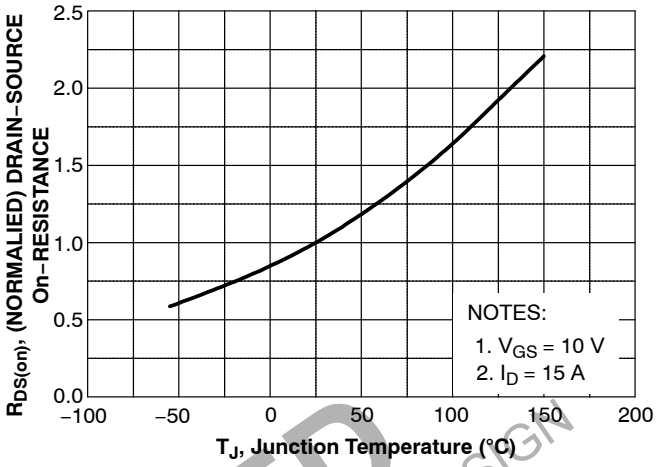

Figure 8. On−Resistance Variation vs. Temperature

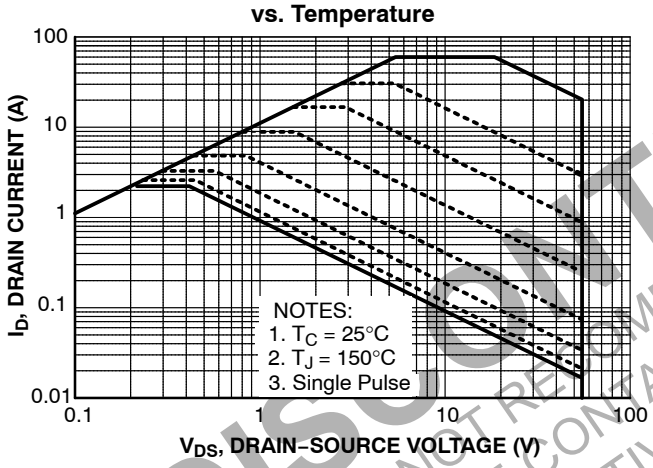

Figure 9. Unclamped Inductive Switching Capability

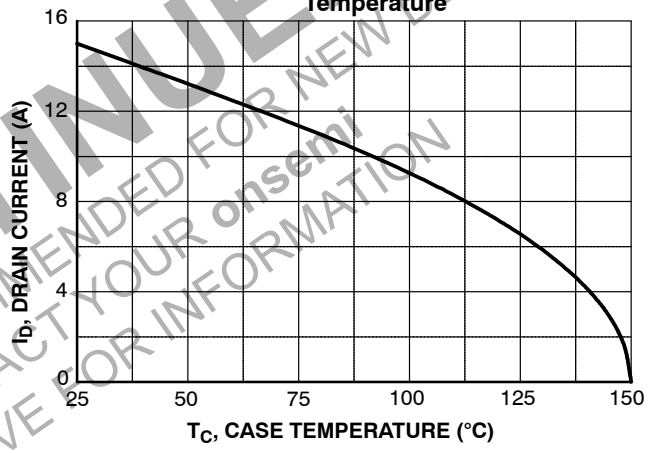

Figure 10. Maximum Drain Current vs. Case Temperature

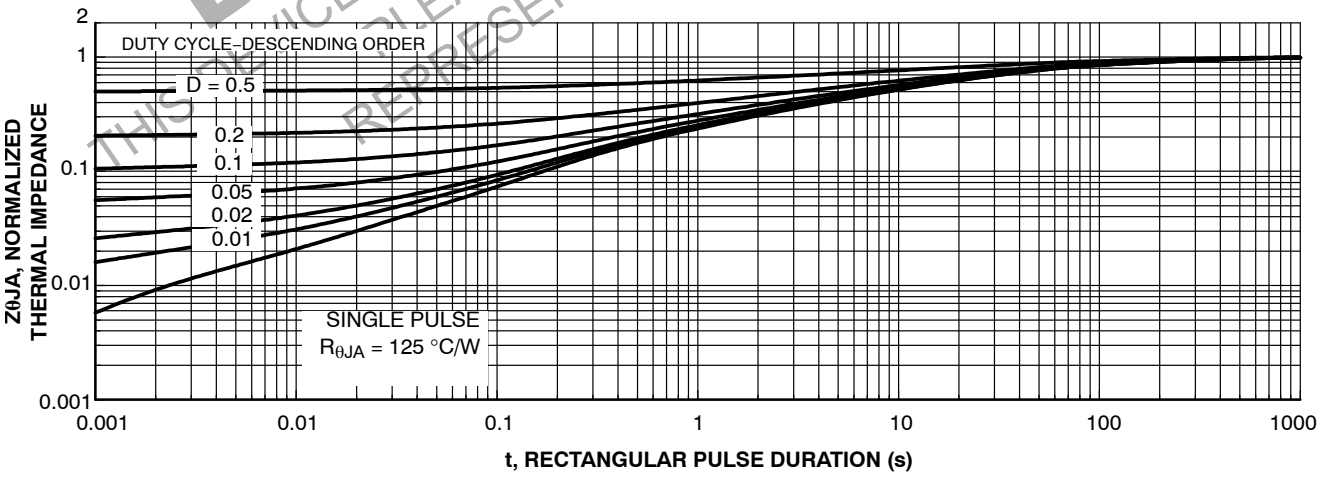

Figure 11. Thermal Response Curve

DISCONTINUED
THIS DEVICE IS NOT RECOMMENDED FOR NEW DESIGN
PLEASE CONTACT YOUR onsemi
REPRESENTATIVE FOR INFORMATION

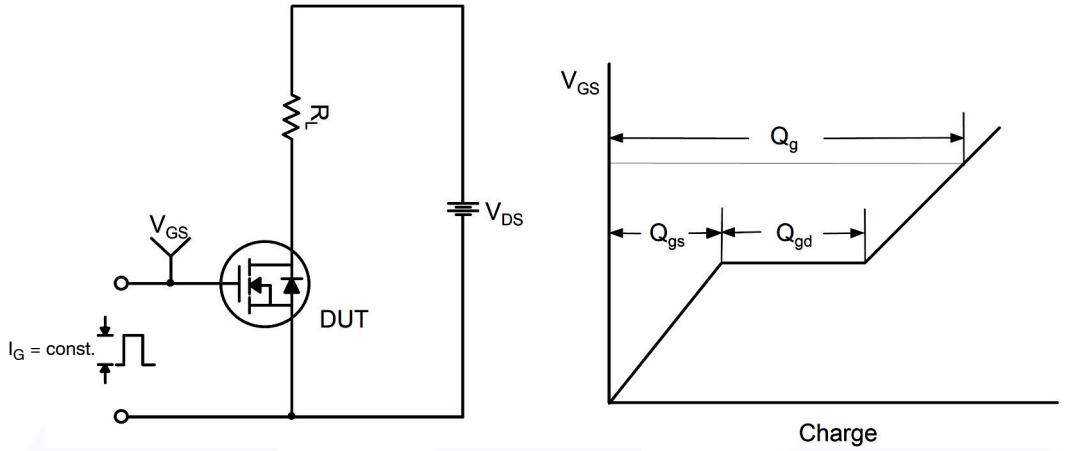

Figure 12. Gate Charge Test Circuit & Waveform

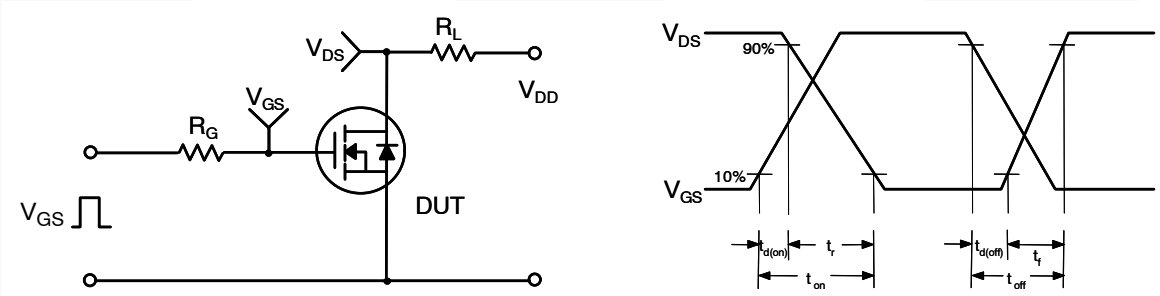

Figure 13. Resistive Switching Test Circuit & Waveforms

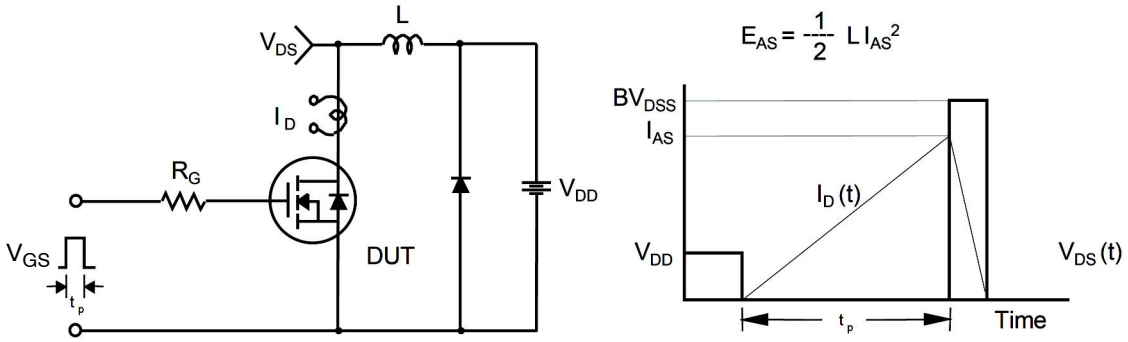

Figure 14. Unclamped Inductive Switching Test Circuit & Waveforms

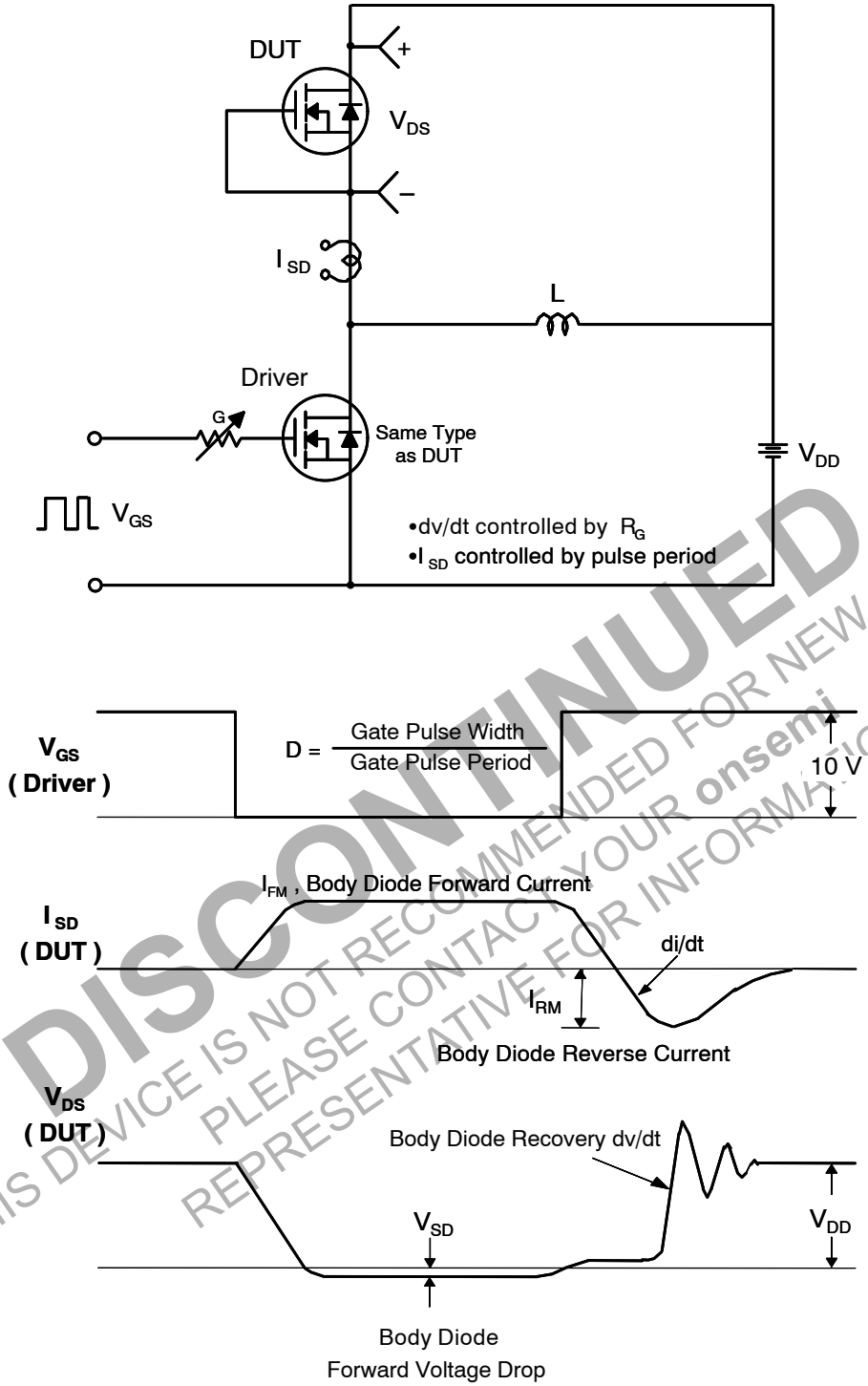

Figure 15. Peak Diode Recovery dv/dt Test Circuit & Waveforms

DISCONTINUED
THIS DEVICE IS NOT RECOMMENDED FOR NEW DESIGN
PLEASE CONTACT YOUR onsemi
REPRESENTATIVE FOR INFORMATION

WDFN8 3.3x3.3, 0.65P
CASE 511DQ
ISSUE O

DATE 31 OCT 2016

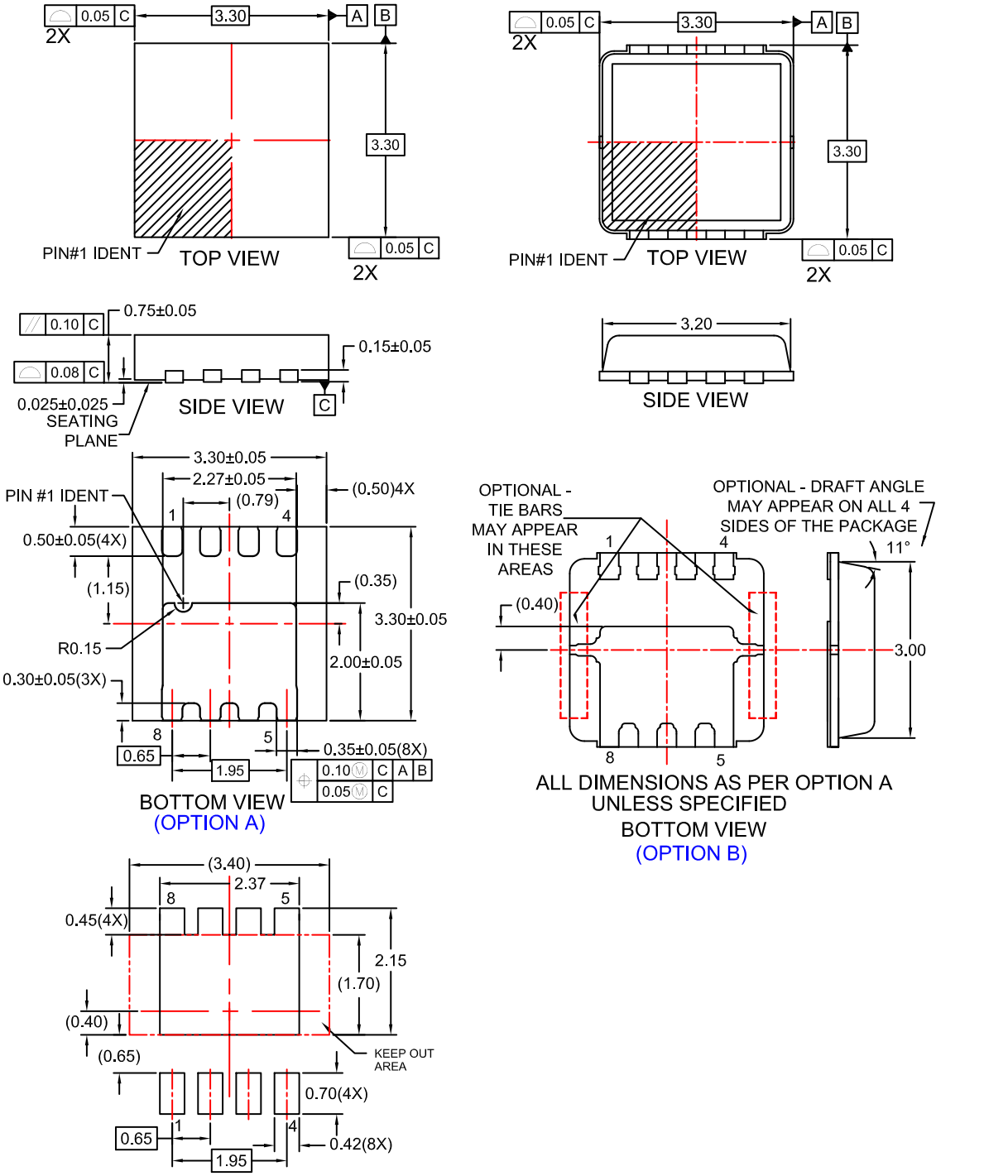

DOCUMENT NUMBER:	**98AON13648G**	Electronic versions are uncontrolled except when accessed directly from the Document Repository. Printed versions are uncontrolled except when stamped "CONTROLLED COPY" in red.
DESCRIPTION:	**WDFN8 3.3X3.3, 0.65P**	**PAGE 1 OF 2**

onsemi and onsemi are trademarks of Semiconductor Components Industries, LLC dba **onsemi** or its subsidiaries in the United States and/or other countries. **onsemi** reserves the right to make changes without further notice to any products herein. **onsemi** makes no warranty, representation or guarantee regarding the suitability of its products for any particular purpose, nor does **onsemi** assume any liability arising out of the application or use of any product or circuit, and specifically disclaims any and all liability, including without limitation special, consequential or incidental damages. **onsemi** does not convey any license under its patent rights nor the rights of others.

WDFN8 3.3x3.3, 0.65P
CASE 511DQ
ISSUE O

DATE 31 OCT 2016

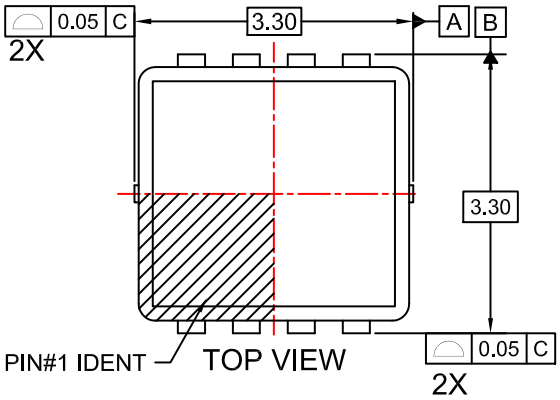

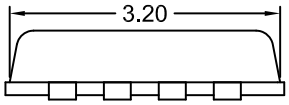

SIDE VIEW

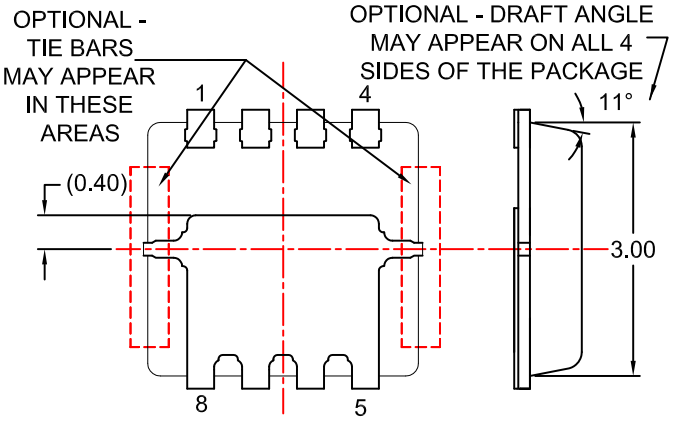

ALL DIMENSIONS AS PER OPTION A
UNLESS SPECIFIED

BOTTOM VIEW
(OPTION C)

NOTES:

A. PACKAGE DOES NOT FULLY CONFORM TO JEDEC REGISTRATION MO-240.
B. DIMENSIONS ARE IN MILLIMETERS.
C. DIMENSIONS AND TOLERANCES PER ASME Y14.5M, 2009.
D. LAND PATTERN RECOMMENDATION IS EXISTING INDUSTRY LAND PATTERN
E. DIMENSIONS DO NOT INCLUDE BURRS OR MOLD FLASH. BURRS OR MOLD FLASH SHALL NOT EXCEED 0.10MM.

DOCUMENT NUMBER:	**98AON13648G**	Electronic versions are uncontrolled except when accessed directly from the Document Repository. Printed versions are uncontrolled except when stamped "CONTROLLED COPY" in red.	
DESCRIPTION:	**WDFN8 3.3X3.3, 0.65P**		**PAGE 2 OF 2**

onsemi and onsemi are trademarks of Semiconductor Components Industries, LLC dba **onsemi** or its subsidiaries in the United States and/or other countries. **onsemi** reserves the right to make changes without further notice to any products herein. **onsemi** makes no warranty, representation or guarantee regarding the suitability of its products for any particular purpose, nor does **onsemi** assume any liability arising out of the application or use of any product or circuit, and specifically disclaims any and all liability, including without limitation special, consequential or incidental damages. **onsemi** does not convey any license under its patent rights nor the rights of others.

onsemi, onsemi, and other names, marks, and brands are registered and/or common law trademarks of Semiconductor Components Industries, LLC dba "**onsemi**" or its affiliates and/or subsidiaries in the United States and/or other countries. **onsemi** owns the rights to a number of patents, trademarks, copyrights, trade secrets, and other intellectual property. A listing of **onsemi**'s product/patent coverage may be accessed at www.onsemi.com/site/pdf/Patent−Marking.pdf. **onsemi** reserves the right to make changes at any time to any products or information herein, without notice. The information herein is provided "as−is" and **onsemi** makes no warranty, representation or guarantee regarding the accuracy of the information, product features, availability, functionality, or suitability of its products for any particular purpose, nor does **onsemi** assume any liability arising out of the application or use of any product or circuit, and specifically disclaims any and all liability, including without limitation special, consequential or incidental damages. Buyer is responsible for its products and applications using **onsemi** products, including compliance with all laws, regulations and safety requirements or standards, regardless of any support or applications information provided by **onsemi**. "Typical" parameters which may be provided in **onsemi** data sheets and/or specifications can and do vary in different applications and actual performance may vary over time. All operating parameters, including "Typicals" must be validated for each customer application by customer's technical experts. **onsemi** does not convey any license under any of its intellectual property rights nor the rights of others. **onsemi** products are not designed, intended, or authorized for use as a critical component in life support systems or any FDA Class 3 medical devices or medical devices with a same or similar classification in a foreign jurisdiction or any devices intended for implantation in the human body. Should Buyer purchase or use **onsemi** products for any such unintended or unauthorized application, Buyer shall indemnify and hold **onsemi** and its officers, employees, subsidiaries, affiliates, and distributors harmless against all claims, costs, damages, and expenses, and reasonable attorney fees arising out of, directly or indirectly, any claim of personal injury or death associated with such unintended or unauthorized use, even if such claim alleges that **onsemi** was negligent regarding the design or manufacture of the part. **onsemi** is an Equal Opportunity/Affirmative Action Employer. This literature is subject to all applicable copyright laws and is not for resale in any manner.

ADDITIONAL INFORMATION

TECHNICAL PUBLICATIONS:
Technical Library: www.onsemi.com/design/resources/technical−documentation
onsemi Website: www.onsemi.com

ONLINE SUPPORT: www.onsemi.com/support
For additional information, please contact your local Sales Representative at
www.onsemi.com/support/sales