MOSFET – N-Channel, SUPERFET® II, Easy-Drive
600 V, 37 A, 99 mΩ

FCH099N60E

Description

SUPERFET II MOSFET is ON Semiconductor's brand−new high voltage super−junction (SJ) MOSFET family that is utilizing charge balance technology for outstanding low on−resistance and lower gate charge performance. This technology is tailored to minimize conduction loss, provide superior switching performance, dv/dt rate and higher avalanche energy. Consequently, SUPERFET II MOSFET easy−drive series offers slightly slower rise and fall times compared to the SUPERFET II MOSFET series. Noted by the "E" part number suffix, this family helps manage EMI issues and allows for easier design implementation. For faster switching in applications where switching losses must be at an absolute minimum, please consider the SUPERFET II MOSFET series.

Features

- Typ. $R_{DS(on)}$ = 87 mΩ
- 650 V @ T_J = 150°C
- Ultra Low Gate Charge (Typ. Q_g = 88 nC)
- Low Effective Output Capacitance (Typ. $C_{oss(eff.)}$ = 309 pF)
- 100% Avalanche Tested
- These Devices are Pb−Free and are RoHS Compliant

Applications

- Telecom / Sever Power Supplies
- Industrial Power Supplies

ON Semiconductor®

www.onsemi.com

V_{DS}	$R_{DS(ON)}$ MAX	I_D MAX
600 V	99 mΩ @ 10 V	37 A

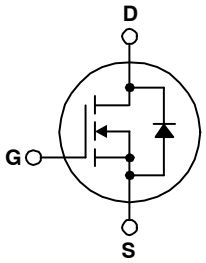

N-CHANNEL MOSFET

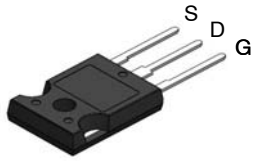

TO−247−3LD
CASE 340CK

MARKING DIAGRAM

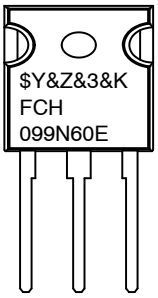

$Y	= ON Semiconductor Logo
&Z	= Assembly Plant Code
&3	= Numeric Date Code
&K	= Lot Code
FCH099N60E	= Specific Device Code

ORDERING INFORMATION

See detailed ordering and shipping information on page 2 of this data sheet.

© Semiconductor Components Industries, LLC, 2015

December, 2019 − Rev. 2

Publication Order Number:
FCH099N60E/D

ABSOLUTE MAXIMUM RATINGS (T_C = 25°C unless otherwise noted)

Symbol	Parameter		FCH099N60E	Unit
V_{DSS}	Drain to Source Voltage		600	V
V_{GSS}	Gate to Source Voltage	– DC	±20	V
		– AC (f > 1 Hz)	±30	
I_D	Drain Current:	– Continuous (T_C = 25°C)	37	A
		– Continuous (T_C = 100°C)	24	
I_{DM}	Drain Current:	– Pulsed (Note 1)	111	A
E_{AS}	Single Pulsed Avalanche Energy (Note 2)		809	mJ
I_{AR}	Avalanche Current (Note 1)		6.8	A
E_{AR}	Repetitive Avalanche Energy (Note 1)		3.57	mJ
dv/dt	MOSFET dv/dt		100	V/ns
	Peak Diode Recovery dv/dt (Note 3)		20	
P_D	Power Dissipation	(T_C = 25°C)	357	W
		– Derate Above 25°C	2.85	W/°C
T_J, T_{STG}	Operating and Storage Temperature Range		–55 to + 150	°C
T_L	Maximum Lead Temperature for Soldering, 1/8″ from Case for 5 Seconds		300	°C

Stresses exceeding those listed in the Maximum Ratings table may damage the device. If any of these limits are exceeded, device functionality should not be assumed, damage may occur and reliability may be affected.

1. Repetitive rating: pulse−width limited by maximum junction temperature.
2. I_{AS} = 6.8 A, R_G = 25 Ω, Starting T_J = 25 °C.
3. I_{SD} ≤ 18.5 A, di/dt ≤ 200 A/μs, V_{DD} ≤ 380 V, Starting T_J = 25 °C.

PACKAGE MARKING AND ORDERING INFORMATION

Part Number	Top Marking	Package	Packing Method	Reel Size	Tape Width	Quantity
FCH099N60E	FCH099N60E	TO−247	Tube	N/A	N/A	30 Units

THERMAL CHARACTERISTICS

Symbol	Parameter	FCH099N60E	Unit
$R_{\theta JC}$	Thermal Resistance, Junction to Case, Max.	0.35	°C/W
$R_{\theta JA}$	Thermal Resistance, Junction to Ambient, Max.	40	

ELECTRICAL CHARACTERISTICS (T_C = 25°C unless otherwise noted)

Symbol	Parameter	Test Condition	Min.	Typ.	Max.	Unit
OFF CHARACTERISTICS						
BV_{DSS}	Drain to Source Breakdown Voltage	I_D = 10 mA, V_{GS} = 0 V, T_J = 25°C	600	–	–	V
		I_D = 10 mA, V_{GS} = 0 V, T_J = 150°C	650	–	–	
$\Delta BV_{DSS}/\Delta T_J$	Breakdown Voltage Temperature Coefficient	I_D = 10 mA, Referenced to 25°C	–	0.7	–	V/°C
I_{DSS}	Zero Gate Voltage Drain Current	V_{DS} = 600 V, V_{GS} = 0 V	–	–	1	μA
		V_{DS} = 480 V, V_{GS} = 0 V, T_C = 125 °C	–	2.1	–	
I_{GSS}	Gate to Body Leakage Current	V_{GS} = ±20 V, V_{DS} = 0 V	–	–	±100	nA
ON CHARACTERISTICS						
$V_{GS(th)}$	Gate Threshold Voltage	V_{GS} = V_{DS}, I_D = 250 μA	2.5	–	3.5	V
$R_{DS(on)}$	Static Drain to Source On Resistance	V_{GS} = 10 V, I_D = 18.5 A	–	87	99	mΩ
g_{FS}	Forward Transconductance	V_{DS} = 20 V, I_D = 18.5 A	–	31.4	–	S
DYNAMIC CHARACTERISTICS						
C_{iss}	Input Capacitance	V_{DS} = 380 V, V_{GS} = 0 V, f = 1 MHz	–	2604	3465	pF
C_{oss}	Output Capacitance		–	75	100	pF
C_{rss}	Reverse Transfer Capacitance		–	13.9	20	pF
$C_{oss(eff.)}$	Effective Output Capacitance	V_{DS} = 0 V to 480 V, V_{GS} = 0 V	–	309	–	pF
$Q_{g(tot)}$	Total Gate Charge at 10 V	V_{DS} = 380 V, I_D = 18.5 A, V_{GS} = 10 V (Note 4)	–	88	114	nC
Q_{gs}	Gate to Source Gate Charge		–	12	–	nC
Q_{gd}	Gate to Drain “Miller” Charge		–	38	–	nC
ESR	Equivalent Series Resistance	f = 1 MHz	–	0.6	–	Ω
SWITCHING CHARACTERISTICS						
$t_{d(on)}$	Turn-On Delay Time	V_{DD} = 380 V, I_D = 18.5 A, V_{GS} = 10 V, R_g = 4.7 Ω (Note 4)	–	24	58	ns
t_r	Turn−On Rise Time		–	23	56	ns
$t_{d(off)}$	Turn-Off Delay Time		–	92	194	ns
t_f	Turn−Off Fall Time		–	22	54	ns
DRAIN-SOURCE DIODE CHARACTERISTICS						
I_S	Maximum Continuous Source to Drain Diode Forward Current		–	–	37	A
I_{SM}	Maximum Pulsed Drain to Source Diode Forward Current		–	–	111	A
V_{SD}	Drain to Source Diode Forward Voltage	V_{GS} = 0 V, I_{SD} = 18.5 A	–	–	1.2	V
t_{rr}	Reverse Recovery Time	V_{GS} = 0 V, I_{SD} = 18.5 A, dI_F/dt = 100 A/μs	–	387	–	ns
Q_{rr}	Reverse Recovery Charge		–	7.3	–	μC

Product parametric performance is indicated in the Electrical Characteristics for the listed test conditions, unless otherwise noted. Product performance may not be indicated by the Electrical Characteristics if operated under different conditions.

4. Essentially independent of operating temperature.

TYPICAL CHARACTERISTICS

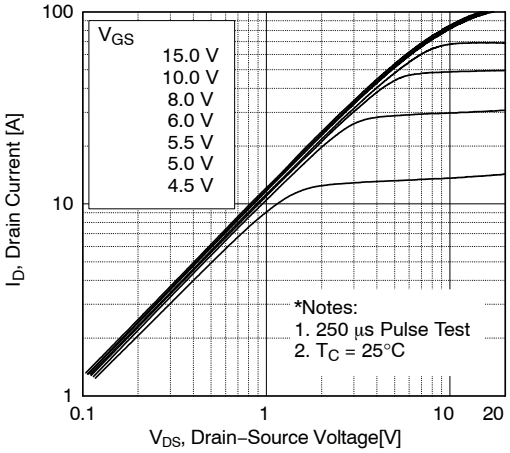

Figure 1. On−Region Characteristics

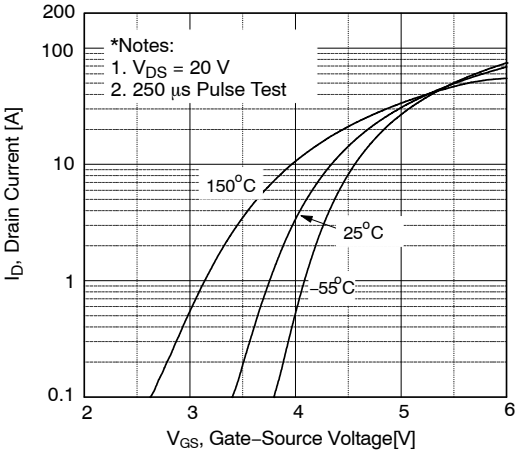

Figure 2. Transfer Characteristics

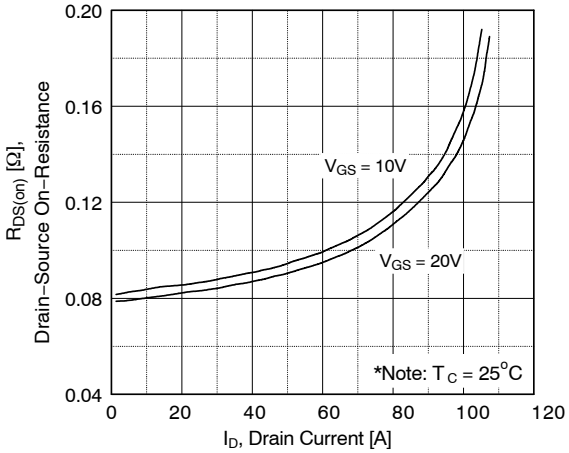

Figure 3. On−Resistance Variation vs. Drain Current and Gate Voltage

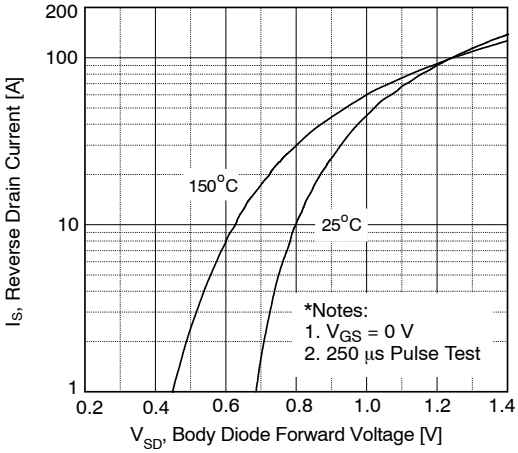

Figure 4. Body Diode Forward Voltage Variation vs. Source Current and Temperature

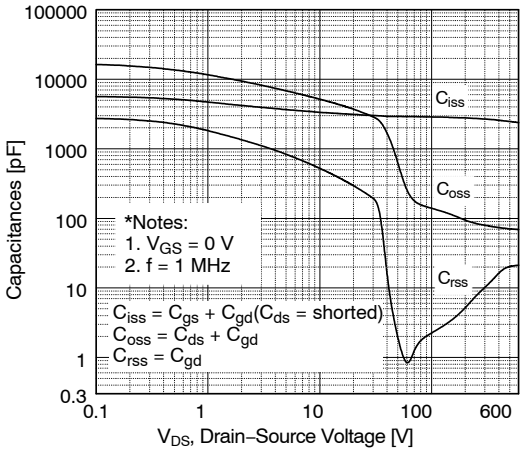

Figure 5. Capacitance Characteristics

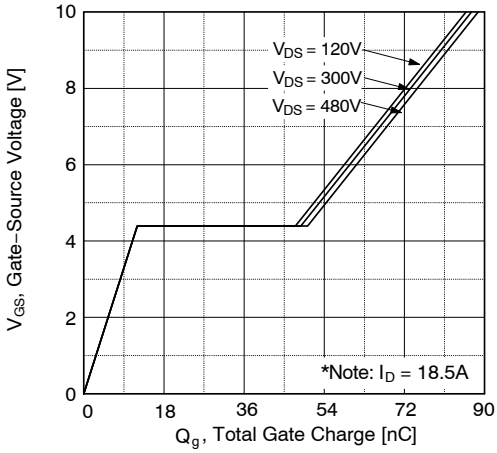

Figure 6. Gate Charge Characteristics

TYPICAL CHARACTERISTICS

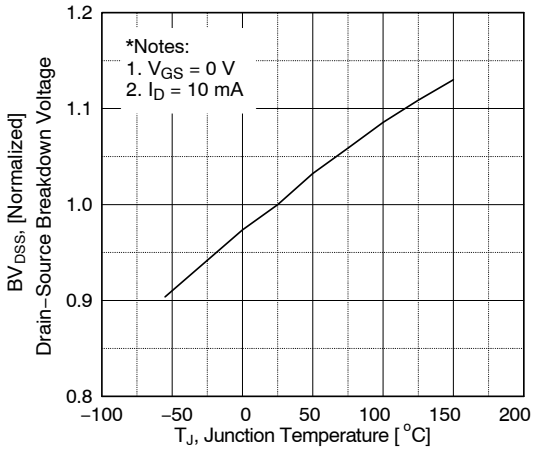

Figure 7. Breakdown Voltage Variation vs. Temperature

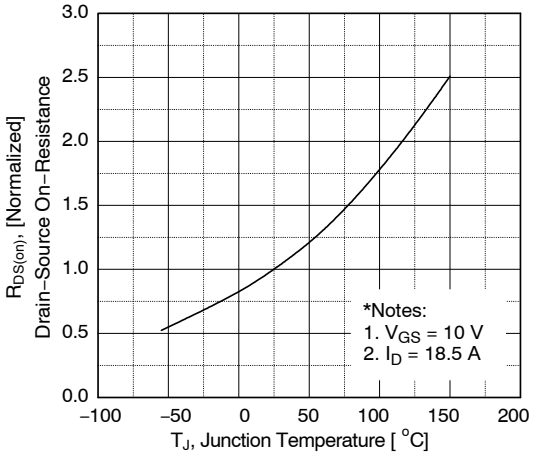

Figure 8. On−Resistance Variation vs. Temperature

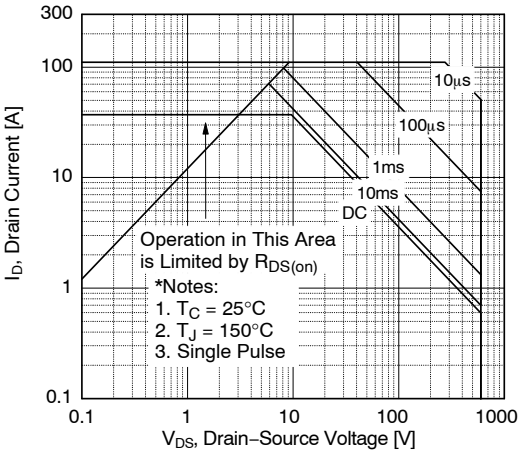

Figure 9. Maximum Safe Operating Area

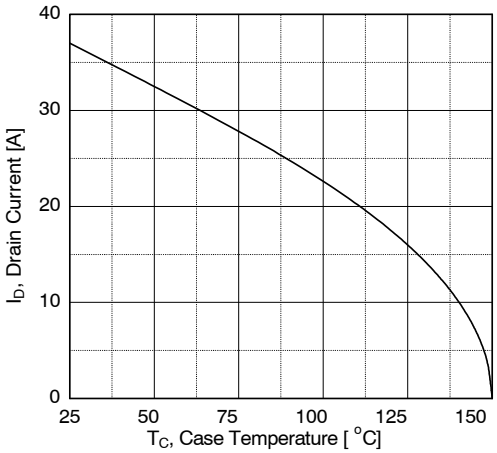

Figure 10. Maximum Drain Current vs. Case Temperature

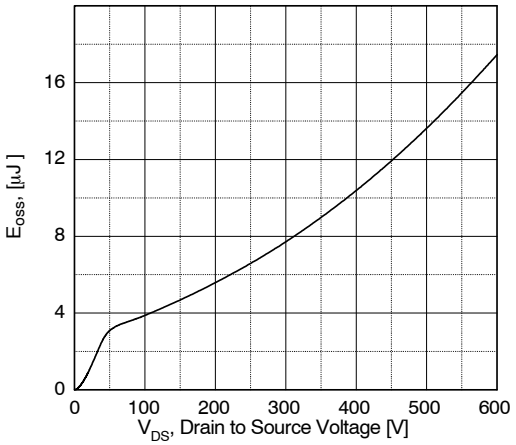

Figure 11. Eoss vs. Drain to Source Voltage

TYPICAL CHARACTERISTICS

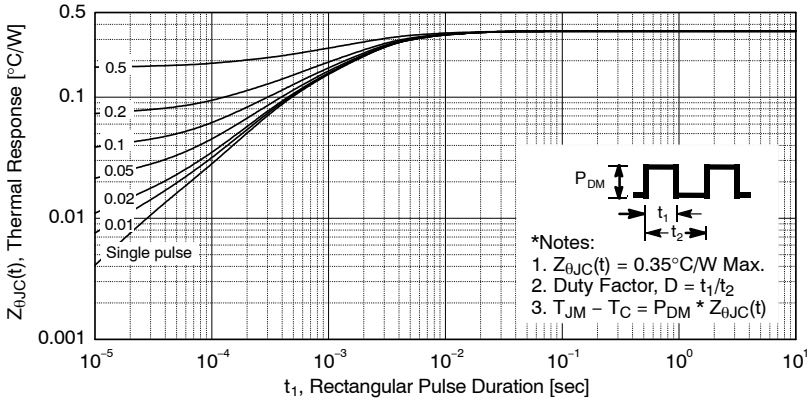

Figure 12. Transient Thermal Response Curve

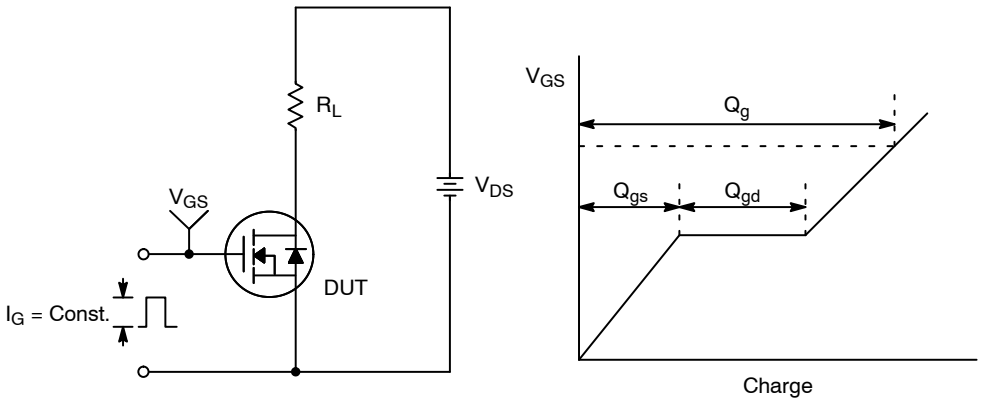

Figure 13. Gate Charge Test Circuit & Waveform

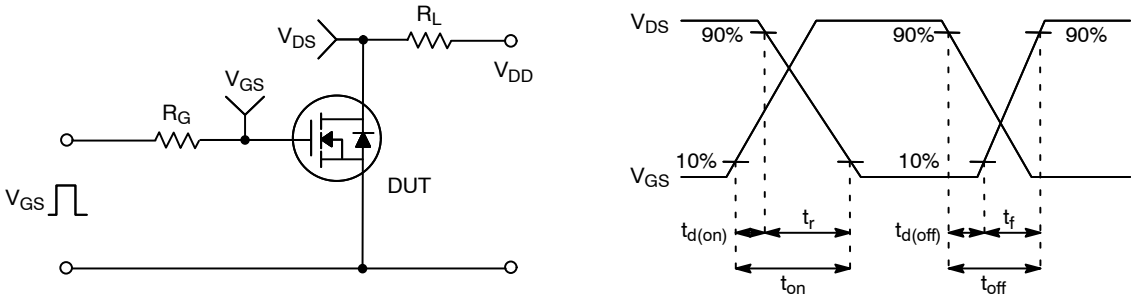

Figure 14. Resistive Switching Test Circuit & Waveforms

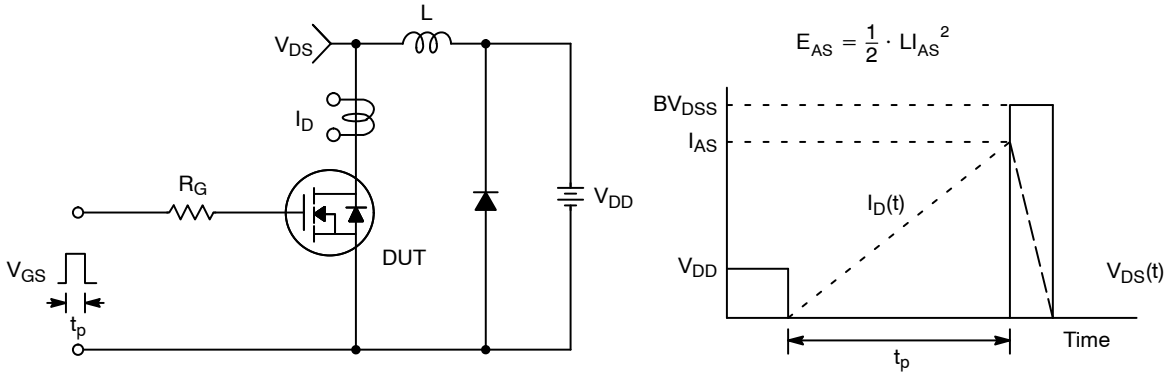

Figure 15. Unclamped Inductive Switching Test Circuit & Waveforms

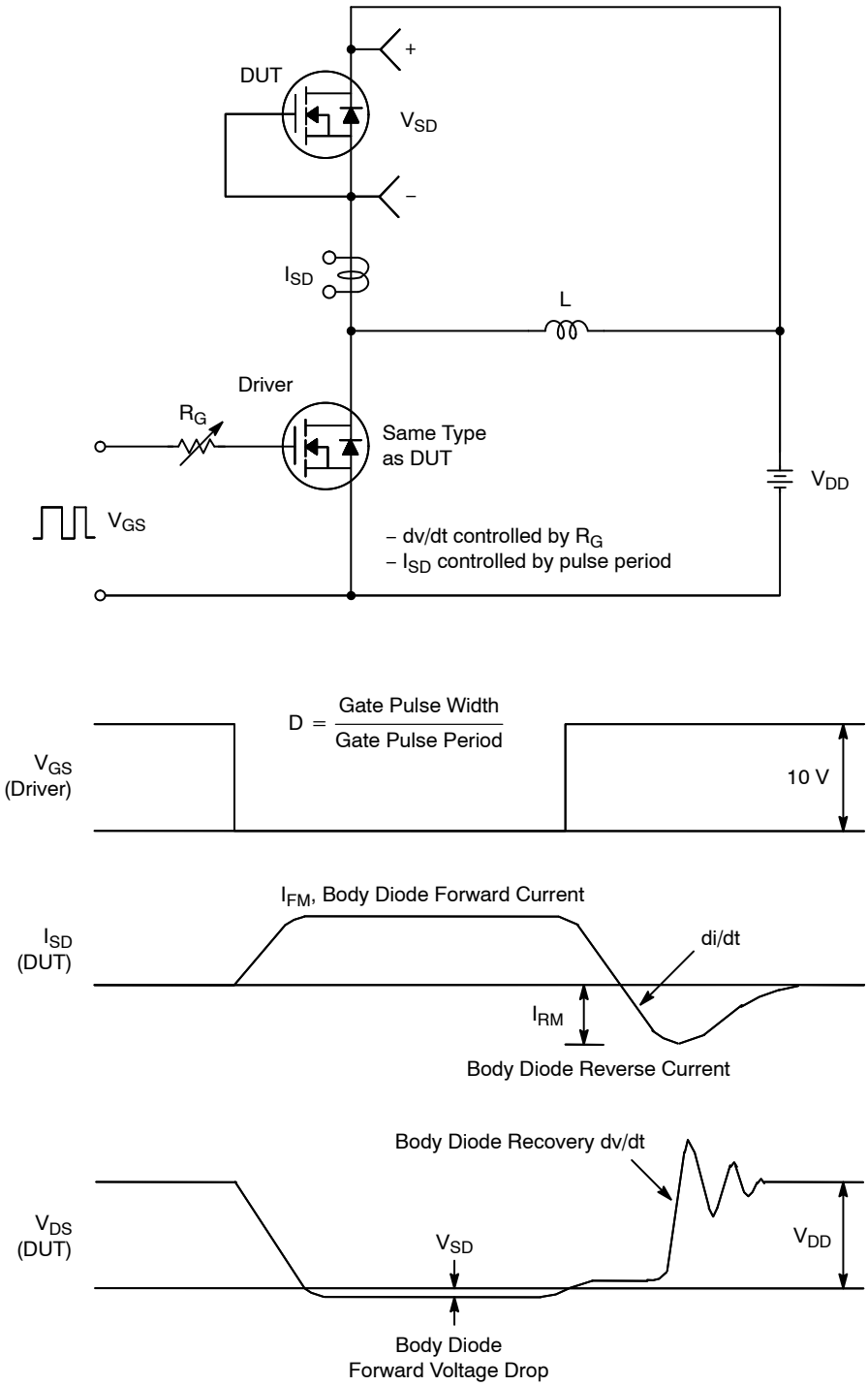

Figure 16. Peak Diode Recovery dv/dt Test Circuit & Waveforms

SUPERFET is a registered trademark of Semiconductor Components Industries, LLC (SCILLC) or its subsidiaries in the United States and/or other countries.

TO−247−3LD SHORT LEAD
CASE 340CK
ISSUE A

DATE 31 JAN 2019

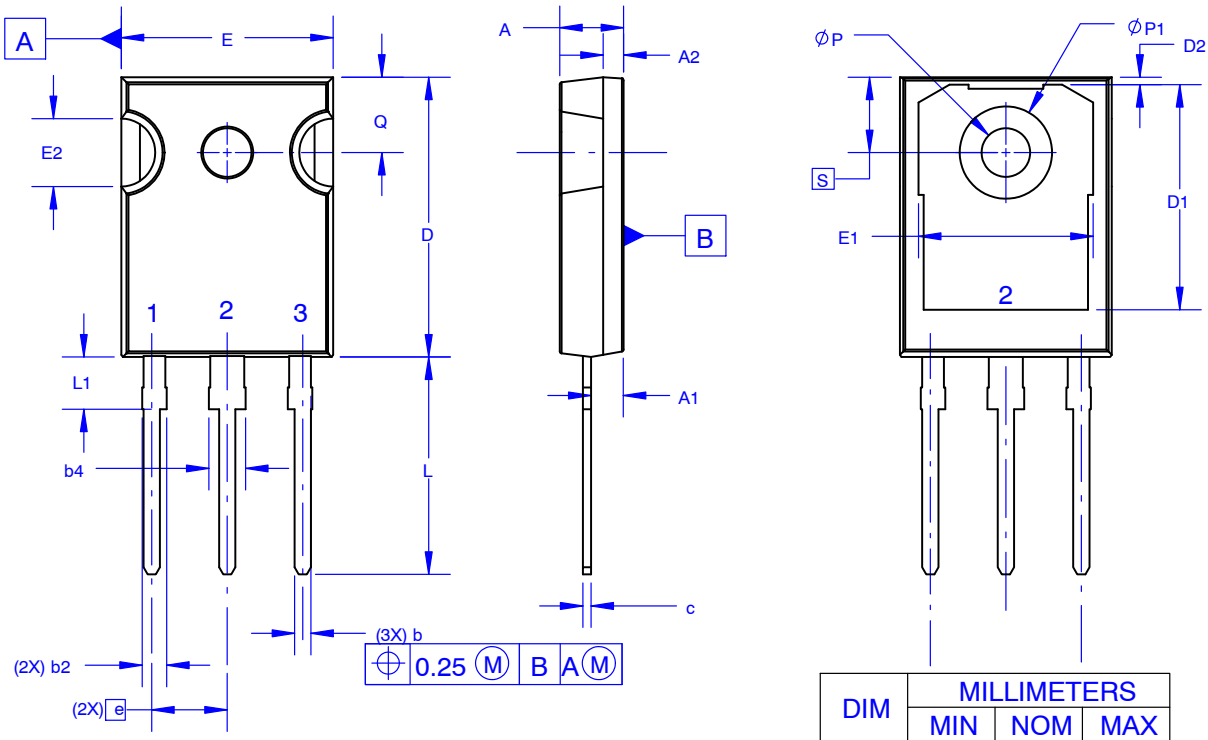

DIM	MILLIMETERS		
	MIN	NOM	MAX
A	4.58	4.70	4.82
A1	2.20	2.40	2.60
A2	1.40	1.50	1.60
b	1.17	1.26	1.35
b2	1.53	1.65	1.77
b4	2.42	2.54	2.66
c	0.51	0.61	0.71
D	20.32	20.57	20.82
D1	13.08	~	~
D2	0.51	0.93	1.35
E	15.37	15.62	15.87
E1	12.81	~	~
E2	4.96	5.08	5.20
e	~	5.56	~
L	15.75	16.00	16.25
L1	3.69	3.81	3.93
ØP	3.51	3.58	3.65
ØP1	6.60	6.80	7.00
Q	5.34	5.46	5.58
S	5.34	5.46	5.58

NOTES: UNLESS OTHERWISE SPECIFIED.

A. DIMENSIONS ARE EXCLUSIVE OF BURRS, MOLD FLASH, AND TIE BAR EXTRUSIONS.
B. ALL DIMENSIONS ARE IN MILLIMETERS.
C. DRAWING CONFORMS TO ASME Y14.5 - 2009.
D. DIMENSION A1 TO BE MEASURED IN THE REGION DEFINED BY L1.
E. LEAD FINISH IS UNCONTROLLED IN THE REGION DEFINED BY L1.

GENERIC MARKING DIAGRAM*

AYWWZZ
XXXXXXX
XXXXXXX
o

XXXX = Specific Device Code
A = Assembly Location
Y = Year
WW = Work Week
ZZ = Assembly Lot Code

*This information is generic. Please refer to device data sheet for actual part marking. Pb−Free indicator, "G" or microdot "▪", may or may not be present. Some products may not follow the Generic Marking.

DOCUMENT NUMBER:	98AON13851G	Electronic versions are uncontrolled except when accessed directly from the Document Repository. Printed versions are uncontrolled except when stamped "CONTROLLED COPY" in red.
DESCRIPTION:	TO−247−3LD SHORT LEAD	PAGE 1 OF 1

onsemi and onsemi are trademarks of Semiconductor Components Industries, LLC dba **onsemi** or its subsidiaries in the United States and/or other countries. **onsemi** reserves the right to make changes without further notice to any products herein. **onsemi** makes no warranty, representation or guarantee regarding the suitability of its products for any particular purpose, nor does **onsemi** assume any liability arising out of the application or use of any product or circuit, and specifically disclaims any and all liability, including without limitation special, consequential or incidental damages. **onsemi** does not convey any license under its patent rights nor the rights of others.

onsemi, onsemi, and other names, marks, and brands are registered and/or common law trademarks of Semiconductor Components Industries, LLC dba "**onsemi**" or its affiliates and/or subsidiaries in the United States and/or other countries. **onsemi** owns the rights to a number of patents, trademarks, copyrights, trade secrets, and other intellectual property. A listing of **onsemi**'s product/patent coverage may be accessed at www.onsemi.com/site/pdf/Patent−Marking.pdf. **onsemi** reserves the right to make changes at any time to any products or information herein, without notice. The information herein is provided "as−is" and **onsemi** makes no warranty, representation or guarantee regarding the accuracy of the information, product features, availability, functionality, or suitability of its products for any particular purpose, nor does **onsemi** assume any liability arising out of the application or use of any product or circuit, and specifically disclaims any and all liability, including without limitation special, consequential or incidental damages. Buyer is responsible for its products and applications using **onsemi** products, including compliance with all laws, regulations and safety requirements or standards, regardless of any support or applications information provided by **onsemi**. "Typical" parameters which may be provided in **onsemi** data sheets and/or specifications can and do vary in different applications and actual performance may vary over time. All operating parameters, including "Typicals" must be validated for each customer application by customer's technical experts. **onsemi** does not convey any license under any of its intellectual property rights nor the rights of others. **onsemi** products are not designed, intended, or authorized for use as a critical component in life support systems or any FDA Class 3 medical devices or medical devices with a same or similar classification in a foreign jurisdiction or any devices intended for implantation in the human body. Should Buyer purchase or use **onsemi** products for any such unintended or unauthorized application, Buyer shall indemnify and hold **onsemi** and its officers, employees, subsidiaries, affiliates, and distributors harmless against all claims, costs, damages, and expenses, and reasonable attorney fees arising out of, directly or indirectly, any claim of personal injury or death associated with such unintended or unauthorized use, even if such claim alleges that **onsemi** was negligent regarding the design or manufacture of the part. **onsemi** is an Equal Opportunity/Affirmative Action Employer. This literature is subject to all applicable copyright laws and is not for resale in any manner.

ADDITIONAL INFORMATION

TECHNICAL PUBLICATIONS:
Technical Library: www.onsemi.com/design/resources/technical−documentation
onsemi Website: www.onsemi.com

ONLINE SUPPORT: www.onsemi.com/support
For additional information, please contact your local Sales Representative at
www.onsemi.com/support/sales