GAP Interface Specification

Interface Specification
RW-BLE-GAP-IS
Version 10.13
2022-03-31

RivieraWaves
http://www.rivierawaves.com/

RivieraWaves confidential. This document is copyrighted and released under CDA or NDA only. Do not copy or distribute without written authorization from RivieraWaves. Please check with RivieraWaves that this document is the latest release.

Revision History

Version	Date	Revision Description	Author
1.00	2011-12-21	Update 1.0	KY
2.06	2014-03-11	Update 2.0	FBE/LT
7.00	2014-06-30	BLE 4.1 API update	FBE/CM/MV
8.00	2015-06-24	BLE 4.2 API update	SB
9.0	2017-03-09	BLE 5.0 API update	FBE/LT
10.0	2018-10-23	BLE 5.1 API update	FBE
10.1	2018-12-06	Read P-256 Public Key force generation of a new key	FBE
10.2	2019-01-25	Update on MTU setting when Secure Connections enabled	KY
10.3	2019-03-06	Precision on GAPC_SET_PREF_SLAVE_LATENCY_CMD	VLE
10.4	2019-04-02	Update of gap_auth enumerator Added Pairing mode bits in GAPM_SET_DEV_CONFIG_CMD	FBE/KY
10.5	2019-05-28	Add new IQ report message for LE RX Test mode	FBE
10.6	2019-10-01	Update meaning of parameters in GAPC_PHY_IND message	FBE
10.7	2019-12-04	To clarify, change auth field in connection confirmation and bond indication to pairing level. Make presence of Resolvable Private Address Only characteristic configurable, and allows client to read this characteristic	FBE
10.8	2020-02-19	Add new vendor specific command to control RX time and size of a connection	FBE
10.9	2020-06-03	Set Device Configuration: Change RPA configuration range description	FBE
10.10	2020-10-23	Update OOB secure connection API to enable generation of OOB data before any connection	FBE
10.11	2020-11-03	Added GAPC_PHY_OPT table, gapc_set_phy	KY
10.12	2020-11-23	Fix inconsistency in CTE command and event	FBE
10.13	2022-03-31	Add GAPC_SET_PRIO_ELEVATION_CMD message Add missing operation codes for GAPM_GET_DEV_INFO_CMD	LT

RivieraWaves confidential. This document is copyrighted and released under CDA or NDA only. Do not copy or distribute without written authorization from RivieraWaves. Please check with RivieraWaves that this document is the latest release.

Table of Contents

Revision History 2
Table of Contents 3
List of Tables 7
1 Overview 9
1.1 Document Overview 10
1.2 Protocol Overview 11
1.3 Implementation Overview 12
2 Device Roles 13
3 Default Type and Enumeration Definition 14
3.1.1 Enumerations 15
3.1.2 Structures 19
4 GAP Manager (GAPM) 21
4.1 Operations Flags 22
4.2 Generic Interface 24
4.2.1 GAPM_CMP_EVT 24
4.3 Default Operations 25
4.3.1 GAPM_RESET_CMD 26
4.4 Configuration Operations 27
4.4.1 GAPM_SET_DEV_CONFIG_CMD 29
4.4.2 GAPM_SET_CHANNEL_MAP_CMD 31
4.4.3 GAPM_LIST_SET_CMD 32
4.4.4 GAPM_GET_RAL_ADDR_CMD 33
4.4.5 GAPM_RAL_ADDR_IND 34
4.4.6 GAPM_LE_TEST_MODE_CTRL_CMD 35
4.4.7 GAPM_LE_TEST_END_IND 36
4.4.8 GAPM_LE_TEST_IQ_REPORT_IND 37
4.5 Local Device Information 38
4.5.1 GAPM_GET_DEV_INFO_CMD 39
4.5.2 GAPM_DEV_VERSION_IND 40
4.5.3 GAPM_DEV_BDADDR_IND 41
4.5.4 GAPM_DEV_ADV_TX_POWER_IND 42
4.5.5 GAPM_DBG_MEM_INFO_IND (DEBUG ONLY) 43
4.5.6 GAPM_SUGG_DFLT_DATA_LEN_IND 44
4.5.7 GAPM_MAX_DATA_LEN_IND 45
4.5.8 GAPM_LIST_SIZE_IND 46
4.5.9 GAPM_ANTENNA_INF_IND 47
4.6 Security Manager Toolbox 48

4.6.1 GAPM_RESOLV_ADDR_CMD 49
4.6.2 GAPM_ADDR_SOLVED_IND 50
4.6.3 GAPM_GEN_RAND_ADDR_CMD 51
4.6.4 GAPM_GEN_RAND_NB_CMD 52
4.6.5 GAPM_GEN_RAND_NB_IND 53
4.6.6 GAPM_USE_ENC_BLOCK_CMD 54
4.6.7 GAPM_USE_ENC_BLOCK_IND 55
4.6.8 GAPM_SET_IRK_CMD 56
4.7 Air Operations 57
4.7.1 Enumerations 58
4.7.2 Structures 64
4.7.3 GAPM_ACTIVITY_CREATE_CMD 67
4.7.4 GAPM_ACTIVITY_START_CMD 68
4.7.5 GAPM_ACTIVITY_STOP_CMD 69
4.7.6 GAPM_ACTIVITY_DELETE_CMD 70
4.7.7 GAPM_ACTIVITY_CREATED_IND 71
4.7.8 GAPM_ACTIVITY_STOPPED_IND 72
4.7.9 GAPM_SET_ADV_DATA_CMD 73
4.7.10 GAPM_EXT_ADV_REPORT_IND 74
4.7.11 GAPM_SCAN_REQ_IND 75
4.7.12 GAPM_SYNC_ESTABLISHED_IND 76
4.7.13 GAPM_PEER_NAME_IND 77
4.7.14 GAPM_PER_ADV_REPORT_CTRL_CMD 78
4.7.15 GAPM_PER_SYNC_IQ_SAMPLING_CTRL_CMD 79
4.7.16 GAPM_PER_ADV_IQ_REPORT_IND 80
4.7.17 GAPM_PER_ADV_CTE_TX_CTL_CMD 81
4.8 LE Protocol/Service Multiplexer management 82
4.8.1 GAPM_LEPSM_REGISTER_CMD 83
4.8.2 GAPM_LEPSM_UNREGISTER_CMD 84
4.9 Profile Configuration 85
4.9.1 GAPM_PROFILE_TASK_ADD_CMD 86
4.9.2 GAPM_PROFILE_ADDED_IND 87
4.10 Secure Connection 88
4.10.1 GAPM_GET_PUB_KEY_CMD 89
4.10.2 GAPM_PUB_KEY_IND 90
4.10.3 GAPM_GEN_DH_KEY_CMD 91
4.10.4 GAPM_GEN_DH_KEY_IND 92
4.10.5 GAPM_GEN_OOB_DATA_CMD 92

4.10.6 GAPM_OOB_DATA_IND 92
5 GAP Controller (GAPC) 93
5.1 Operations Flags 94
5.2 Generic Interface 96
5.2.1 GAPC_CMP_EVT 96
5.3 Connection Information and Management 97
5.3.1 GAPC_CONNECTION_REQ_IND 97
5.3.2 GAPC_CONNECTION_CFM 98
5.3.3 GAPC_DISCONNECT_CMD 100
5.3.4 GAPC_DISCONNECT_IND 101
5.4 Local and Peer Device Information 102
5.4.1 GAPC_GET_INFO_CMD 102
5.4.2 GAPC_PEER_ATT_INFO_IND 104
5.4.3 GAPC_PEER_VERSION_IND 105
5.4.4 GAPC_PEER_FEATURES_IND 106
5.4.5 GAPC_CON_RSSI_IND 107
5.4.6 GAPC_CON_CHANNEL_MAP_IND 108
5.4.7 GAPC_LE_PING_TO_VAL_IND 109
5.4.8 GAPC_SET_LE_PING_TO_CMD 110
5.4.9 GAPC_GET_DEV_INFO_REQ_IND 111
5.4.10 GAPC_GET_DEV_INFO_CFM 112
5.4.11 GAPC_LE_PKT_SIZE_IND 113
5.4.12 GAPC_SET_LE_PKT_SIZE_CMD 114
5.4.13 GAPC_SIGN_COUNTER_IND 115
5.4.14 GAPC_SET_DEV_INFO_REQ_IND 116
5.4.15 GAPC_SET_DEV_INFO_CFM 117
5.5 Connection Parameters Management 118
5.5.1 GAPC_PARAM_UPDATE_CMD 121
5.5.2 GAPC_PARAM_UPDATE_REQ_IND 122
5.5.3 GAPC_PARAM_UPDATE_CFM 123
5.5.4 GAPC_PARAM_UPDATED_IND 124
5.5.5 GAPC_SET_PREF_SLAVE_EVT_DUR_CMD 125
5.5.6 GAPC_SET_PREF_SLAVE_LATENCY_CMD 126
5.5.7 GAPC_SET_MAX_RX_SIZE_AND_TIME_CMD 127
5.5.8 GAPC_SET_PRIO_ELEVATION_CMD 128
5.6 Bonding Procedure 129
5.6.1 GAPC_BOND_CMD 132
5.6.2 GAPC_BOND_REQ_IND 133

5.6.3 GAPC_BOND_CFM 134
5.6.4 GAPC_BOND_IND 135
5.6.5 GAPC_KEY_PRESS_NOTIFICATION_CMD 136
5.6.6 GAPC_KEY_PRESS_NOTIFICATION_IND 137
5.7 Encryption Procedure 138
5.7.1 GAPC_ENCRYPT_CMD 139
5.7.2 GAPC_ENCRYPT_REQ_IND 140
5.7.3 GAPC_ENCRYPT_CFM 141
5.7.4 GAPC_ENCRYPT_IND 142
5.8 Security Request Procedure 143
5.8.1 GAPC_SECURITY_CMD 144
5.8.2 GAPC_SECURITY_IND 145
5.9 PHY Management 146
5.9.1 GAPC_SET_PHY_CMD 147
5.9.2 GAPC_LE_PHY_IND 148
5.10 Channel Selection Algorithm 149
5.10.1 GAPC_CHAN_SEL_ALGO_IND 150
5.11 Periodic Sync Transfer 151
5.11.1 GAPC_PER_ADV_SYNC_TRANS_CMD 152
5.12 Constant Tone Extension 153
5.12.1 GAPC_CTE_TX_CFG_CMD 154
5.12.2 GAPC_CTE_RX_CFG_CMD 155
5.12.3 GAPC_CTE_REQ_CTRL_CMD 156
5.12.4 GAPC_CTE_RSP_CTRL_CMD 157
5.12.5 GAPC_CTE_IQ_REPORT_IND 158
5.13 LE Credit Based Connection (aka LE Credit Oriented Channel) 159
References 160

List of Tables

Table 1: Device Role 15
Table 2: IO Capability Values 15
Table 3: OOB Data Present Flag Values 15
Table 4: Authentication Requirements 15
Table 5: Pairing level achieved 16
Table 6: Key Distribution Flags 16
Table 7: Device Security Requirements 16
Table 8: Advertising channel map 17
Table 9: Valid disconnection reasons 17
Table 10: Bit field use to select the preferred TX or RX LE PHY. 0 means no preferences 17
Table 11: Enumeration of TX/RX PHY values 18
Table 12: Modulation index 18
Table 13: Packet Payload type for test mode 18
Table 14: Constant Tone Extension type 18
Table 15: Constant Tone Extension type (bit field) 18
Table 16: BD Address structure 19
Table 17: Low Energy Channel map structure 19
Table 18: Random number structure 19
Table 19: Address information about a device address 19
Table 20: Generic Security key structure 19
Table 21: Device Name 19
Table 22: Slave preferred connection parameters 19
Table 23: Resolving list device information parameters 20
Table 24: I/Q sample 20
Table 25: GAPM Operation Flags 23
Table 26: Privacy Configuration 27
Table 27: Device Attribute write permission requirement 27
Table 28: Device Attribute database configuration 28
Table 29: LE Audio Mode Configuration 28
Table 30: LE Pairing Mode Configuration 28
Table 31: Device address type according to privacy configuration 57
Table 32: Own Address Types 58
Table 33: Advertising Discovery Modes 58
Table 34: Advertising Properties Bit Field Values 59
Table 35: Advertising Types 59
Table 36: PHY Types 59
Table 37: Advertising filter policy 59
Table 38: Scanning Types 60
Table 39: Scanning Properties Bit Field Values 60
Table 40: Duplicate filter policy 61
Table 41: Initiating Types 61
Table 42: Initiating Properties Bit Field Values 61
Table 43: Periodic synchronization types 61
Table 44: Activity Types 62
Table 45: Clock Accuracy 62
Table 46: Report Information Bit field 62
Table 47: Report Types 63
Table 48: Constant Tone Extension sync filtering type (bit field) 63
Table 49: Supported AoA AoD switching sampling rate (bit field) 63
Table 50: Advertising Parameters (Activity Creation) 64
Table 51: Configuration for advertising on primary channel 64
Table 52: Configuration for advertising on secondary channel 64

Table 53: Configuration for periodic advertising 65
Table 54: Additional Advertising Parameters 65
Table 55: Scan Parameters 65
Table 56: Initiating Parameters 65
Table 57: Scan Window Opening Parameters 65
Table 58: Connection Parameters 66
Table 59: Periodic Synchronization Parameters 66
Table 60: Address Configuration for Periodic Advertiser 66
Table 61: Periodic synchronization parameters 66
Table 62: GAPC Operation Flags 95
Table 63: Client bond information (bit field) 98
Table 64: Client supported features (bit field) 98
Table 65: List of device info that should be provided by application 102
Table 66: Device Information Data Union 102
Table 67: Bonding procedure request or information code 129
Table 68: Pairing information structure 129
Table 69: Long Term Key information 129
Table 70: Identity Resolving Key information 129
Table 71: Bond procedure requested information data 133
Table 72: Numeric Comparison structure 133
Table 73: Temporary Key Type 133
Table 74: Bond procedure confirmed information data 134
Table 75: Out of Band Information 134
Table 76: Bond procedure requested information data 135
Table 77: Pairing information 135
Table 78: Coded PHY options 147

1 Overview

The RW-BLE Generic Access Profile (GAP) defines the procedures related to discovery of Bluetooth devices, connection establishment, link management and security establishment aspects of connected Bluetooth devices. Furthermore, it defines procedures related to the use of different LE security levels. See [1].

This document describes common format requirements for parameters accessible on the user interface level.

1.1 Document Overview

This document describes the non-standard interface of the RW-BLE Generic Access Profile implementation. Along this document, the interface messages will be referred to as API messages for the profile block(s).

Their descriptions will include their utility and reason for implementation for a better understanding of the user and the developer that may one day need to interface them from a higher application.

Moreover, it is recommended that the user check the html-based documentation of the RW-BLE Host, which is derived from actual RW-BLE host code and formatted via Doxygen. This material can further provide information on RW-BLE GAP implementation (e.g. data structures, states, message calling).

1.2 Protocol Overview

The RW-BLE GAP has complete and substantial support of the LE GAP (Core 5.0):

- ✓ Five Roles – central, peripheral, broadcaster, scanner and All Roles
- ✓ Broadcast and Scan
- ✓ Modes – Discovery, Connectivity, Bonding
- ✓ Security with Authentication, Encryption and Signing
- ✓ Link Establishment and Detachment
- ✓ Random and Static Addresses
- ✓ Privacy Features
- ✓ Pairing and Key Generation

1.3 Implementation Overview

The RW-BLE GAP is divided into two parts. First task is mono instantiated and manages all application requests that are not related to an established link (Device configuration). This task is the GAP Manager (called GAPM) it also manages creation or suppression of the second type of GAP task: GAP Controller (called GAPC). This task is multi instantiated; one instance of GAPC is created when a connection to a peer device is created and deleted when this connection is terminated. Index of the created task is related to a connection index created for the connection.

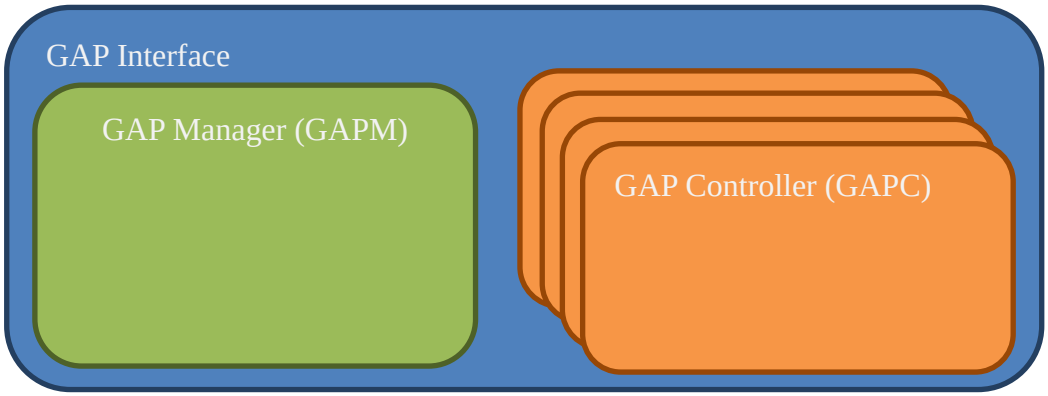

GAP interface schema representing internal tasks

2 Device Roles

The RW-BLE GAP supports **ALL** defined GAP roles. See [2]

Broadcaster

This is a device that sends advertising events, and shall have a transmitter and may have a receiver. This is also known as Advertiser.

Observer

This is a device that receives advertising events, and shall have a receiver and may have a transmitter. This is also known as Scanner.

Peripheral

This is any device that accepts the establishment of an LE physical link using any of the specified connection establishment procedure in the Core specification. When the device is operating on this role, it will assume the Slave role of the link layer connection state. This device shall have both a transmitter and a receiver.

Central

This is any device that initiates the establishment of a physical link. It shall assume the Master role of the link layer connection state. Similarly with the peripheral, this device shall have both a transmitter and a receiver.

All

Device has in same time the central and peripheral role allowing device to be both master and slave of links.

3 Default Type and Enumeration Definition

3.1.1 Enumerations

❖ **gap_role**

Value	Flag	Description
0x00	GAP_ROLE_NONE	No role set yet
0x01	GAP_ROLE_OBSERVER	Observer role
0x02	GAP_ROLE_BROADCASTER	Broadcaster role
0x05	GAP_ROLE_CENTRAL	Master/Central role (has also observer role)
0x0A	GAP_ROLE_PERIPHERAL	Peripheral/Slave role (has also broadcaster role)
0x0F	GAP_ROLE_ALL	Device has all role, both peripheral and central

Table 1: Device Role

❖ **gap_io_cap**

Value	Flag	Description
0x00	GAP_IO_CAP_DISPLAY_ONLY	Display Only
0x01	GAP_IO_CAP_DISPLAY_YES_NO	Display Yes No
0x02	GAP_IO_CAP_KB_ONLY	Keyboard Only
0x03	GAP_IO_CAP_NO_INPUT_NO_OUTPUT	No Input No Output
0x04	GAP_IO_CAP_KB_DISPLAY	Keyboard Display

Table 2: IO Capability Values

❖ **gap_oob**

Value	Flag	Description
0x00	GAP_OOB_AUTH_DATA_NOT_PRESENT	OOB Data not present
0x01	GAP_OOB_AUTH_DATA_PRESENT	OOB data present

Table 3: OOB Data Present Flag Values

❖ **gap_auth**

Value	Flag	Description
0x00	GAP_AUTH_REQ_NO_MITM_NO_BOND	No Man In The Middle (MITM) protection - No Bonding
0x01	GAP_AUTH_REQ_NO_MITM_BOND	No MITM - Bonding
0x04	GAP_AUTH_REQ_MITM_NO_BOND	MITM - No Bonding
0x05	GAP_AUTH_REQ_MITM_BOND	MITM and Bonding
0x0C	GAP_AUTH_REQ_SEC_CON_NO_BOND	Secure Connection - No Bonding
0x0D	GAP_AUTH_REQ_SEC_CON_BOND	Secure Connection and Bonding

Table 4: Authentication Requirements

❖ **gap_pairing_lvl**

Value	Flag	Description
0x00	GAP_PAIRING_UNAUTH	Unauthenticated pairing achieved but without bond data (meaning-less for connection confirmation)
0x04	GAP_PAIRING_AUTH	Authenticated pairing achieved but without bond data (meaning-less for connection confirmation)
0x0C	GAP_PAIRING_SECURE_CON	Secure connection pairing achieved but without bond data (meaning-less for connection confirmation)
0x00	GAP_PAIRING_NO_BOND	No pairing performed with peer device (meaning-less for connection confirmation)
0x01	GAP_PAIRING_BOND_UNAUTH	Peer device bonded through an unauthenticated pairing.
0x05	GAP_PAIRING_BOND_AUTH	Peer device bonded through an authenticated pairing.
0x0D	GAP_PAIRING_BOND_SECURE_CON	Peer device bonded through a secure connection pairing.

Table 5: Pairing level achieved

- **gap_kdist**

Value	Flag	Description
0x00	GAP_KDIST_NONE	No Keys to distribute
0x01	GAP_KDIST_ENCKEY	Encryption key in distribution
0x02	GAP_KDIST_IDKEY	IRK (ID key)in distribution
0x04	GAP_KDIST_SIGNKEY	CSRK (Signature key) in distribution
0x08	GAP_KDIST_LINKKEY	LTK in distribution

Table 6: Key Distribution Flags

- **gap_sec_req**

Value	Flag	Description
0x00	GAP_NO_SEC	No security (no authentication and encryption)
0x01	GAP_SEC1_NOAUTH_PAIR_ENC	Unauthenticated pairing with encryption
0x02	GAP_SEC1_AUTH_PAIR_ENC	Authenticated pairing with encryption
0x03	GAP_SEC2_NOAUTH_DATA_SGN	Unauthenticated pairing with data signing
0x04	GAP_SEC2_AUTH_DATA_SGN	Authentication pairing with data signing

Table 7: Device Security Requirements

- **adv_channel_map**

Bit	Flag	Description
0	ADV_CHNL_37_EN	Channel 37 enabled
1	ADV_CHNL_38_EN	Channel 38 enabled
2	ADV_CHNL_39_EN	Channel 39 enabled

3-7	N/A	Reserved for future use

Table 8: Advertising channel map

❖ **disconnection_reason**

Value	Flag	Description
0x05	CO_ERROR_AUTH_FAILURE	The Authentication Failure error code indicates that pairing or authentication failed due to incorrect results in the pairing or authentication procedure. This could be due to an incorrect PIN or Link Key.
0x13	CO_ERROR_REMOTE_USER_TERM_CON	The Remote User Terminated Connection error code indicates that the user on the remote device terminated the connection.
0x14	CO_ERROR_REMOTE_DEV_TERM_LOW_RESOURCES	The Remote Device Terminated Connection due to Low Resources error code indicates that the remote device terminated the connection because of low resources.
0x15	CO_ERROR_REMOTE_DEV_POWER_OFF	The Remote Device Terminated Connection due to Power Off error code indicates that the remote device terminated the connection because the device is about to power off.
0x1A	CO_ERROR_UNSUPPORTED_REMOTE_FEATURE	The Unsupported Remote Feature error code indicates that the remote device does not support the feature associated with the issued command or LMP PDU.
0x29	CO_ERROR_PAIRING_WITH_UNIT_KEY_NOT_SUP	The Pairing With Unit Key Not Supported error code indicates that it was not possible to pair as a unit key was requested and it is not supported.
0x3B	CO_ERROR_UNACCEPTABLE_CONN_INT	The Unacceptable Connection Interval error code indicates that the remote device terminated the connection because of an unacceptable connection interval.

Table 9: Valid disconnection reasons

❖ **gap_phy**

Value	Flag	Description
0x00	GAP_PHY_ANY	No preferred PHY
0x01	GAP_PHY_LE_1MBPS	LE 1M PHY preferred for an active link
0x02	GAP_PHY_LE_2MBPS	LE 2M PHY preferred for an active link
0x04	GAP_PHY_LE_CODED	LE Coded PHY preferred for an active link

Table 10: Bit field use to select the preferred TX or RX LE PHY. 0 means no preferences

❖ **gap_phy_val**

Value	Flag	Description
0x01	GAP_PHY_1MBPS	LE 1M PHY (TX or RX)
0x02	GAP_PHY_2MBPS	LE 2M PHY (TX or RX)
0x03	GAP_PHY_CODED	LE Coded PHY (RX Only)
0x03	GAP_PHY_125KBPS	LE Coded PHY with S=8 data coding (TX Only)

0x04	GAP_PHY_500KBPS	LE Coded PHY with S=2 data coding (TX Only)

Table 11: Enumeration of TX/RX PHY values

❖ gap_modulation_idx

Value	Flag	Description
0x00	GAP_MODULATION_STANDARD	Assume transmitter will have a standard modulation index
0x01	GAP_MODULATION_STABLE	Assume transmitter will have a stable modulation index

Table 12: Modulation index

❖ gap_pkt_pld_type

Value	Flag	Description
0x00	GAP_PKT_PLD_PRBS9	PRBS9 sequence "11111111100000111101..." (in transmission order)
0x01	GAP_PKT_PLD_REPEATED_11110000	Repeated "11110000" (in transmission order)
0x02	GAP_PKT_PLD_REPEATED_10101010	Repeated "10101010" (in transmission order)
0x03	GAP_PKT_PLD_PRBS15	PRBS15 sequence
0x04	GAP_PKT_PLD_REPEATED_11111111	Repeated "11111111" (in transmission order) sequence
0x05	GAP_PKT_PLD_REPEATED_00000000	Repeated "00000000" (in transmission order) sequence
0x06	GAP_PKT_PLD_REPEATED_00001111	Repeated "00001111" (in transmission order) sequence
0x07	GAP_PKT_PLD_REPEATED_01010101	Repeated "01010101" (in transmission order) sequence

Table 13: Packet Payload type for test mode

❖ gap_cte_type

Value	Flag	Description
0x00	GAP_CTE_AOA	Allow AoA Constant Tone Extension Response
0x01	GAP_CTE_AOD_1US_SLOT	Allow AoD Constant Tone Extension Response with 1 us slots
0x02	GAP_CTE_AOD_2US_SLOT	Allow AoD Constant Tone Extension Response with 2 us slots

Table 14: Constant Tone Extension type

❖ gap_cte_type_bf

Bit	Flag	Description
0	GAP_CTE_AOA_BIT	Allow AoA Constant Tone Extension Response
1	GAP_CTE_AOD_1US_SLOT_BIT	Allow AoD Constant Tone Extension Response with 1 us slots
2	GAP_CTE_AOD_2US_SLOT_BIT	Allow AoD Constant Tone Extension Response with 2 us slots

Table 15: Constant Tone Extension type (bit field)

3.1.2 Structures

❖ bd_addr

Type	Parameters	Description
uint8_t[6]	addr	6-byte array address value

Table 16: BD Address structure

❖ le_chnl_map

Type	Parameters	Description
uint8_t[5]	map	5-byte channel map array

Table 17: Low Energy Channel map structure

❖ rand_nb

Type	Parameters	Description
uint8_t[8]	nb	8-byte array for random number

Table 18: Random number structure

❖ gap_bdaddr

Type	Parameters	Description
bd_addr	addr	BD Address of device
uint8_t	addr_type	Address type of the device 0=public/1=private random (Anonymous type 0xFF only for WL and TX in adv report)

Table 19: Address information about a device address

❖ gap_sec_key

Type	Parameters	Description
uint8_t[16]	key	Key value MSB -> LSB

Table 20: Generic Security key structure

❖ gap_dev_name

Type	Parameters	Description
uint16_t	length	Name length
uint8_t[length]	value	Name value

Table 21: Device Name

❖ gap_slv_pref

Type	Parameters	Description
uint16_t	con_intv_min	Connection interval minimum N Value Time = N * 1.25 ms
uint16_t	con_intv_max	Connection interval maximum N Value Time = N * 1.25 ms
uint16_t	slave_latency	Slave latency (intervals)
uint16_t	conn_timeout	Connection supervision timeout multiplier N Value Time = N * 10 ms

Table 22: Slave preferred connection parameters

❖ gap_ral_dev_info

Type	Parameters	Description
struct gap_bdaddr	addr	Peer Identity
uint8_t	priv_mode	Privacy Mode
uint8_t[16]	peer_irk	Peer IRK
uint8_t[16]	local_irk	Local IRK

Table 23: Resolving list device information parameters

❖ gap_iq_sample

Type	Parameters	Description
int8_t	i	I sample
int8_t	q	Q sample

Table 24: I/Q sample

4 GAP Manager (GAPM)

Generic Access Profile Manager (GAPM) is the GAP task used to manage device configuration:

- Discover/Scan for Bluetooth LE devices
- Send advertising data for device that scanning or establishing a connection
- Start connection establishment.

It also manages privacy features of local device and provides an interface to perform Bluetooth address resolution.

Messages exchanged to and from the RW-BLE GAP can be any of the following:

- ✓ **Command**: Always completed with "**complete event**" message
- ✓ **Indication**
- ✓ **Indication request** that requires a **confirmation** message from application.

The GAP Manager block has handlers for these messages, defined in gapm_task files (.h/.c).

4.1 Operations Flags

The block uses request flag options embedded in the interface message sent to GAP Manager. This flag ensures correct handling of the operation request from the application.

Value	Flag	Description
0x00	GAPM_NO_OP	No operation
	Default operations	
0x01	GAPM_RESET	Reset BLE subsystem: LL and HL.
	Configuration operations	
0x03	GAPM_SET_DEV_CONFIG	Set device configuration
0x04	GAPM_SET_CHANNEL_MAP	Set device channel map
	Retrieve device information	
0x05	GAPM_GET_DEV_VERSION	Get Local device version
0x06	GAPM_GET_DEV_BDADDR	Get Local device BD Address
0x07	GAPM_GET_DEV_ADV_TX_POWER	Get device advertising power level
	Operation on White list	
0x08	GAPM_GET_WLIST_SIZE	Get White List Size.
0x09	GAPM_GET_ANTENNA_INFO	Retrieve Antenna information
	Security / Encryption Toolbox	
0x17	GAPM_RESOLV_ADDR	Resolve device address
0x18	GAPM_GEN_RAND_ADDR	Generate a random address
0x19	GAPM_USE_ENC_BLOCK	Use the controller's AES-128 block
0x1A	GAPM_GEN_RAND_NB	Generate a 8-byte random number
	Profile Management	
0x1B	GAPM_PROFILE_TASK_ADD	Create new task for specific profile
	DEBUG	
0x1C	GAPM_DBG_GET_MEM_INFO	Get memory usage
0x1D	GAPM_PLF_RESET	Perform a platform reset
	Data Length Extension	
0x1E	GAPM_SET_SUGGESTED_DFLT_LE_DATA_LEN	Set Suggested Default LE Data Length
0x1F	GAPM_GET_SUGGESTED_DFLT_LE_DATA_LEN,	Get Suggested Default LE Data Length
0x20	GAPM_GET_MAX_LE_DATA_LEN	Get Maximum LE Data Length
	Operation on Resolving List	
0x21	GAPM_GET_RAL_SIZE	Get resolving address list size
0x22	GAPM_GET_RAL_LOC_ADDR	Get resolving local address
0x23	GAPM_GET_RAL_PEER_ADDR	Get resolving peer address
	Manage IRK	
0x28	GAPM_SET_IRK	Change current IRK
	LE Protocol/Service Multiplexer Management	
0x29	GAPM_LEPSM_REG	Register a LE Protocol/Service Multiplexer
0x2A	GAPM_LEPSM_UNREG	Unregister a LE Protocol/Service Multiplexer

	LE Direct Test Mode	
0x2B	GAPM_LE_TEST_STOP	Stop the test mode
0x2C	GAPM_LE_TEST_RX_START	Start RX Test Mode
0x2D	GAPM_LE_TEST_TX_START	Start TX Test Mode
	Secure Connection	
0x2E	GAPM_GEN_DH_KEY	Generate DH -Key
0x2F	GAPM_GET_PUB_KEY	Retrieve Public Key
0x30	GAPM_GEN_OOB_DATA	Generate OOB Data
	List Management	
0x90	GAPM_SET_WL	Set White List content
0x91	GAPM_SET_RAL	Set Resolving Address List content
0x92	GAPM_SET_PAL	Set Periodic Advertiser List content
0x95	GAPM_GET_PAL_SIZE	Get size of Periodic Advertiser List
	Air Operations	
0xA0	GAPM_CREATE_ADV_ACTIVITY	Create advertising activity
0xA1	GAPM_CREATE_SCAN_ACTIVITY	Create scan activity
0xA2	GAPM_CREATE_INIT_ACTIVITY	Create initiating activity
0xA3	GAPM_CREATE_PERIOD_SYNC_ACTIVITY	Create periodic synchronization activity
0xA4	GAPM_START_ACTIVITY	Start a given activity
0xA5	GAPM_STOP_ACTIVITY	Stop a given activity
0xA6	GAPM_STOP_ALL_ACTIVITIES	Stop all activities
0xA7	GAPM_DELETE_ACTIVITY	Delete a given activity
0xA8	GAPM_DELETE_ALL_ACTIVITIES	Delete all activities
0xA9	GAPM_SET_ADV_DATA	Set Advertising Data
0xAA	GAPM_SET_SCAN_RSP_DATA	Set Scan Response Data
0xAB	GAPM_SET_PERIOD_ADV_DATA	Set Periodic Advertising Data
0xAC	GAPM_GET_NB_ADV_SETS	Read number of advertising sets supported by the controller
0xAD	GAPM_GET_MAX_LE_ADV_DATA_LEN	Get maximum length of advertising data a supported by the controller
0xAE	GAPM_GET_DEV_TX_PWR	Get minimum and maximum transmit powers supported by the controller
0xAF	GAPM_GET_DEV_RF_PATH_COMP	Get the RF Path Compensation values used in the TX Power Level and RSSI calculation
0xB0	GAPM_PER_ADV_REPORT_CTRL	Enable/Disable reception of periodic advertising report
0xB1	GAPM_PER_SYNC_IQ_SAMPLING_CTRL	Enable / Disable IQ sampling
0xB2	GAPM_PER_ADV_CTE_TX_CTL	Enable / Disable CTE transmission

Table 25: GAPM Operation Flags

4.2 Generic Interface

The generic GAP Manager offers a set of commands that are completed with following command completed event message.

4.2.1 GAPM_CMP_EVT

Parameters:

Type	Parameters	Description
uint8_t	operation	GAPM Operation Code (see Table 25)
uint8_t	status	Status of the operation (see [4])

Description:

This is the generic complete event for GAP operations. All operations trigger this event when operation is finished

4.3 Default Operations

Two kinds of operations exist in GAPM interface. All operation allowing to configure a device are not cancelable while all air operations (such as scanning, advertising or connecting) can be canceled using the cancel operation.

In any case ongoing operations are stopped if software reset of device is requested.

Note: At system startup, all commands will be rejected until an application performs a software reset using the GAPM_RESET_CMD. This ensures that lower layers are properly configured according to Host stack requirements.

4.3.1 GAPM_RESET_CMD

Parameters:

Type	Parameters	Description
uint8_t	operation	GAPM Operation Code (see Table 25): • **GAPM_RESET:** Software reset • **GAPM_PLF_RESET:** Platform reset

Response:

GAPM_CMP_EVT: When operation completed. (Not triggered in case of platform reset)

Description:

Reset the device.

Software reset: This will initialize the RW-BLE Host stack – rearrange to default settings the ATT, GAP, GATT, L2CAP and SMP blocks. Furthermore, this will cause the host to send a reset command down to the link layer part.

Platform reset: Use platform mechanism to reset hardware.

4.4 Configuration Operations

Set of commands used to configure the device:

- Set device role
- Set channel pap
- Manage privacy
- Manage default attribute database

Note: After reception of software reset command, the device role is set to “No Role”, meaning that no air operation can be started. Thus, once a device has been reset, it is mandatory to set its configuration in order to specify it.

❖ **gap_priv_cfg**

Bit	Flag	Description
0	GAP_PRIV_CFG_PRIV_ADDR_BIT	Indicate if identity address is a public (not set) or a random static address (set)
1	N/A	Reserved for future use
2	GAP_PRIV_CFG_PRIV_EN_BIT	Enable or disable use of controller privacy.
3-7	N/A	Reserved for future use

Table 26: Privacy Configuration

❖ **gapm_write_att_perm**

Value	Flag	Description
0x00	GAPM_WRITE_DISABLE	Disable write access
0x01	GAPM_WRITE_NO_AUTH	Enable write access - no authentication required
0x02	GAPM_WRITE_UNAUTH	Write access requires unauthenticated link
0x03	GAPM_WRITE_AUTH	Write access requires authenticated link
0x04	GAPM_WRITE_SEC_CON	Write access requires secure connected link

Table 27: Device Attribute write permission requirement

❖ **gapm_att_cfg_flag**

15	14	13	12	11	10	9	8	7	6	5	4	3	2	1	0
DBG	DBGT	RFU					Rslv. Priv. Addr. Only	RFU	Pref. Con. Par.	Appearance Permission			Name Permission		

Value	Flag	Description
0x0007	GAPM_ATT_NAME_PERM_MASK	Device Name write permission requirements for peer device (see Table 27)
0x00	GAPM_ATT_NAME_PERM_LSB	
0x0038	GAPM_ATT_APPEARENCE_PERM_MASK	Device Appearance write permission requirements for peer device (see Table 27)
0x03	GAPM_ATT_APPEARENCE_PERM_LSB	
0x0040	GAPM_ATT_SLV_PREF_CON_PAR_EN_MASK	Slave Preferred Connection Parameters present in GAP attribute database.
0x06	GAPM_ATT_SLV_PREF_CON_PAR_EN_LSB	
0x4000	GAPM_ATT_DBG_L2CAP_TRAFFIC_EN_MASK	With debug mode enabled, forward all L2CAP traffic to application

0x0E	GAPM_ATT_DBG_L2CAP_TRAFFIC_EN_LSB	
0x0100	GAPM_ATT_RSLV_PRIV_ADDR_ONLY_MASK	Enable presence of Resolvable private address only.
0x08	GAPM_ATT_RSLV_PRIV_ADDR_ONLY_LSB	**This means that after a bond, device must only use resolvable private address**
0x8000	GAPM_ATT_DBG_MODE_EN_MASK	Enable debug mode
0x0F	GAPM_ATT_DBG_MODE_EN_LSB	

Table 28: Device Attribute database configuration

❖ gapm_audio_cfg_flag

15	14	13	12	11	10	9	8	7	6	5	4	3	2	1	0
RFU															AM0

Value	Flag	Description
0x0001	GAPM_MASK_AUDIO_AM0_SUP	LE Audio Mode 0 Supported
0x00	GAPM_POS_AUDIO_AM0_SUP	

Table 29: LE Audio Mode Configuration

❖ gapm_pairing_mode

7	6	5	4	3	2	1	0
RFU						SCP	LP

Bit	Flag	Description
0	GAPM_PAIRING_LEGACY	Legacy Pairing Mode Authorized
1	GAPM_PAIRING_SEC_CON	Secure Connection Pairing Mode Authorized
2-7	N/A	Reserved for future use

Table 30: LE Pairing Mode Configuration

4.4.1 GAPM_SET_DEV_CONFIG_CMD

Parameters:

Type	Parameters	Description
uint8_t	operation	GAPM Operation Code (see Table 25): • **GAPM_SET_DEV_CONFIG**
uint8_t	role	Device Role: Central, Peripheral, Observer or Broadcaster (see Table 1)
Privacy Configuration		
uint16_t	renew_dur	Duration before regenerate device address when privacy is enabled. (1s step) • Allowed range: [1s, 41400s (~11.5 hours)]
struct bd_addr	addr	Provided own static private random address. Valid only if privacy_cfg indicates use of such kind of address.
struct gap_sec_key	irk	Default device IRK used for resolvable random BD address generation (LSB first)
uint8_t	privacy_cfg / addr_type	Bit field exposing local privacy configuration (see Table 26)
Security Configuration		
uint8_t	pairing_mode	Pairing mode authorized (see Table 30)
Attribute database configuration		
uint16_t	gap_start_hdl	GAP service start handle (0 – allocated dynamically)
uint16_t	gatt_start_hdl	GATT service start handle (0 – allocated dynamically)
uint8_t	att_cfg	Attribute database configuration (see Table 28)
Data Length Extension configuration		
uint16_t	sugg_max_tx_octets	Suggested value for the Controller's maximum transmitted number of payload octets to be used
uint16_t	sugg_max_tx_time	Suggested value for the Controller's maximum packet transmission time to be used
L2CAP Configuration		
uint16_t	max_mtu	Maximal MTU value sent during MTU exchange procedure. If provided max_mtu value is less than 23 and no SC support, the value will be set to 23; If provided max_mtu value is under 65 and SC is enabled, the value will be set to 65; if this value is higher than GAP_MAX_LE_MTU (2048 by default), the value will be GAP_MAX_LE_MTU.
uint16_t	max_mps	Maximum Payload Size value that the L2CAP layer entity is capable of accepting. By default MPS equals to MTU avoiding the segmentation of the frames.
uint8_t	max_nb_lecb	Maximum number of LE Credit based connection that can be established
Miscellaneous		
uint8_t	info	Bit field providing additional information. • Bit 0: Support deprecated API and does not support new commands. Valid only if GAP is compiled with support of deprecated API • Bit 1-7: Reserved for future use
LE Audio Mode Supported		
uint16_t	audio_cfg	LE Audio Mode Configuration (see Table 29)
LE PHY Management		
uint8_t	tx_pref_rates	Preferred LE PHY rate for data transmission
uint8_t	rx_pref_rates	Preferred LE PHY rate for data reception
Miscellaneous		
uint16_t	tx_path_comp	RF TX Path Compensation value (from -128dB to 128dB unit is 0.1dB)
uint16_t	rx_path_comp	RF RX Path Compensation value (from -128dB to 128dB unit is 0.1dB)

Response:

GAPM_CMP_EVT: Once the operation is completed.

Description:

Set the device configuration such as:

- Device role
- Manage device address type: Public, Private static or Generated for Privacy

- Internal IRK used to generate resolvable random address
- Set Internal GAP / GATT service start
- Set specific write permissions on the appearance and name attributes in internal GAP database.
- Manage presence of some attribute.
- Configure Data Length Extension features
- Enable or not some Audio modes

Since system does not support dynamic role switching, this command is allowed only when no link is established.

4.4.2 GAPM_SET_CHANNEL_MAP_CMD

Parameters:

Type	Parameters	Description
uint8_t	operation	GAPM Operation Code (see Table 25): • **GAPM_SET_CHANNEL_MAP**: Set device channel map.
le_chnl_map	chmap	Channel map (see Table 17)

Response:

GAPM_CMP_EVT: When operation completed.

Description:

Set the channel map of the device.

Note: The Channel map can be modified only if device is Central (See Table 1)

4.4.3 GAPM_LIST_SET_CMD

Parameters:

Type	Parameters	Description
uint8_t	operation	GAPM Operation Code (see Table 25): ▪ **GAPM_SET_WL: Set content of the White List** ▪ **GAPM_SET_PAL: Set content of the Periodic Advertiser List** ▪ **GAPM_SET_RAL: Set content of the Resolving List**
uint8_t	size	Number of entries to be added in the list. Use 0 if content of indicated list has simply to be cleared.
Only one of the following parameters is present based on selected operation		
struct gap _bdaddr [size]	wl_info	List of addresses to be added in the White List (see Table 19) (Present only if operation = GAPM_SET_WL)
struct gap_period_adv_addr_cfg [size]	pal_info	List of addresses to be added in the Periodic Advertiser List (see Table 60) (Present only if operation = GAPM_SET_PAL)
struct gap_ral_dev_info [size]	ral_info	List of addresses to be added in the Resolving List (see Table 23) (Present only if operation = GAPM_SET_RAL)

Response:

GAPM_CMP_EVT: When operation has been completed.

Description:

Request to set the content of either the White List or the Periodic Advertiser List or the Resolving List. The current content of the indicated list will be cleared and replaced by the indicated content.

If number of addresses to be added in the list is greater than list size, a GAP_ERR_INSUFF_RESOURCES status is returned in the GAPM_CMP_EVT message.

A device can be present only once in the list. If not the case a GAP_ERR_INVALID_PARAM status is returned.

4.4.4 GAPM_GET_RAL_ADDR_CMD

Parameters:

Type	Parameters	Description
uint8_t	operation	GAPM Operation Code (see Table 25): ▪ **GAPM_GET_RAL_LOC_ADDR:** Get Local address ▪ **GAPM_GET_RAL_PEER_ADDR:** Get Peer address
gap_bdaddr	peer_identity	Peer Device Identity

Response:

GAPM_RAL_ADDR_IND: Return requested address.

GAPM_CMP_EVT: When operation has been completed.

Description:

Get local or peer resolvable private address.

4.4.5 GAPM_RAL_ADDR_IND

Parameters:

Type	Parameters	Description
uint8_t	operation	Peer or local read operation (see Table 25): • GAPM_GET_RAL_PEER_ADDR • GAPM_GET_RAL_LOC_ADDR
gap_bdaddr	addr	Latest used or seen resolvable private address

Description:

Event triggered when local or peer resolvable address is requested.

4.4.6 GAPM_LE_TEST_MODE_CTRL_CMD

Parameters:

Type	Parameters	Description
uint8_t	Operation	GAPM operation code (see Table 25): • **GAPM_LE_TEST_STOP** • **GAPM_LE_TEST_RX_START** • **GAPM_LE_TEST_TX_START**
uint8_t	channel	Tx or Rx Channel (Range 0x00 to 0x27)
uint8_t	tx_data_length	Length in bytes of payload data in each packet (only valid for TX mode, range 0x00-0xFF)
uint8_t	tx_pkt_payload	Packet Payload type (only valid for TX mode see Table 13)
uint8_t	phy	PHY rate (see Table 11)
uint8_t	modulation_idx	Modulation Index (only valid for RX mode see Table 12)
uint8_t	cte_len	CTE length (in 8us unit) (Expected for RX Mode) – 0 to disable content tone extension
uint8_t	cte_type	CTE type (0: AOA | 1: AOD-1us | 2: AOD-2us) (Expected for TX Mode)
uint8_t	slot_dur	Slot durations (only valid for RX mode)
uint8_t	switching_pattern_len	Length of switching pattern (number of antenna IDs in the pattern)
uint8_t [switching_pattern_len]	antenna_id	Array of antenna IDs

Response:

GAPM_CMP_EVT: Once the operation is completed.

GAPM_LE_TEST_END_IND: When stopping test mode and if number of RX packet greater than zero

Description:

Control direct test mode:

- Enable RX Test Mode
- Enable TX Test Mode
- Disable Test Mode

4.4.7 GAPM_LE_TEST_END_IND

Parameters:

Type	Parameters	Description
uint16_t	nb_packet_received	Number of received packets

Description:

Indicate end of test mode event if number of received packets greater than zero.

4.4.8 GAPM_LE_TEST_IQ_REPORT_IND

Parameters:

Type	Parameters	Description
uint8_t	channel_idx	Data channel index
int16_t	rssi	RSSI (in 0.1 dBm)
uint8_t	rssi_antenna_id	RSSI antenna ID
uint8_t	cte_type	CTE type (0: AOA | 1: AOD-1us | 2: AOD-2us) (see Table 14)
uint8_t	slot_dur	Slot durations (1: 1us | 2: 2us)
uint8_t	pkt_status	Packet status
uint16_t	pa_evt_cnt	Periodic Adv Event Counter
uint8_t	nb_samples	Number of samples
struct gap_iq_sample [nb_samples]	sample	Array of I/Q sample (see Table 24)

Response:

N/A

Description:

Indicate reception of I/Q Report event over a LE RX Test mode activity.

4.5 Local Device Information

General Access Profile Manager API messages used to retrieve information about local device.

4.5.1 GAPM_GET_DEV_INFO_CMD

Parameters:

Type	Parameters	Description
uint8_t	operation	GAPM Operation Code (see Table 25): • **GAPM_GET_DEV_VERSION**: Get Local device version • **GAPM_GET_DEV_BDADDR**: Get Local device BD Address • **GAPM_GET_DEV_ADV_TX_POWER**: Get device advertising power level • **GAPM_DBG_GET_MEM_INFO**: Get memory usage (debug only) • **GAPM_GET_SUGGESTED_DFLT_LE_DATA_LEN:** Get Suggested Default LE Data Length • **GAPM_GET_MAX_LE_DATA_LEN:** Get Maximum LE Data Length • **GAPM_GET_WLIST_SIZE:** Get White List size • **GAPM_GET_PAL_SIZE:** Get Periodic Advertising List size • **GAPM_GET_RAL_SIZE:** Get Resolving Address List size • **GAPM_GET_NB_ADV_SETS**: Read number of advertising sets currently supported by the controller • **GAPM_GET_MAX_LE_ADV_DATA_LEN**: Get maximum data length for advertising data • **GAPM_GET_ANTENNA_INFO**: Retrieve Antenna information • **GAPM_GET_DEV_TX_PWR:** Get minimum and maximum transmit power values supported by the controller • **GAPM_GET_DEV_RF_PATH_COMP:** Get the RF Path Compensation values used in the TX Power Level and RSSI calculation

Response:

GAPM_DEV_VERSION_IND: If local device version is requested

GAPM_DEV_BDADDR_IND: if local device public BD Address is requested.

GAPM_DEV_ADV_TX_POWER_IND: If advertising TX power level is requested

GAPM_DBG_MEM_INFO_IND: if memory information are requested (DEBUG ONLY)

GAPM_SUGG_DFLT_DATA_LEN_IND: if suggested Default Data Length is requested

GAPM_MAX_DATA_LEN_IND: if Maximum Data Length is requested

GAPM_NB_ADV_SETS_IND: if number of advertising sets is requested

GAPM_LIST_SIZE_IND: if size of White/Periodic Advertising/Resolving Address List is requested

GAPM_MAX_ADV_DATA_LEN_IND: if maximum advertising data length is requested.

GAPM_ANTENNA_INF_IND: if antenna information requested

GAPM_DEV_RF_PATH_COMP_IND: if RF Path Compensation values are requested

GAPM_DEV_TX_PWR_IND: if transmit power values are requested

GAPM_CMP_EVT: When operation completed.

Description:

Get information about local device such as:

- Local Device Name
- Local Device Version
- Local Device Public BD Address
- Data Length Extension parameters
- Antenna information, …

4.5.2 GAPM_DEV_VERSION_IND

Parameters:

Type	Parameters	Description
uint8_t	hci_ver	HCI version
uint8_t	lmp_ver	LMP version
uint8_t	host_ver	Host version
uint16_t	hci_subver	HCI revision
uint16_t	lmp_subver	LMP subversion
uint16_t	host_subver	Host revision
uint16_t	manuf_name	Manufacturer name

Description:

Event containing Local Device Version

4.5.3 GAPM_DEV_BDADDR_IND

Parameters:

Type	Parameters	Description
gap_bdaddr	addr	Local device address information

Description:

This is the event that contains the Local Device BD Address. This event can be triggered when reading local BD Address, but also when starting an air operation (advertising, connecting, scanning) in order to inform application about the used random address.

This event is also triggered when generating a random address using security toolbox (see GAPM_GEN_RAND_ADDR_CMD)

4.5.4 GAPM_DEV_ADV_TX_POWER_IND

Parameters:

Type	Parameters	Description
uint8_t	power_lvl	Advertising channel TX power level

Description:

Event triggered when application request Advertising TX Power level.

4.5.5 GAPM_DBG_MEM_INFO_IND (DEBUG ONLY)

Parameters:

Type	Parameters	Description
uint32_t	max_mem_used	peak of memory usage measured
uint16_t[KE_MEM_BLOCK_MAX]	mem_used	Memory size currently used into each heaps.

Description:

Event triggered when application requests currently used memory (heap).

4.5.6 GAPM_SUGG_DFLT_DATA_LEN_IND

Parameters:

Type	Parameters	Description
uint16_t	suggted_max_tx_octets	Host's suggested value for the Controller's maximum transmitted number of payload octets
uint16_t	suggted_max_tx_time	Host's suggested value for the Controller's maximum packet transmission time

Description:

Event triggered when application requests suggested data length values.

4.5.7 GAPM_MAX_DATA_LEN_IND

Parameters:

Type	Parameters	Description
uint16_t	suppted_max_tx_octets	Maximum number of payload octets that the local Controller supports for transmission
uint16_t	suppted_max_tx_time	Maximum time, in microseconds, that the local Controller supports for transmission
uint16_t	suppted_max_rx_octets	Maximum number of payload octets that the local Controller supports for reception
uint16_t	suppted_max_rx_time	Maximum time, in microseconds, that the local Controller supports for reception

Description:

Event triggered when application requests the Maximum Data Length supported by Controller

4.5.8 GAPM_LIST_SIZE_IND

Parameters:

Type	Parameters	Description
uint8_t	operation	Remind operation code that triggered a read list size procedure. It indicates if the indicated size is the size of the white list, the resolving list or the periodic advertiser list.
uint8_t	size	Size of list

Response:

N/A

Description:

Inform the application about size of a list.

4.5.9 GAPM_ANTENNA_INF_IND

Parameters:

Type	Parameters	Description
uint8_t	supp_switching_sampl_rates	Supported switching sampling rates bit field (see Table 49)
uint8_t	antennae_num	Number of antennae
uint8_t	max_switching_pattern_len	Max length of switching pattern (number of antenna IDs in the pattern)
uint8_t	max_cte_len	Max CTE length

Response:

N/A

Description:

Indication triggered to provide controller antenna information.

4.6 Security Manager Toolbox

The General Access Profile Manager provides a security manager toolbox message API in order to perform some security operations. Those operations are not related to an active link. It could be used to:

- Resolve some resolvable random address.
- Generate keys.
- Generate random BD Addresses (Static or Non Resolvable).

Note: SM does not provide an API for application, so security features shall be accessed through GAP API.

4.6.1 GAPM_RESOLV_ADDR_CMD

Parameters:

Type	Parameters	Description
uint8_t	operation	GAPM Operation Code (see Table 25): • **GAPM_RESOLV_ADDR**: Resolve device address
uint8_t	nb_key	Number of provided IRK (shall be > 0)
bd_addr	addr	Resolvable random address to solve
gap_sec_key[nb_key]	irk[]	Array of IRK used for address resolution (LSB->MSB)

Response:

GAPM_ADDR_SOLVED_IND: triggered if address correctly resolved.

GAPM_CMP_EVT: When operation completed.

Description:

Resolve provided random address using array of Identity Resolution Key (IRK) exchanged and bonded with devices during pairing operations (See GAPC Pairing).

Operation will complete successfully if address has been correctly resolved and GAPM_ADDR_SOLVED_IND message will be triggered to inform which key has been used to perform resolution.

Else operation complete with **GAP_ERR_NOT_FOUND** error status code.

4.6.2 GAPM_ADDR_SOLVED_IND

Parameters:

Type	Parameters	Description
uint8_t	idx	IRK index in provided irk array (see GAPM_RESOLV_ADDR_CMD)
gap_sec_key	irk	IRK that correctly solved the random address

Description:

Triggered if provided BD address has been successfully resolved. It indicates which key has been used to resolve the address and index of the key in the provided array of keys.

4.6.3 GAPM_GEN_RAND_ADDR_CMD

Parameters:

Type	Parameters	Description
uint8_t	operation	GAPM Operation Code (see Table 25): • **GAPM_GEN_RAND_ADDR**: Generate a random address
uint8_t	rnd_type	Random address type (see)

Response:

GAPM_DEV_BDADDR_IND: triggered when address generated.

GAPM_CMP_EVT: When operation completed.

Description:

Generate a random device address without starting any air operation. This can be useful for privacy in order to generate the reconnection address on demand.

4.6.4 GAPM_GEN_RAND_NB_CMD

Parameters:

Type	Parameters	Description
uint8_t	operation	GAPM Operation Code (see Table 25): • **GAPM_GEN_RAND_NB**: Generate a random number

Response:

GAPM_GEN_RAND_NB_IND: triggered when random number is generated.

GAPM_CMP_EVT: When operation completed.

Description:

Security toolbox message used to generate an 8-byte random number. This can be useful to generate LTK random number before distributing it.

4.6.5 GAPM_GEN_RAND_NB_IND

Parameters:

Type	Parameters	Description
struct rand_nb	randnb	Generated Random Number (8 bytes) (see Table 18)

Description:

Event triggered when a random number is generated by security toolbox.

4.6.6 GAPM_USE_ENC_BLOCK_CMD

Parameters:

Type	Parameters	Description
uint8_t	operation	GAPM Operation Code (see Table 25): • **GAPM_USE_ENC_BLOCK**: Use Encryption Block
uint8_t[16]	operand_1	128 bits operand 1 (key)
uint8_t[16]	operand_2	128 bits operand 2 (data)

Response:

GAPM_USE_ENC_BLOCK_IND: triggered when AES-128 bits block calculation has been performed

GAPM_CMP_EVT: When operation completed.

Description:

Security toolbox message used to perform an AES-128 calculation operation. This can be used to generate encryption keys (See SMP part of Bluetooth Core spec document related to Key generation [1]).

4.6.7 GAPM_USE_ENC_BLOCK_IND

Parameters:

Type	Parameters	Description
uint8_t[16]	result	128 bits AES encryption result

Description:

Event triggered when AES-128 encryption calculation has been performed.

4.6.8 GAPM_SET_IRK_CMD

Parameters:

Type	Parameters	Description
uint8_t	operation	GAPM Operation Code (see Table 25): • **GAPM_SET_IRK:** Set new IRK
gap_sec_key	rk	New IRK to be set

Response:

GAPM_CMP_EVT: When operation completed.

Description:

Command to change the current IRK for a renewed one, it can be used every time no air operation is being performed.

4.7 Air Operations

General Access Profile Manager provides an activity mechanism to start several non-connected procedures in parallel.

Four kinds of activities are available; all are described more precisely in [2]:

- Advertising activity
- Scanning activity
- Initiating activity
- Periodic synchronization activity.

Information about Air operation:

Air Operations have common API used to configure the BD address that will be used during the operation.

Information about address source:

- If a **generated random address** is used for air operation, a GAPM_DEV_BDADDR_IND message will be triggered to indicate current BD address.
- If a **generated random** address is used during air operation, a timer will be started in order to generate and address each ***renew_dur*** periods (see GAPM_SET_DEV_CONFIG_CMD).
- **Non Resolvable Address** can be used only for non-connected activity such as scanning or non-connected advertising

	Broadcast	Observer	Central	Peripheral
Privacy Off	Public or Static	Public or Static	Public or Static	Public or Static
Privacy On - Connectable	N/A	N/A	Resolvable	Resolvable
Privacy On - Non Connectable	Public / Resolvable / Non-Resolvable	Resolvable or Non-Resolvable	Resolvable or Non-Resolvable	Resolvable or Non-Resolvable

Table 31: Device address type according to privacy configuration

4.7.1 Enumerations

❖ **gapm_own_addr**

Value	Flag	Description
0x00	GAPM_STATIC_ADDR	Use device identity (set using GAPM_SET_DEV_CONFIG_CMD message)
0x01	GAPM_GEN_RSLV_ADDR	Use a resolvable private random address
0x02	GAPM_GEN_NON_RSLV_ADDR	Use a non-resolvable private random address
0x02-0xFF	N/A	Reserved for future use

Table 32: Own Address Types

❖ **gapm_adv_disc_mode**

Value	Flag	Description
0x00	GAPM_ADV_MODE_NON_DISC	Non discoverable
0x01	GAPM_ADV_MODE_GEN_DISC	General discoverable
0x02	GAPM_ADV_MODE_LIM_DISC	Limited discoverable
0x03	GAPM_ADV_MODE_BEACON	Broadcast mode without presence of AD_TYPE_FLAG in advertising data
0x03-0xFF	N/A	Reserved for future use

Table 33: Advertising Discovery Modes

❖ **gapm_adv_prop**

Note: First 6 bits are mapped on "Advertising Event Properties" value of HCI's LE_SET_EXTENDED_ADVERTISING_PARAMETERS command. Bit 4 is reserved from application point of view as it will be used to indicate to the controller if advertising is a legacy advertising or not.

Bits number 8 and 9 are mapped on "Advertising Filter Policy" value of HCI's LE_SET_EXTENDED_ADVERTISING_PARAMETERS command.

Bit	Flag	Description
0	GAPM_ADV_PROP_CONNECTABLE_BIT	Indicate that advertising is connectable, reception of CONNECT_REQ or AUX_CONNECT_REQ PDUs is accepted. Not applicable for periodic advertising.
1	GAPM_ADV_PROP_SCANNABLE_BIT	Indicate that advertising is scannable, reception of SCAN_REQ or AUX_SCAN_REQ PDUs is accepted. Only apply in following cases: • Legacy Advertising: Non connectable • Extended Advertising: Non connectable and not anonymous
2	GAPM_ADV_PROP_DIRECTED_BIT	Indicate that advertising targets a specific device Only apply in following cases: • Legacy Advertising: Connectable • Extended Advertising: Connectable or Non Connectable and Non discoverable
3	GAPM_ADV_PROP_HDC_BIT	Indicate that High Duty Cycle has to be used for advertising on primary channel. Apply only if directed legacy advertising is used
4	N/A	Reserved
5	GAPM_ADV_PROP_ANONYMOUS_BIT	Enable Anonymous mode. Device address won't appear in sent PDUs. Valid only if created advertising is an extended advertising.
6	GAPM_ADV_PROP_TX_PWR_BIT	Include TX Power in the extended header of the advertising PDU. Valid only if created advertising is not a legacy advertising.
7	GAPM_ADV_PROP_PER_TX_PWR_BIT	Include TX Power in the periodic advertising PDU. Valid only if created advertising is a periodic advertising.

8	GAPM_ADV_PROP_SCAN_REQ_NTF_EN_BIT	Indicate if application must be informed about received SCAN_REQ PDUs
9-15	N/A	Reserved for future use

Table 34: Advertising Properties Bit Field Values

❖ gapm_adv_type

Value	Flag	Description
0x00	GAPM_ADV_TYPE_LEGACY	Legacy Advertising
0x01	GAPM_ADV_TYPE_EXTENDED	Extended Advertising
0x02	GAPM_ADV_TYPE_PERIODIC	Periodic Advertising
0x03-0xFF	N/A	Reserved for future use

Table 35: Advertising Types

❖ gapm_phy_type

Value	Flag	Description
0x00	N/A	Reserved
0x01	GAPM_PHY_LE_1M	LE 1M PHY
0x02	GAPM_PHY_LE_2M	LE 2M PHY
0x03	GAPM_PHY_LE_CODED	LE Coded PHY
0x04-0xFF	N/A	Reserved for future use

Table 36: PHY Types

❖ adv_filter_policy

Value	Flag	Description
0x00	ADV_ALLOW_SCAN_ANY_CON_ANY	Allow both scan and connection requests from anyone
0x01	ADV_ALLOW_SCAN_WLST_CON_ANY	Allow scan requests from device in white list only and connection requests from anyone
0x02	ADV_ALLOW_SCAN_ANY_CON_WLST	Allow scan requests from anyone and connection requests from device in the white list only
0x03	ADV_ALLOW_SCAN_WLST_CON_WLST	Allow both scan and connection requests from device in the white list only
0x04-0xFF	N/A	Reserved for future use

Table 37: Advertising filter policy

❖ gapm_scan_type

Value	Flag	Description
0x00	GAPM_SCAN_TYPE_GEN_DISC	Perform a scan with a limited duration. In this mode, device is able to discover devices broadcasting data in limited or general discoverable mode. White list cannot be used in this mode.
0x01	GAPM_SCAN_TYPE_LIM_DISC	Perform a scan with limited duration. In this mode, device is able to discover advertiser broadcasting data in limited discoverable mode. White list cannot be used in this mode.

0x02	GAPM_SCAN_TYPE_OBSERVER	Observer: All received advertising packets are accepted except directed advertising packets which do not target us. In case where device's address is a resolvable private address, directed advertising packets with a non-resolved target address can be accepted by setting GAPM_SCAN_PROP_ACCEPT_RPA_BIT bit in scan properties. It is then up to the application to resolve the target address.
0x03	GAPM_SCAN_TYPE_SELECT_OBSERVER	Selective Observer: Only accept received advertising packets whose initiator address in present in the white list. In case where device's address is a resolvable private address, directed advertising packets with a non-resolved target address can be accepted by setting GAPM_SCAN_PROP_ACCEPT_RPA_BIT bit in scan properties. It is then up to the application to resolve the target address.
0x04	GAPM_SCAN_TYPE_GEN_CONN_DISC	Perform a scan and accept only advertising packets sent by connectable devices. In case where device's address is a resolvable private address, directed advertising packets with a non-resolved target address can be accepted by setting GAPM_SCAN_PROP_ACCEPT_RPA_BIT bit in scan properties. It is then up to the application to resolve the target address.
0x05	GAPM_SCAN_TYPE_SELECT_CONN_DISC	Perform a scan and accept only advertising packets sent by connectable devices whose address is in the white list. In case where device's address is a resolvable private address, directed advertising packets with a non-resolved target address can be accepted by setting GAPM_SCAN_PROP_ACCEPT_RPA_BIT bit in scan properties. It is then up to the application to resolve the target address.
0x06-0xFF	N/A	Reserved for future use

Table 38: Scanning Types

❖ gapm_scan_prop

Bit	Flag	Description
0	GAPM_SCAN_PROP_PHY_1M_BIT	Scan advertisement on the LE 1M PHY
1	GAPM_SCAN_PROP_PHY_CODED_BIT	Scan advertisement on the LE Coded PHY
2	GAPM_SCAN_PROP_ACTIVE_1M_BIT	Active scan on LE 1M PHY (Scan Request PDUs may be sent)
3	GAPM_SCAN_PROP_ACTIVE_CODED_BIT	Active scan on LE Coded PHY (Scan Request PDUs may be sent)
4	GAPM_SCAN_PROP_ACCEPT_RPA_BIT	Accept directed advertising packets if we use a resolvable private address and target address cannot be solved by the controller. Of course if target address can be resolved and is not our address, the packet is dropped.
5	GAPM_SCAN_PROP_FILT_TRUNC_BIT	Filter truncated advertising or scan response reports.
6-7	N/A	Reserved for future use

Table 39: Scanning Properties Bit Field Values

❖ gapm_dup_filter_pol

Value	Flag	Description
0x00	GAPM_DUP_FILT_DIS	Disable filtering of duplicate packets
0x01	GAPM_DUP_FILT_EN	Enable filtering of duplicate packets
0x02	GAPM_DUP_FILT_EN_PERIOD	Enable filtering of duplicate packets, reset for each scan period
0x03-0xFF	N/A	Reserved for future use

Table 40: Duplicate filter policy

❖ gapm_init_type

Value	Flag	Description
0x00	GAPM_INIT_TYPE_DIRECT_CONN_EST	Direct connection establishment: Establish a connection with an indicated device.
0x01	GAPM_INIT_TYPE_AUTO_CONN_EST	Automatic connection establishment: Establish a connection with all devices whose address in present in the white list.
0x02	GAPM_INIT_TYPE_NAME_DISC	Name discovery: Establish a connection with an indicated device in order to read content of its Device Name characteristic. Connection is closed once this operation is stopped.
0x03-0xFF	N/A	Reserved for future use

Table 41: Initiating Types

❖ gapm_init_prop

Bit	Flag	Description
0	GAPM_INIT_PROP_1M_BIT	Scan connectable advertisements on the LE 1M PHY. Connection parameters for the LE 1M PHY are provided
1	GAPM_INIT_PROP_2M_BIT	Connection parameters for the LE 2M PHY are provided
2	GAPM_INIT_PROP_CODED_BIT	Scan connectable advertisements on the LE LE Coded PHY. Connection parameters for the LE Coded PHY are provided
3-7	N/A	Reserved for future use

Table 42: Initiating Properties Bit Field Values

❖ gapm_per_sync_type

Value	Flag	Description
0x00	GAPM_PER_SYNC_TYPE_GENERAL	Do not use periodic advertiser list for synchronization. Use advertiser information provided in the GAPM_ACTIVITY_START_CMD
0x01	GAPM_PER_SYNC_TYPE_SELECTIVE	Use periodic advertiser list for synchronization
0x02	GAPM_PER_SYNC_TYPE_PAST	Use Periodic advertising sync transfer information send through connection for synchronization
0x03-0xFF	N/A	Reserved for future use

Table 43: Periodic synchronization types

❖ gapm_actv_type

Value	Flag	Description
0x00	GAPM_ACTV_TYPE_ADV	Advertising Type
0x01	GAPM_ACTV_TYPE_SCAN	Scanning Type
0x02	GAPM_ACTV_TYPE_INIT	Initiating Type
0x03	GAPM_ACTV_TYPE_PERIOD_ADV	Periodic Synchronization Type
0x04-0xFF	N/A	Reserved for future use

Table 44: Activity Types

❖ gapm_clk_acc

Value	Flag	Description
0x00	GAPM_CLK_ACC_500	500 ppm
0x01	GAPM_CLK_ACC_250	250 ppm
0x02	GAPM_CLK_ACC_150	150 ppm
0x03	GAPM_CLK_ACC_100	100 ppm
0x04	GAPM_CLK_ACC_75	75 ppm
0x05	GAPM_CLK_ACC_50	50 ppm
0x06	GAPM_CLK_ACC_30	30 ppm
0x07	GAP_CLK_ACC_20	20 ppm
0x08-0xFF	N/A	Reserved for future use

Table 45: Clock Accuracy

❖ gapm_adv_report_info

Bit	Flag	Description
0-2	GAPM_REPORT_INFO_REPORT_TYPE_MASK	Report Type
3	GAPM_REPORT_INFO_COMPLETE_BIT	Indicate that report is complete.
4	GAPM_REPORT_INFO_CONN_ADV_BIT	Connectable Advertising
5	GAPM_REPORT_INFO_SCAN_ADV_BIT	Scannable Advertising
6	GAPM_REPORT_INFO_DIR_ADV_BIT	Directed Advertising
7	N/A	Reserved for future use

Table 46: Report Information Bit field

❖ gapm_adv_report_type

Value	Flag	Description
0x00	GAP_REPORT_TYPE_ADV_EXT	Extended Advertising Report
0x01	GAP_REPORT_TYPE_ADV_LEG	Legacy Advertising Report

0x02	GAP_REPORT_TYPE_SCAN_RSP_EXT	Extended Scan Request
0x03	GAP_REPORT_TYPE_SCAN_RSP_LEG	Legacy Scan Response
0x04	GAP_REPORT_TYPE_PER_ADV	Periodic Advertising Report
0x05-0xFF	N/A	Reserved for future use

Table 47: Report Types

❖ gapm_sync_cte_type

Bit	Flag	Description
0	GAPM_CTE_NO_SYNC_WITH_AOA	Do not sync to packets with an AoA Constant Tone Extension
1	GAPM_CTE_NO_SYNC_WITH_AOD_1US_SLOT	Do not sync to packets with an AoD Constant Tone Extension with 1 us slots
2	GAPM_CTE_NO_SYNC_WITH_AOD_2US_SLOT	Do not sync to packets with an AoD Constant Tone Extension with 2 us slots
3	GAPM_CTE_NO_SYNC_WITH_TYPE_3	Do not sync to packets with a type 3 Constant Tone Extension (currently reserved for future use)
4	GAPM_CTE_NO_SYNC_WITHOUT_CTE	Do not sync to packets without a Constant Tone Extension
5-7	N/A	Reserved for future use

Table 48: Constant Tone Extension sync filtering type (bit field)

❖ gapm_switch_sampling_rate

Bit	Flag	Description
0	GAPM_AOD_TX_1_US	1 us switching supported for AoD transmission
1	GAPM_AOD_RX_1_US	1 us sampling supported for AoD reception
2	GAPM_AOA_RX_1_US	1 us switching and sampling supported for AoA reception
3-7	N/A	Reserved for future use

Table 49: Supported AoA AoD switching sampling rate (bit field)

4.7.2 Structures

❖ gapm_adv_create_param

Type	Parameters	Description
uint8_t	type	Advertising type (see Table 35)
uint8_t	disc_mode	Discovery mode (see Table 33)
uint16_t	prop	Bit field value providing advertising properties (see Table 34)
int8_t	max_tx_pwr	Maximum power level at which the advertising packets have to be transmitted (between -127 and 126 dBm)
uint8_t	filter_pol	Advertising filter policy (see Table 37)
struct gap_bd_addr	peer_addr	Peer address configuration (used only in case of directed advertising) (see Table 19)
struct gapm_adv_prim_cfg	prim_cfg	Configuration for Primary Advertising (see Table 51)
struct gapm_adv_second_cfg	second_cfg	Configuration for Secondary Advertising (valid only if type = GAPM_ADV_TYPE_EXTENDED or type = GAPM_ADV_TYPE_PERIODIC) (see Table 52)
struct gapm_adv_period_cfg	period_cfg	Configuration for Periodic Advertising (valid only if advertising type is GAPM_ADV_TYPE_PERIODIC) (see Table 53)

Table 50: Advertising Parameters (Activity Creation)

❖ gapm_adv_prim_cfg

Type	Parameters	Description
uint32_t	adv_intv_min	Minimum advertising interval (in unit of 0.625ms). Minimum authorized value is 20ms.
uint32_t	adv_intv_max	Maximum advertising interval (in unit of 0.625ms). Minimum authorized value is 20ms.
uint8_t	chnl_map	Bit field indicating the channel mapping for primary advertising (see Table 8)
uint8_t	phy	Indicate on which PHY primary advertising has to be performed (see Table 36). Only LE 1M PHY is allowed for legacy advertising. LE 2M PHY not allowed.

Table 51: Configuration for advertising on primary channel

❖ gapm_adv_second_cfg

Type	Parameters	Description
uint8_t	max_skip	Maximum number of advertising events the Controller can skip before sending the AUX_ADV_IND packets. 0 means that AUX_ADV_IND PDUs shall be sent prior each advertising events.
uint8_t	phy	Indicate on which PHY secondary advertisement has to be performed (see Table 36)
uint8_t	adv_sid	Advertising SID

Table 52: Configuration for advertising on secondary channel

❖ gapm_adv_period_cfg

Type	Parameters	Description
uint16_t	adv_intv_min	Minimum advertising interval for periodic advertising (in unit of 1.25ms). Mimimum authorized value is 7.5ms
uint16_t	adv_intv_max	Maximum advertising interval for periodic advertising (in unit of 1.25ms). Mimimum authorized value is 7.5ms
bool	cte_enable	True to set CTE transmit parameters, False else.
uint8_t	cte_type	CTE type (0: AOA | 1: AOD-1us | 2: AOD-2us) (see Table 14)
uint8_t	cte_len	CTE length (in 8us unit)
uint8_t	cte_count	CTE count (number of CTEs to transmit in each periodic advertising interval, range 0x01 to 0x10)
uint8_t	switching_pattern_len	Length of switching pattern (number of antenna IDs in the pattern)
uint8_t[switching_pattern_len]	antenna_id	Array of antenna IDs

Table 53: Configuration for periodic advertising

❖ gapm_adv_param

Type	Parameters	Description
uint16_t	duration	Advertising duration (in unit of 10ms). 0 means that advertising continues until the host disables it.
uint8_t	max_adv_evt	Maximum number of extended advertising events the controller shall attempt to send prior to terminating the extended advertising (valid only if provided activity is an extended advertising activity).

Table 54: Additional Advertising Parameters

❖ gapm_scan_param

Type	Parameters	Description
uint8_t	type	Type of scanning to be started (see Table 38)
uint8_t	prop	Properties for the scan procedure (see Table 39)
uint8_t	dup_filt_pol	Duplicate Packet Filtering Policy (see Table 40)
uint8_t	rsvd	Reserved for future use
struct gapm_scan_wd_op_param	scan_param_1m	Scan window opening parameters for LE 1M PHY (valid only if scan on LE 1M PHY is indicated in the prop field) (see Table 57)
struct gapm_scan_wd_op_param	scan_param_coded	Scan window opening parameters for LE Coded PHY (valid only if scan on LE Coded PHY is indicated in the prop field) (see Table 57)
uint16_t	duration	Scan duration (in unit of 10ms). 0 means that the controller will scan continuously until reception of a stop command from the application.
uint16_t	period	Scan period, time interval between two consequent starts of a scan duration by the controller (in unit of 1.28s). 0 means that the scan procedure is not periodic.

Table 55: Scan Parameters

❖ gapm_init_param

Type	Parameters	Description
uint8_t	type	Initiating type (see Table 41)
uint8_t	prop	Properties for the initiating procedure to be started (see Table 42)
uint16_t	conn_to	Timeout for Automatic Connection Establishment (in unit of 10ms). Cancel the procedure if not all indicated devices have been connected when the timeout occurs. 0 means there is no timeout.
struct gap_scan_wd_op_param	scan_param_1m	Scan window opening parameters for LE 1M PHY (valid only if bit 0 is set in prop value) (see Table 57)
struct gap_scan_wd_op_param	scan_param_coded	Scan Parameters for LE Coded PHY (valid only if bit 1 is set in prop value) (see Table 57)
struct gap_conn_param	conn_param_1m	Connection Parameters for 1Mbps PHY (valid only if bit 0 is set in prop value) (see Table 58)
struct gap_conn_param	conn_param_2m	Connection Parameters for 2Mbps PHY (valid only if bit 1 is set in prop value) (see Table 58)
struct gap_conn_param	conn_param_le_coded	Connection Parameters for LE Coded PHY (valid only if bit 2 is set in prop value) (see Table 58)
struct gap_bd_addr	peer_addr	Address of peer device with which a connection has to be established (valid only if initiating type is 'Direct Connection Establishment' or 'Name Discovery') (see Table 19)

Table 56: Initiating Parameters

❖ gapm_scan_wd_op_param

Type	Parameters	Description
uint16_t	scan_intv	Scan interval
uint16_t	scan_wd	Scan window

Table 57: Scan Window Opening Parameters

❖ gapm_conn_param

Type	Parameters	Description
uint16_t	conn_intv_min	Minimum value for the connection interval (in unit of 1.25ms). Shall be less than or equal to conn_intv_max value. Allowed range is 7.5ms to 4s.
uint16_t	conn_intv_max	Maximum value for the connection interval (in unit of 1.25ms). Shall be greater than or equal to conn_intv_min value. Allowed range is 7.5ms to 4s.
uint16_t	conn_latency	Slave latency. Number of events than can be missed a connected slave device.
uint16_t	supervision_to	Link supervision timeout (in unit of 10ms). Allowed range is 100ms (10) to 32s (3200).
uint16_t	ce_len_min	Recommended minimum duration of connection events (in unit of 0.625ms)
uint16_t	ce_len_max	Recommended maximum duration of connection events (in unit of 0.625ms)

Table 58: Connection Parameters

❖ gapm_period_sync_param

Type	Parameters	Description
uint16_t	skip	The number of periodic advertising that can be skipped after a successful receive. Maximum authorized value is 499.
uint16_t	sync_to	Synchronization timeout for the periodic advertising (in unit of 10ms). Authorized values are in the range 100ms (10) – 163.84s (16384)
uint8_t	use_pal	True if Periodic Advertiser List has to be used to determine which advertiser to listen to, else Advertising SID and provided advertiser address information will be used
uint8_t	rsvd	Reserved for future use
struct gap_period_adv_addr_cfg	adv_addr	Address of advertiser with which synchronization has to be established. (see Table 60) (used only if use_pal is false)

Table 59: Periodic Synchronization Parameters

❖ gapm_period_adv_addr_cfg

Type	Parameters	Description
struct gap_bdaddr	addr	Advertiser Address Information (see Table 19)
uint8_t	adv_sid	Advertising SID

Table 60: Address Configuration for Periodic Advertiser

❖ gapm_per_sync_param

Type	Parameters	Description
uint16_t	skip	Number of periodic advertising that can be skipped after a successful receive. Maximum authorized value is 499
uint16_t	sync_to	Synchronization timeout for the periodic advertising (in unit of 10ms between 100ms and 163.84s)
uint8_t	type	Periodic synchronization type (see Table 43)
uint8_t	conidx	Connection index used for periodic sync info reception (only valid for GAPM_PER_SYNC_TYPE_PAST)
struct gapm_period_adv_addr_cfg	adv_addr	Address of advertiser with which synchronization has to be established (used only if use_pal is false)
uint8_t	report_disable	1 to disable periodic advertising report, 0 to enable them by default
uint8_t	cte_type	Type of Constant Tone Extension device should sync on (see Table 48).

Table 61: Periodic synchronization parameters

4.7.3 GAPM_ACTIVITY_CREATE_CMD

Parameters:

Type	Parameters	Description
uint8_t	operation	GAPM Operation Code (see Table 25): • **GAPM_CREATE_ADV_ACTIVITY**: Create advertising activity • **GAPM_CREATE_SCAN_ACTIVITY**: Create scan activity • **GAPM_CREATE_INIT_ACTIVITY**: Create initiating activity • **GAPM_CREATE_PERIOD_SYNC_ACTIVITY**: Create periodic synchronization activity
uint8_t	own_addr_type	Own address type (see Table 32).
struct gapm_adv_create_param	adv_param	Advertising parameters (Optional, present only if operation = **GAPM_CREATE_ADV_ACTIVITY)** (see Table 50)

Response:

GAPM_ACTIVITY_CREATED_IND: Once the requested activity has been successfully created.

GAPM_CMP_EVT: When operation has been completed.

Description:

Create an advertising, a scanning, an initiating or a periodic synchronization activity.

More information about the life cycle of an activity can be found in [2].

Several activities of the same type can be created but few rules apply when several activities are started together, more details can be found in 4.7.4).

The number of activities that can be created in parallel is limited. If the limit has been reached and a new activity cannot be created, a GAP_ERR_INSUFF_RESOURCES status will be returned in the GAPM_CMT_EVT message.

Coherence of provided advertising parameters is checked by GAPM, if an error is detected GAP_ERR_INVALID_PARAM status is returned.

4.7.4 GAPM_ACTIVITY_START_CMD

Parameters:

Type	Parameters	Description
uint8_t	operation	GAPM Operation Code (see Table 25): • **GAPM_START_ACTIVITY**: Start a given activity
uint8_t	actv_idx	Activity Identifier
union	u_param	
struct gapm_adv_param	adv_add_param	Additional advertising parameters (Only if indicated activity is an advertising activity) (see Table 54)
struct gapm_scan_param	scan_param	Scan Parameters (Only if indicated activity is a scanning activity) (see Table 55)
struct gapm_init_param	init_param	Initiating parameters (Only if requested operation is an initiating activity) (see Table 56)
struct gapm_per_sync_param	period_sync_param	Periodic Synchronization Parameters (Only if indicated activity is a periodic synchronization activity) (see Table 59)

Response:

GAPM_PEER_NAME_IND: If initiating activity with 'Name Discovery mode' is started and Device Name characteristic value has been successfully read

GAPM_CMP_EVT: When operation has well been started or if an error has been detected

Description:

Request the host to start a previously created activity.

Several advertising activities can be started in parallel. However it is not possible to start several scanning or several initiating activities as controller only supports one scanning and one initiating procedure to be run in parallel. It is then application responsibility to decide which scanning/initiating activity can be started.

If this rule is not respected, GAPM_CMP_EVT message will be returned with a GAP_ERR_COMMAND_DISALLOWED status.

Note that a periodic synchronization activity must be started in parallel with a scanning activity.

In case where periodic synchronization is started with use the Periodic Advertiser List enabled and several devices are present in this list, the application has to create and start a new periodic synchronization activity after each reception of a GAPM_SYNC_ESTABLISHED_IND message if not all not synchronized devices are present in the list.

4.7.5 GAPM_ACTIVITY_STOP_CMD

Parameters:

Type	Parameters	Description
uint8_t	operation	GAPM Operation Code (see Table 25): • **GAPM_STOP_ACTIVITY**: Stop a given activity • **GAPM_STOP_ALL_ACTIVITIES**: Stop all existing activities
uint8_t	actv_idx	Activity Identifier (used only if operation is GAPM_STOP_ACTIVITY)

Response:

GAPM_ACTIVITY_STOPPED_IND: Once the requested activity has been successfully stopped.

GAPM_CMP_EVT: When operation has been completed.

Description:

Request the host to stop a started activity identified by its activity identifier.

If the requested activity does not exist, GAPM_CMP_EVT message is returned with a GAP_ERR_INVALID_PARAM status. If the activity exists but was not started, error GAP_ERR_COMMAND_DISALLOWED is and no GAPM_ACTIVITY_STOPPED_IND message is sent.

4.7.6 GAPM_ACTIVITY_DELETE_CMD

Parameters:

Type	Parameters	Description
uint8_t	operation	GAPM Operation Code (see Table 25): • **GAPM_DELETE_ACTIVITY**: Delete only one activity • **GAPM_DELETE_ALL_ACTIVITIES**: Delete all existing activities
uint8_t	actv_idx	Activity Identifier (used only if operation is GAPM_DELETE_ACTIVITY)

Response:

GAPM_CMP_EVT: When operation has been completed.

Description:

Request the host to delete either an activity identified by its activity identifier or all currently existing activities.

If selected activity is not stopped (GAPM_DELETE_ACTIVITY operation) or if at least one activity is still running (GAPM_DELETE_ALL_ACTIVITIES), a GAP_ERR_COMMAND_DISALLOWED status will be returned in the GAPM_CMP_EVT message.

4.7.7 GAPM_ACTIVITY_CREATED_IND

Parameters:

Type	Parameters	Description
uint8_t	actv_idx	Activity Identifier
uint8_t	actv_type	Remind the kind of activity that has been stopped (see Table 44)
int8_t	tx_pwr	Selected TX Power for advertising activity (in dBm)

Response:

N/A

Description:

Inform the application about successful creation of an activity previously requested using GAPM_ACTIVITY_CREATE_CMD message.

Activity identifier value (actv_idx) must be stored by application and provided in any command message implying the newly created activity:

- GAPM_ACTIVITY_START_CMD
- GAPM_ACTIVITY_STOP_CMD
- GAPM_ACTIVITY_DELETE_CMD (if only one activity has to be stopped)
- GAPM_SET_ADV_DATA_CMD (if created activity is an advertising activity)

4.7.8 GAPM_ACTIVITY_STOPPED_IND

Parameters:

Type	Parameters	Description
uint8_t	actv_idx	Activity Identifier
uint8_t	actv_type	Remind the kind of activity that has been stopped (see Table 44)
uint8_t	reason	Stop reason
uint8_t	per_adv_stop	In case of periodic advertising, indicate if periodic advertising has been stopped.

Response:

N/A

Description:

Inform the application that running activity has been stopped either directly upon GAPM decision or after reception of a GAPM_ACTIVITY_STOP_CMD message.

An advertising activity or a scanning activity is stopped by GAPM in case of a timeout. Note that in case of a periodic advertising,

An initiating activity is stopped by GAPM after establishment of a connection if 'Direct Connection Establishment' mode is selected, once all connections have been established or timeout occurs if 'Automatic Connection Establishment' mode is selected, once the device name has been successfully retrieved if 'Name Discovery' mode is selected.

4.7.9 GAPM_SET_ADV_DATA_CMD

Parameters:

Type	Parameters	Description
uint8_t	operation	GAPM Operation Code (see Table 25): ▪ **GAPM_SET_ADV_DATA**: Set Advertising Data ▪ **GAPM_SET_SCAN_RSP_DATA**: Set Scan Response Data ▪ **GAPM_SET_PERIOD_ADV_DATA**: Set Periodic Advertising Data
uint8_t	actv_idx	Activity Identifier
uint16_t	length	Length of data
uint8_t [length]	data	Data

Response:

GAPM_CMP_EVT: When operation completed.

Description:

Set either the advertising data or the scan response data or the periodic advertising data for a given previously created advertising activity identified by its activity identifier.

If the provided identifier appears not to identify an existing advertising activity, GAPM_CMP_EVT message will be returned with a GAP_ERR_INVALID_PARAM status. This error status will also been returned in following cases:

- Data type value is unknown
- Data type is not supported by the activity (basically if periodic advertising data is provided for a non-periodic advertising activity or if scan response data is provided for a non-scannable advertising activity)
- Provided data length is invalid (more details in description below)

This command can be used even if the indicated activity has already been started. In that case application has to consider that length of the data to be set cannot exceed size of an air fragment.

Note if advertising data is provided, the AD Type flag must not be part of the data as its generation is under GAPM responsibility.

GAPM is in charge of checking the remaining available space in controller memory before trying to download the provided data. If it appears that not enough memory is available, GAPM_CMP_EVT message will be returned with a GAP_ERR_INSUFF_RESOURCES status.

In order to avoid such situation the application may use the GAPM_GET_DEV_INFO_CMD command with GAPM_GET_ADV_DATA_LENGTH operation code in order to retrieve the remaining length of available memory in controller memory.

Finally note that advertising data has to be set at least once before starting a newly created activity for the first time.

4.7.10 GAPM_EXT_ADV_REPORT_IND

Parameters:

Type	Parameters	Description
uint8_t	actv_idx	Scan activity Identifier
uint8_t	info	Bit field providing information about the received report: type, …(see Table 46)
struct gap_bdaddr	trans_addr	Address information about transmitter device (see Table 19) Not relevant for periodic advertising reports
struct gap_bdaddr	target_addr	Target address used for directed advertising report (see Table 19) Not relevant for periodic advertising reports
int8_t	tx_pwr	TX Power (between -127 and 127 dBm)
int8_t	rssi	RSSI (between -127 and +20 dBm)
uint8_t	phy_prim	Primary PHY on which report has been received (see Table 36). Not relevant for periodic advertising reports
uint8_t	phy_second	Secondary PHY on which report has been received (see Table 36). Not relevant for periodic advertising reports
uint8_t	adv_sid	Advertising SID. Valid only for Extended Advertising reports
uint16_t	period_adv_intv	Periodic Advertising Interval (in unit of 1.25ms) Minimum authorized value is 7.5ms. 0 means that no periodic advertising is indicated. Valid only for Extended Advertising reports.
uint16_t	length	Report length.
uint8_t	data[]	Data buffer containing the received buffer

Response:

N/A

Description:

Inform application about reception of either an advertising (legacy, extended or periodic) or a scan response PDU.

4.7.11 GAPM_SCAN_REQ_IND

Parameters:

Type	Parameters	Description
uint8_t	actv_idx	Activity Identifier
struct gap_bdaddr	trans_addr	Address information about transmitter device (see Table 19)

Response:

N/A

Description:

Inform application about reception of a scan request PDU for a scannable advertising activity.

Notification of received scan requests can be enabled/disabled in the prop field of the GAPM_CREATE_ACTIVITY_CMD (advertising activity type).

4.7.12 GAPM_SYNC_ESTABLISHED_IND

Parameters:

Type	Parameters	Description
uint8_t	actv_idx	Activity Identifier
uint8_t	phy	PHY on which synchronization has been established (see Table 36)
uint16_t	intv	Periodic Advertising Interval (in unit of 1.25ms)
uint8_t	adv_sid	Advertising SID
uint8_t	clk_acc	Advertiser Clock Accuracy (see Table 45)
struct gap_bdaddr	addr	Advertiser Address (see Table 19)
uint16_t	serv_data	Only valid for a periodic sync transfer sync, else ignore

Response:

N/A

Description:

Inform the application that the controller has successfully synchronized with a periodic advertising.

If synchronization is lost, GAPM_ACTIVITY_STOPPED_IND message will be sent to the application.

4.7.13 GAPM_PEER_NAME_IND

Parameters:

Type	Parameters	Description
bd_addr_t	addr	Peer identity address
uint8_t	addr_type	Peer identity address type
uint8_t	name_len	Peer device name length
uint8_t[name_len]	name	Peer device name

Response:

N/A

Description:

This message is sent once the name of a peer device has been retrieved using an initiating activity started with a name discovery initiating type. It contains the read device name and the device identity.

It is followed by a GAPM_ACTIVITY_STOPPED_IND message indicating that the initiating activity has been stopped.

4.7.14 GAPM_PER_ADV_REPORT_CTRL_CMD

Parameters:

Type	Parameters	Description
uint8_t	operation	GAPM Operation Code (see Table 25): • **GAPM_PER_ADV_REPORT_CTRL**: Enable / Disable reception of periodic advertising report
uint8_t	actv_idx	Activity Identifier
uint8_t	enable	True to enable reception of periodic advertising report, false to disable

Response:

GAPM_CMP_EVT: When operation has been completed.

Description:

Control reception of Periodic Advertising Report in a Periodic Advertising Sync activity.

4.7.15 GAPM_PER_SYNC_IQ_SAMPLING_CTRL_CMD

Parameters:

Type	Parameters	Description
uint8_t	operation	GAPM Operation Code (see Table 25): • **GAPM_PER_SYNC_IQ_SAMPLING_CTRL**: Enable / Disable IQ sampling
uint8_t	actv_idx	Activity Identifier (used only if operation is GAPM_STOP_ACTIVITY)
uint8_t	enable	True to enable IQ sampling, false to disable
uint8_t	slot_dur	Slot durations (1: 1us | 2: 2us)
uint8_t	max_sampl_cte	Max sampled CTEs
uint8_t	switching_pattern_len	Length of switching pattern
uint8_t [switching_pattern_len]	antenna_id	Array of antenna IDs

Response:

GAPM_CMP_EVT: When operation has been completed.

GAPM_PER_ADV_IQ_REPORT_IND: triggered if I/Q reports are enabled.

Description:

Control capturing IQ samples from the Constant Tone Extension of periodic advertising packets.

4.7.16 GAPM_PER_ADV_IQ_REPORT_IND

Parameters:

Type	Parameters	Description
uint8_t	actv_idx	Activity identifier
uint8_t	channel_idx	Data channel index
int16_t	rssi	RSSI (in 0.1 dBm)
uint8_t	rssi_antenna_id	RSSI antenna ID
uint8_t	cte_type	CTE type (0: AOA | 1: AOD-1us | 2: AOD-2us) (see Table 14)
uint8_t	slot_dur	Slot durations (1: 1us | 2: 2us)
uint8_t	pkt_status	Packet status
uint16_t	pa_evt_cnt	Periodic Adv Event Counter
uint8_t	nb_samples	Number of samples
struct gap_iq_sample [nb_samples]	sample	Array of I/Q sample (see Table 24)

Response:

N/A

Description:

Indicate reception of I/Q Report event over a periodic advertising sync activity.

4.7.17 GAPM_PER_ADV_CTE_TX_CTL_CMD

Parameters:

Type	Parameters	Description
uint8_t	operation	GAPM Operation Code (see Table 25): • **GAPM_PER_ADV_CTE_TX_CTL:** Control CTE transmission in a periodic advertising activity
uint8_t	actv_idx	Activity Identifier
uint8_t	enable	True to enable CTE transmission, false to disable

Response:

GAPM_CMP_EVT: When operation has been completed.

Description:

Control CTE transmission in a periodic advertising activity.

4.8 LE Protocol/Service Multiplexer management

The LE Protocol/Service Multiplexer identifiers accepted by local device are managed by GAPM task. These lists of supported identifiers are then used for the LE Credit Based Connection feature which is managed by L2CAP Controller task (see [7]).

This list of supported LE_PSM should be set after device configuration like the initialization of supported profile.

When a new LE_PSM is registered, application has to provide task that will handle LE Credit Based message from L2CAP controller task. Application has also to set security level requirement for the LE_PSM:

- No Security
- Unauthenticated encrypted link
- Authenticated Encrypted link
- Secure Connection Encrypted link
- If maximum encryption key size (16) is required

4.8.1 GAPM_LEPSM_REGISTER_CMD

Parameters:

Type	Parameters	Description
uint8_t	operation	GAPM Operation Code (see Table 25): • **GAPM_LEPSM_REG:** Register a LE Protocol/Service Multiplexer
uint16_t	le_psm	LE Protocol/Service Multiplexer
uint16_t	app_task	Application task number that mange reception of events
uint8_t	sec_lvl	Security Level : 7 | 6 | 5 | 4 | 3 | 2 | 1 | 0 MI | RESERVED | EKS | SEC_LVL • MI: 1 - Application task is a Multi-Instantiated task, 0 - Mono-Instantiated Only applies for service - Ignored by collectors: • EKS: Service needs a 16 bytes encryption key • SEC_LVL: 0 – No Auth, 1 - Unauth, 2 – Auth, 3 – Secure connection

Response:

GAPM_CMP_EVT: When operation completed.

Description:

This command is used to register a LE Protocol/Service Multiplexer (LE_PSM) identifier in the device allowing a peer device to create a LE Credit Based Connection on it (see [7]).

Profile must be added after execution of GAPM_SET_DEV_CONFIG_CMD.

Note: Registered LE_PSM are freed if a GAPM_RESET_CMD or GAPM_SET_DEV_CONFIG_CMD commands are executed.

4.8.2 GAPM_LEPSM_UNREGISTER_CMD

Parameters:

Type	Parameters	Description
uint8_t	operation	GAPM Operation Code (see Table 25): • **GAPM_LEPSM_UNREG:** Unregister a LE Protocol/Service Multiplexer
uint16_t	le_psm	LE Protocol/Service Multiplexer

Response:

GAPM_CMP_EVT: When operation completed.

Description:

This command is used to unregister a LE Protocol/Service Multiplexer (LE_PSM) identifier in the device.

This can be done only if no LE Credit Based Connection is established for this LE_PSM identifier.

4.9 Profile Configuration

Our stack implementation supports a large amount of profiles; for each profiles, a minimum of two tasks is implemented, one for the server, one for the client. Those tasks should support multiple connections.

In a normal use case, an application should not support all profile and services at the same time; number of profile should be limited to a certain amount of profile tasks. To do so, an Array in Generic Access Profile environment variable is used to manage profile tasks. This array contains the task descriptor and a pointer to environment heap.

At start-up application decides profiles that can be started (both client and server tasks). For server task, it means that corresponding attribute database will be loaded.

Profile manage allocation of its task state array, and its environment memory (static and for each links).

Number of profile tasks managed by Generic Access Profile is controlled by a compilation flag.

4.9.1 GAPM_PROFILE_TASK_ADD_CMD

Parameters:

Type	Parameters	Description
uint8_t	operation	GAPM Operation Code (see Table 25): • **GAPM_PROFILE_TASK_ADD**: Add new profile task
uint8_t	sec_lvl	Security Level : 7 6 5 4 3 2 1 0 Reserved DIS AUTH EKS MI • MI: 1 - Application task is a Multi-Instantiated task, 0 - Mono-Instantiated Only applies for service - Ignored by collectors: • EKS: Service needs a 16 bytes encryption key • AUTH: 0 – No Auth, 1 - Unauth, 2 – Auth, 3 – Secure connection • DIS: 1 - e, 0 - Enable
uint16_t	prf_task_id	Profile task identifier of profile to add
uint16_t	app_task	Application task number that mange reception of events
uint16_t	start_hdl	Service start handle (Only applies for services - Ignored by collectors) • 0: dynamically allocated in Attribute database
uint32_t[]	param	32 bits value that contains value to initialize profile (database parameters, etc...)

Response:

GAPM_PROFILE_ADDED_IND: Inform that profile task has been added.

GAPM_CMP_EVT: When operation completed.

Description:

This command is used to allocate a task for a specific profile (service or client). During this command execution, attribute database for this profile and required environment variables are allocated.

Profile must be added after execution of GAPM_SET_DEV_CONFIG_CMD.

Parameter field should be set according to profile settings which are described in corresponding profile interface specifications.

Note: Allocated profiles are freed if a GAPM_RESET_CMD or GAPM_SET_DEV_CONFIG_CMD commands are executed.

4.9.2 GAPM_PROFILE_ADDED_IND

Parameters:

Type	Parameters	Description
uint16_t	prf_task_id	Profile task identifier of profile added
uint16_t	prf_task_nb	Profile task number allocated (task number that shall be used to communicate with profile)
uint16_t	start_hdl	Service start handle allocated (Ignored by collectors)

Description:

Event triggered when a profile task is added. This informs the receiver of the task number allocated for added profile by the stack.

4.10 Secure Connection

API used to use ECDH algorithm from application:

- Read device P-256 public key
- Generate DH-key using peer public key

4.10.1 GAPM_GET_PUB_KEY_CMD

Parameters:

Type	Parameters	Description
uint8_t	operation	GAPM Operation Code (see Table 25): • **GAPM_GET_PUB_KEY**: Read P-256 Public Key

Response:

GAPM_PUB_KEY_IND: triggered when P-256 Public Key properly read

GAPM_CMP_EVT: When operation completed.

Description:

Read the local P-256 Public Key. This key is renewed each time this command is called by requester and so each pairing using secure connection.

4.10.2 GAPM_PUB_KEY_IND

Parameters:

Type	Parameters	Description
uint8_t[32]	pub_key_x	Local P-256 Public key X coordinate (LSB Format)
uint8_t[32]	pub_key_y	Local P-256 Public key Y coordinate (LSB Format)

Description:

Event triggered when Local P-256 public key value.

4.10.3 GAPM_GEN_DH_KEY_CMD

Parameters:

Type	Parameters	Description
uint8_t	operation	GAPM Operation Code (see Table 25): • **GAPM_GEN_DH_KEY**: Generate DH-KEY
uint8_t[32]	operand_1	Peer Public key X coordinate (LSB Format)
uint8_t[32]	operand_2	Peer Public key Y coordinate (LSB Format)

Response:

GAPM_GEN_DH_KEY_IND: triggered when DH-Key Computed

GAPM_CMP_EVT: When operation completed.

Description:

Compute DH-key value using peer public key pair

4.10.4 GAPM_GEN_DH_KEY_IND

Parameters:

Type	Parameters	Description
uint8_t[32]	result	Computed DH-Key value (LSB Format)

Description:

Event triggered when DH-key is properly computed.

4.10.5 GAPM_GEN_OOB_DATA_CMD

Parameters:

Type	Parameters	Description
uint8_t	operation	GAPM Operation Code (see Table 25): • **GAPM_GEN_OOB_DATA**: Generate OOB Data

Response:

GAPM_OOB_DATA_IND: triggered when OOB data computed

GAPM_CMP_EVT: When operation completed.

Description:

Generate some OOB Data before a secure connection paring

4.10.6 GAPM_OOB_DATA_IND

Parameters:

Type	Parameters	Description
uint8_t[16]	conf	Confirm Value
uint8_t[16]	rand	Random Number

Description:

Event triggered when OOB data computed.

5 GAP Controller (GAPC)

Generic Access Profile Controller (GAPC) is a multi-instantiated GAP task used to manage connection to a peer device.

The GAPC API should be used to:

- Retrieve peer device information
- Start pairing procedure
- Encrypt the link
- Disconnect the link
- Negotiate LE Credit Based L2CAP Connection

Information about connection index:

One task instance is created for each established link. Each instance of the task is related to a connection index (conidx) with a valid value range: **[0: BLE_CONNECTION_MAX]**

Corresponding GAPC task instance can be retrieve by doing: **((conidx << 8) | TASK_GAPC)**.

Messages exchanged to and from the RW-BLE GAP can be any of the following:

- ✓ **Command**: Always completed with "**complete event**" message
- ✓ **Indication**
- ✓ **Indication request** that requires a **confirmation** message from application.

The GAP Controller block has handlers for these messages, defined in gapc_task files (.h/.c).

5.1 Operations Flags

The block uses request flag options embedded in the interface message sent to GAP Controller. This flag ensures correct handling of the operation request from the application.

Value	Flag	Description
0x00	GAPC_NO_OP	No operation
	Connection management	
0x01	GAPC_DISCONNECT	Disconnect link
	Connection information	
0x02	GAPC_GET_PEER_NAME	Retrieve name of peer device.
0x03	GAPC_GET_PEER_VERSION	Retrieve peer device version info.
0x04	GAPC_GET_PEER_FEATURES	Retrieve peer device features.
0x05	GAPC_GET_PEER_APPEARANCE	Retrieve peer device appearance
0x06	GAPC_GET_PEER_SLV_PREF_PARAMS	Retrieve peer device Slaved Preferred Parameters
0x07	GAPC_GET_CON_RSSI	Retrieve connection RSSI.
0x08	GAPC_GET_CON_CHANNEL_MAP	Retrieve Connection Channel MAP.
	Connection parameters update	
0x09	GAPC_UPDATE_PARAMS	Perform update of connection parameters.
	Security procedures	
0x0A	GAPC_BOND	Start bonding procedure.
0x0B	GAPC_ENCRYPT	Start encryption procedure.
0x0C	GAPC_SECURITY_REQ	Start security request procedure
	LE Ping Management	
0x12	GAPC_GET_LE_PING_TO	Get timer timeout value
0x13	GAPC_SET_LE_PING_TO	Set timer timeout value
	LE Data Length Extension	
0x14	GAPC_SET_LE_PKT_SIZE	LE Set Data Length
	Enhanced Privacy	
0x15	GAPC_GET_ADDR_RESOL_SUPP	Central Address Resolution Supported
0x1D	GAPC_GET_RSLV_PRIV_ADDR_ONLY	Resolvable Private Address Only declaration
	Keypress Notification	
0x16	GAPC_KEY_PRESS_NOTIFICATION	Send key press notification.
	PHY Management	
0x17	GAPC_SET_PHY	Set the PHY configuration for current active link
0x18	GAPC_GET_PHY	Retrieve PHY configuration for the active link
	Channel Selection Algorithm	
0x19	GAPC_GET_CHAN_SEL_ALGO	Retrieve Channel Selection Algorithm used for the link
	Vendor specific connection parameters	

0x1A	GAPC_SET_PREF_SLAVE_LATENCY	Set preferred slave latency
0x1B	GAPC_SET_PREF_SLAVE_EVT_DUR	Set the preferred slave event duration (for slave only, with RW controller)
0x1D	GAPC_SET_MAX_RX_SIZE_AND_TIME	Set preferred maximum RX size and time using DLE negotiation
0x1E	GAPC_SET_PRIO_ELEVATION	Set priority elevation level
	Periodic Sync Transfer	
0x1C	GAPC_PER_ADV_SYNC_TRANS	Transfer periodic advertising sync information to peer device
	Constant Tone Extension	
0x20	GAPC_CTE_TX_CFG	Constant Tone Extension Transmission configuration
0x21	GAPC_CTE_RX_CFG	Constant Tone Extension Reception configuration
0x22	GAPC_CTE_REQ_CTRL	Constant Tone Extension request control (enable / disable)
0x23	GAPC_CTE_RSP_CTRL	Constant Tone Extension Response control (enable / disable)

Table 62: GAPC Operation Flags

5.2 Generic Interface

The generic GAP Controller offers a set of commands that are completed with following command completed event message.

5.2.1 GAPC_CMP_EVT

Parameters:

Type	Parameters	Description
uint8_t	operation	GAPM operation code (see Table 62)
uint8_t	status	Status of the operation (see [4])

Description:

Complete event for GAP operation. This is the generic complete event for GAP operations. All operation triggers this event when operation is finished

5.3 Connection Information and Management

The generic GAP Controller offers a set of commands and events in order to manage connection state:

- Be informed about connection establishment
- Disconnect a link
- Be informed when a link is disconnected
- Set connection related bonding data.

5.3.1 GAPC_CONNECTION_REQ_IND

Parameters:

Type	Parameters	Description
uint16_t	conhdl	Connection handle
uint16_t	con_interval	Connection interval N Value Time = N * 1.25 ms
uint16_t	con_latency	Connection latency (number of events)
uint16_t	sup_to	Link supervision timeout N Value Time = N * 10 ms
uint8_t	clk_accuracy	Clock accuracy (ppm)
uint8_t	peer_addr_type	Peer address type (0 – Public, 1 – Private)
bd_addr	peer_addr	Peer BT address

Description:

Inform that a connection has been established with a peer device. This message is a request because it is waiting for GAPC_CONNECTION_CFM message in order to:

- Set connection bond data
- Authentication and authorization link configuration

The confirmation message will then enable the attribute database and security manager in order to process requests from peer device.

Before sending confirmation message, application can perform address resolution in order to retrieve if it's a known device and also start some services.

When a link is established, a corresponding task instance is created for all connection related tasks (GATTC, L2CC).

5.3.2 GAPC_CONNECTION_CFM

Parameters:

Type	Parameters	Description
gap_sec_key	lcsrk	Local CSRK value
uint32_t	lsign_counter	Local signature counter value
gap_sec_key	rcsrk	Remote CSRK value
uint32_t	rsign_counter	Remote signature counter value
uint8_t	pairing_lvl	Pairing level (see Table 5)
uint8_t	cli_info	Client bond data information (see Table 63)
uint8_t	ltk_present	LTK exchanged during pairing.
uint8_t	cli_feat	Client supported features (see Table 64)
uint16_t	gatt_start_handle	Peer GATT Service Start handle
uint16_t	gatt_end_handle	Peer GATT Service End Handle
uint16_t	svc_chg_handle	Peer Service Change value handle

❖ **gapc_cli_info**

Bit	Flag	Description
0	GAPC_SVC_CHANGED_IND_EN_BIT	Service changed indication enabled
1	GAPC_DB_UPDATED_BIT	Database updated since last connection
2-7	RFU	Reserved for future use

Table 63: Client bond information (bit field)

❖ **gapc_cli_feat**

Bit	Flag	Description
0	GAPC_ROBUST_CACHE_EN_BIT	Robust Cache feature enabled
1-7	RFU	Reserved for future use

Table 64: Client supported features (bit field)

Response:

None

Description:

Set specific link security configuration and bonding data:

- Set connection bond data
- Authentication and authorization link configuration

This confirmation message shall be sent by application after receiving a GAPC_CONNECTION_REQ_IND in order to enables local attribute tasks and security manager for the connection.

It can be resent later if peer device information is retrieved later (for instance when a master initiates an encryption, information of the LTK can be used to identify peer device). In fact, when encryption is initiated by master device, it uses a couple of encryption diversifier (ediv) and random number (rand_nb) that can be used to retrieve corresponding encryption Long Term Key (LTK) that has been exchanged during a previous connection. By retrieving the LTK, we retrieve a known device and in that case before terminating encryption procedure, application shall update connection parameters.

Note: If authentication parameter is marked has “Not Bonded”, other parameters are ignored and peer device is considered as an unknown device.

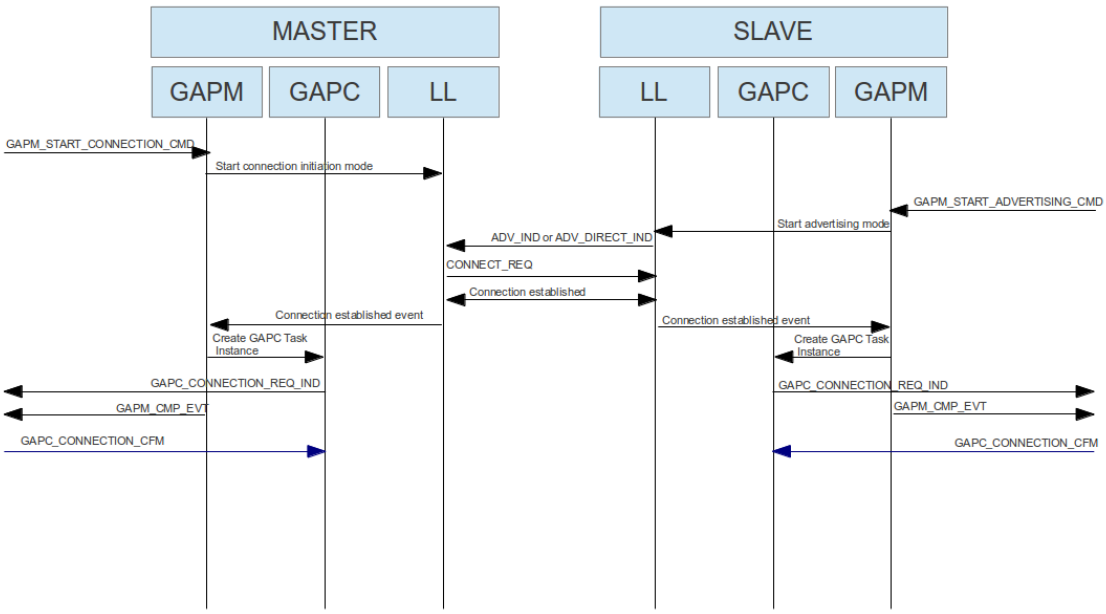

Usage of GAPC_CONNECTION_CFM in a connection procedure flow chart

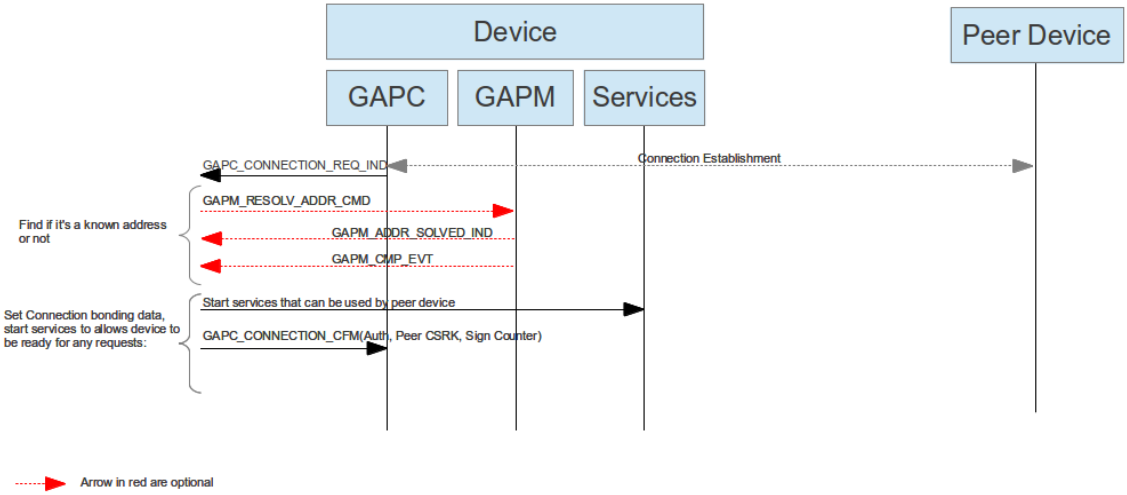

Usage of GAPC_CONNECTION_CFM in connection establishment after resolving peer address flow chart

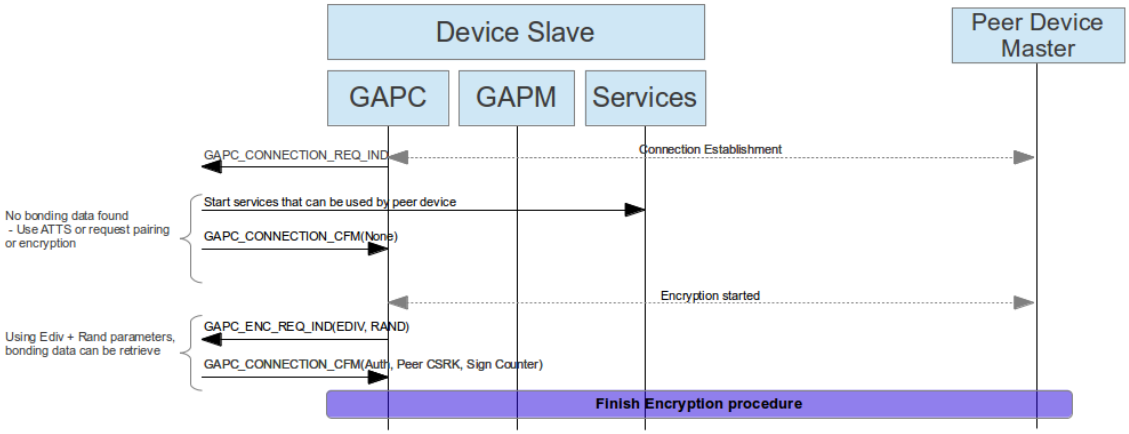

Usage of GAPC_CONNECTION_CFM in connection establishment after encryption request flow chart

5.3.3 GAPC_DISCONNECT_CMD

Parameters:

Type	Parameters	Description
uint8_t	operation	GAPC requested operation (see Table 62): • **GAPC_DISCONNECT**: Disconnect link.
uint8_t	reason	Reason of disconnection (see Table 9).

Response:

GAPC_DISCONNECT_IND: Event triggered when connection is finished.

GAPC_CMP_EVT: When operation completed.

Description:

Request for disconnection of the link. This can be requested by master or slave of the connection.

Reason of disconnection shall be a valid disconnection reason (see Table 9).

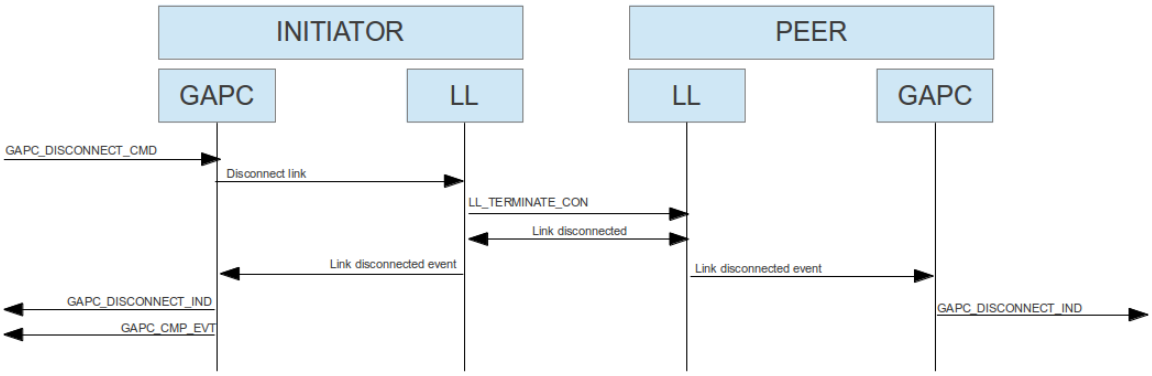

Disconnection operation flow chart

5.3.4 GAPC_DISCONNECT_IND

Parameters:

Type	Parameters	Description
uint16_t	conhdl	Connection handle
uint8_t	reason	Reason of disconnection (see Bluetooth error code in Bluetooth core spec [1])

Description:

Event sent to application task in order to inform that link has been disconnected. Receiving this message also means that task instances related to the link are cleaned-up and corresponding task instances cannot be used anymore until new connection is established.

5.4 Local and Peer Device Information

GAP Controller provides a message API in order to access to the peer device information and modify privacy settings.

❖ **gapc_dev_info**

Value	Flag	Description
0x00	GAPC_DEV_NAME	Device Name
0x01	GAPC_DEV_APPEARANCE	Device Appearance Icon
0x02	GAPC_DEV_SLV_PREF_PARAMS	Device Slave preferred parameters
0x03	GAPC_DEV_CTL_ADDR_RESOL	Device Central address resolution
0x04	GAPC_DEV_RSLV_PRIV_ADDR_ONLY	Resolvable Private address only after bond

Table 65: List of device info that should be provided by application

❖ **union gapc_dev_info_val**

Type	Parameters	Description
struct gap_dev_name	name	Device name (if GAPC_DEV_NAME requested, see Table 21)
uint16_t	appearance	Appearance Icon (if GAPC_DEV_APPEARANCE requested)
struct gap_slv_pref	slv_params	Slave preferred parameters (if GAPC_DEV_SLV_PREF_PARAMS requested, see Table 22)
uint8_t	cnt_addr_resol	Central address resolution availability
uint8_t	rslv_priv_addr_only	Resolvable Private address only

Table 66: Device Information Data Union

5.4.1 GAPC_GET_INFO_CMD

Parameters:

Type	Parameters	Description
uint8_t	operation	GAPC requested operation (see Table 62): • **GAPC_GET_PEER_NAME**: Retrieve name of peer device. • **GAPC_GET_PEER_VERSION**: Retrieve peer device version info. • **GAPC_GET_PEER_FEATURES**: Retrieve peer device features. • **GAPC_GET_CON_RSSI**: Retrieve connection RSSI. • **GAPC_GET_CON_CHANNEL_MAP:** Retrieve Connection Channel MAP. • **GAPC_GET_PEER_APPEARANCE**: Get Peer device appearance • **GAPC_GET_PEER_SLV_PREF_PARAMS**: Get Peer device Slaved Preferred Parameters • **GAPC_GET_LE_PING_TIMEOUT**: Retrieve LE Ping Timeout Value • **GAPC_GET_ADDR_RESOL_SUPP:** Check if Central Address Resolution is supported • **GAPC_GET_RSLV_PRIV_ADDR_ONLY**: Resolvable Private Address Only declaration • **GAPC_GET_PHY:** Get PHY currently used by the link • **GAPC_GET_CHAN_SEL_ALGO:** Get Channel Selection Algorithm currently used by the link

Response:

GAPC_PEER_ATT_INFO_IND: Event triggered when peer device attribute DB info such as device name, appearance, slave preferred parameters or address resolution supported is requested.

GAPC_PEER_VERSION_IND: Event triggered when peer device version is requested

GAPC_PEER_FEATURES_IND: Event triggered when peer device features are requested

GAPC_CON_RSSI_IND: Event triggered when connection RSSI is requested

GAPC_CON_CHANNEL_MAP_IND: Event triggered when connection channel map is requested

GAPC_LE_PING_TO_VAL_IND: Event triggered when LE Ping timeout value is requested

GAPC_LE_PHY_IND: Event triggered when RX/TX PHYs are requested

GAPC_CHAN_SEL_ALGO_IND: Event triggered when current channel selection algorithm is requested.

GAPC_CMP_EVT: When operation completed.

Description:

Retrieve information about peer device or about the current active link.

5.4.2 GAPC_PEER_ATT_INFO_IND

Parameters:

Type	Parameters	Description
uint8_t	req	Requested information (see Table 65): - **GAPC_DEV_NAME**: Device Name - **GAPC_DEV_APPEARANCE**: Device Appearance Icon - **GAPC_DEV_SLV_PREF_PARAMS**: Device Slave preferred parameters - **GAPC_GET_ADDR_RESOL_SUPP**: Address resolution supported - **GAPC_GET_RSLV_PRIV_ADDR_ONLY**: Resolvable Private Address Only declaration
uint16_t	handle	Attribute handle
union gapc_dev_info_val	info	Device information data (see Table 66)

Description:

Event triggered when requesting peer device attribute DB info such as Device Name, Appearance or Slave Preferred Parameters.

5.4.3 GAPC_PEER_VERSION_IND

Parameters:

Type	Parameters	Description
uint16_t	compid	Manufacturer name
uint16_t	lmp_subvers	LMP subversion
uint8_t	lmp_vers	LMP version

Description:

Event triggered when peer device version is requested.

5.4.4 GAPC_PEER_FEATURES_IND

Parameters:

Type	Parameters	Description
uint8_t[8]	features	8-byte array for LE features

Description:

Event triggered when peer device features are requested.

5.4.5 GAPC_CON_RSSI_IND

Parameters:

Type	Parameters	Description
uint8_t	rssi	RSSI value

Description:

Event triggered when connection RSSI is requested.

5.4.6 GAPC_CON_CHANNEL_MAP_IND

Parameters:

Type	Parameters	Description
le_chnl_map	ch_map	Channel map value used for current connection (see Table 17).

Description:

Event triggered when connection channel map is requested.

5.4.7 GAPC_LE_PING_TO_VAL_IND

Parameters:

Type	Parameters	Description
uint16_t	timeout	Authenticated payload timeout value N Value Time = N * 10 ms

Description:

Indication of LE Ping timeout value

5.4.8 GAPC_SET_LE_PING_TO_CMD

Parameters:

Type	Parameters	Description
uint8_t	operation	GAPC requested operation (see Table 62): • **GAPC_SET_LE_PING_TO**: Set the LE Ping timeout value
uint16_t	timeout	Authenticated payload timeout value N Value Time = N * 10 ms

Response:

GAPC_CMP_EVT: When operation completed.

Description:

Change the LE Pink authenticated payload timeout value in lower layers for current link.

5.4.9 GAPC_GET_DEV_INFO_REQ_IND

Parameters:

Type	Parameters	Description
uint8_t	req	Requested information (see Table 65): - **GAPC_DEV_NAME**: Device Name - **GAPC_DEV_APPEARANCE**: Device Appearance Icon - **GAPC_DEV_SLV_PREF_PARAMS**: Device Slave preferred parameters

Description:

Event triggered when peer device requests local device info such as name, appearance or slave preferred parameters. Application should answer with GAPC_GET_DEV_INFO_CFM message.

This value is not present in host stack and should be managed by application to reduce size of GAP attribute database.

5.4.10 GAPC_GET_DEV_INFO_CFM

Parameters:

Type	Parameters	Description
uint8_t	req	Requested information (see Table 65): - **GAPC_DEV_NAME**: Device Name - **GAPC_DEV_APPEARANCE**: Device Appearance Icon - **GAPC_DEV_SLV_PREF_PARAMS**: Device Slave preferred parameters
union gapc_dev_info_val	info	Device information data (see Table 66)

Description:

Send requested info to peer device

5.4.11 GAPC_LE_PKT_SIZE_IND

Parameters:

Type	Parameters	Description
uint16_t	max_tx_octets	The maximum number of payload octets in TX
uint16_t	max_tx_time	The maximum time that the local Controller will take to TX
uint16_t	max_rx_octets	The maximum number of payload octets in RX
uint16_t	max_rx_time	The maximum time that the local Controller will take to RX

Description:

Event triggered when local data length extension parameters are modified either using GAPM_SET_DEV_CONFIG_CMD to define new suggested values or GAPC_SET_LE_PKT_SIZE_CMD to define the preferred packet length to be used by the controller.

5.4.12 GAPC_SET_LE_PKT_SIZE_CMD

Parameters:

Type	Parameters	Description
uint8_t	operation	GAPC requested operation (see Table 62): - **GAPC_SET_LE_PKT_SIZE**: Device Name
uint16_t	tx_octets	Preferred maximum number of payload octets that the local Controller should include in a single Link Layer Data Channel PDU.
uint16_t	tx_time	Preferred maximum number of microseconds that the local Controller should use to transmit a single Link Layer Data Channel PDU

Response:

GAPC_LE_PKT_SIZE_IND: Event triggered with the new values

GAPC_CMP_EVT: When operation is completed.

Description:

Command used to change current data length extension values in controller.

5.4.13 GAPC_SIGN_COUNTER_IND

Parameters:

Type	Parameters	Description
uint32_t	local_sign_counter	Local Sign Counter value
uint32_t	peer_sign_counter	Peer Sign Counter value

Description:

Indicate the current sign counters to the application, this value is updated when sending a signed attribute packet or when a packet signature is checked. Those counter values are data that must be kept for a bonded device and stored in non-volatile memory.

5.4.14 GAPC_SET_DEV_INFO_REQ_IND

Parameters:

Type	Parameters	Description
uint8_t	req	Requested information - **GAPC_DEV_NAME:** Device name - **GAPC_DEV_APPEARANCE:** Device appearance
union gapc_set_dev_info	info	name: gap_dev_name (length, value) appearance: Device appearance icon (uint8_t)

Description:

Indicate to the application the write request from the peer to modify either the device name or the appearance icon. This indication is done after the GAPC block has cleared the message to be sent to the application. At first, the GAPC upon receiving the WRITE_REQ_IND message would perform sanity check of the parameters (e.g. length, offset) plus authorization privilege of the peer to perform the write operation.

5.4.15 GAPC_SET_DEV_INFO_CFM

Parameters:

Type	Parameters	Description
uint8_t	req	Requested information - **GAPC_DEV_NAME:** Device name - **GAPC_DEV_APPEARANCE:** Device appearance
uint8_t	status	Status code if the write request has been approved or refused

Description:

Send the write confirmation to the stack.

5.5 Connection Parameters Management

GAP controller message API offers capability of modifying connection parameters.

According to Bluetooth Core specification, connection parameters can be updated directly only by master of the connection. However, mechanisms are provided which allow one side of the connection to propose some connection parameters, and the peer can refuse or accept them. Two different mechanism are provided to allow the connection parameters to be agreed:

- Using L2CAP Connection Parameter Update procedure
- Using the LLC Connection Parameter Update procedure

L2CAP Connection Parameter Update procedure will be used only if one or more of the LE slave Controller, the LE master Controller, the LE slave Host and the LE master Host do not support the Connection Parameters Request Link Layer Control Procedure. However, the determination of what procedure is used is transparent to the API user.

The following figures show different operations of the connection update procedure. The first 3 figures show operation when the LLC Connection Parameter Update procedure is not supported by the peer device. In the first figure, the Master device autonomously determines to change the connection parameters (without negotiating with the slave). In the second figure the Slave uses L2CAP to propose a new set of parameters to the Master, the master accepts these parameters (informing the slave over L2CAP) and then proceeds with the connection update.

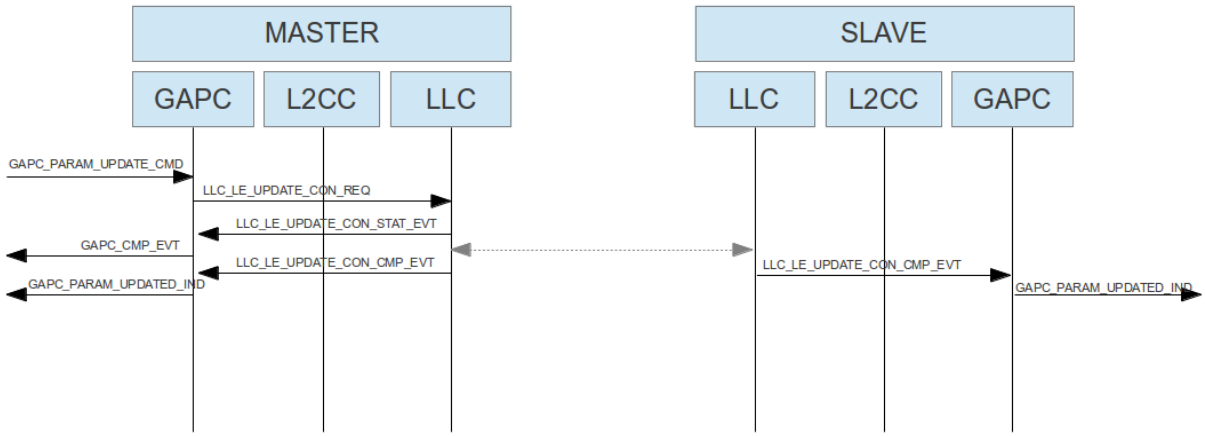

Parameter update initiated by Master (no LLC connection parameter update supported)

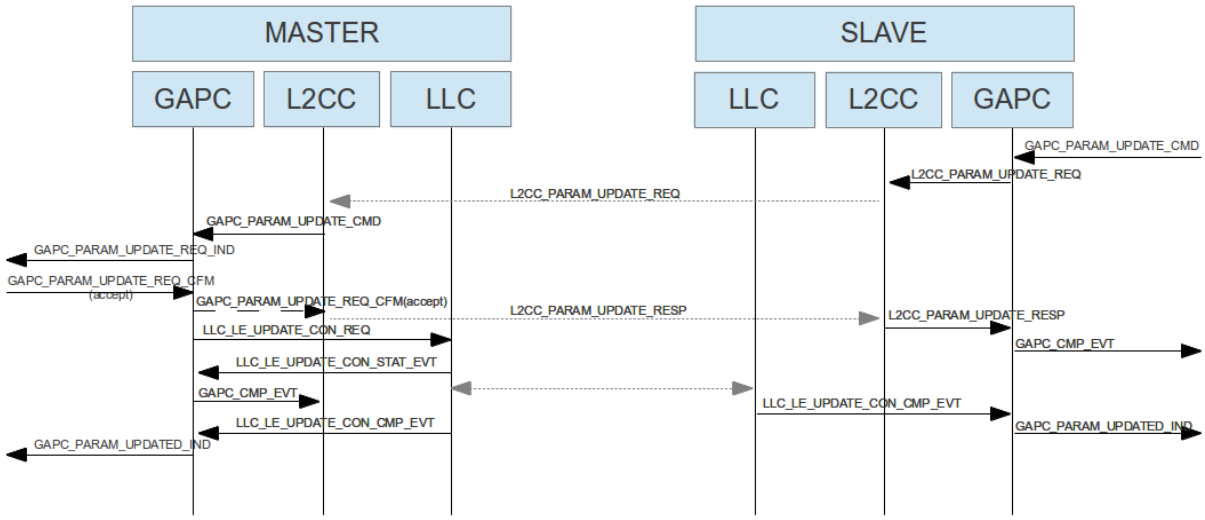

Parameter update initiated by Slave and accepted by Master (no LLC connection parameter update supported)

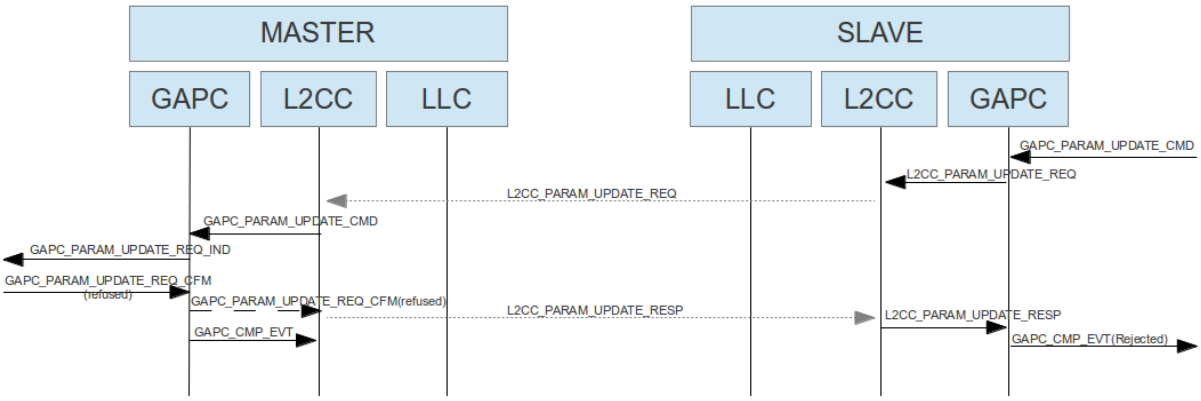

Parameter update initiated by Slave and rejected by Master (no LLC connection parameter update supported)

The following diagrams show the message flow when the LLC Connection Parameter Update procedure is supported by the peer device. In this case, the peer device (Master or Slave) is informed of the new connection parameters (via GAPC_PARAM_UPDATE_REQ_IND) and can accept/reject the new proposed parameters. Following acceptance the Master will proceed to update the connection parameters using the LLC Connection Update procedure.

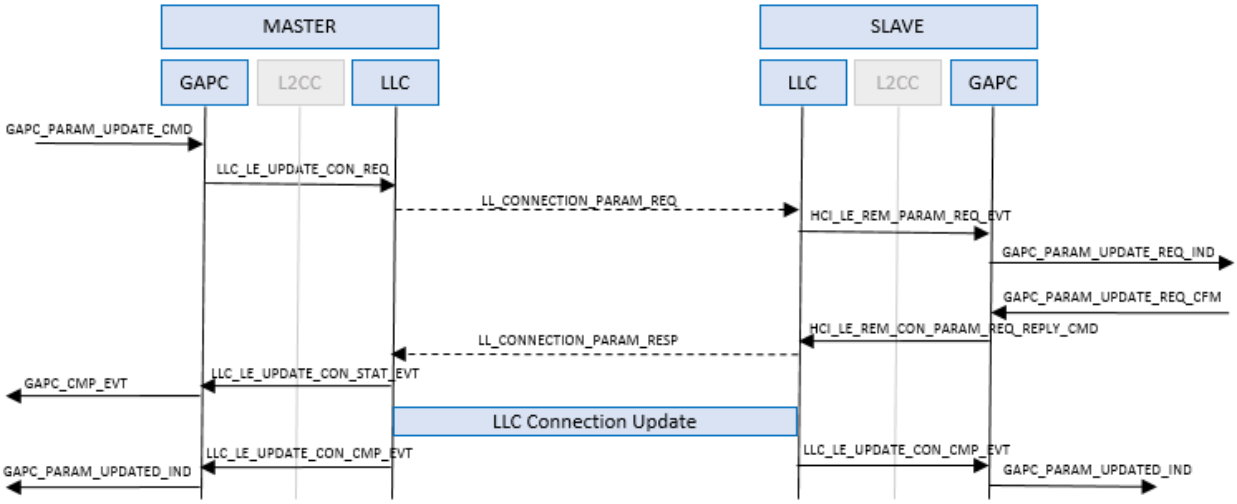

Parameter update initiated by the Master and accepted by the Slave (LLC Connection Parameter Update procedure supported)

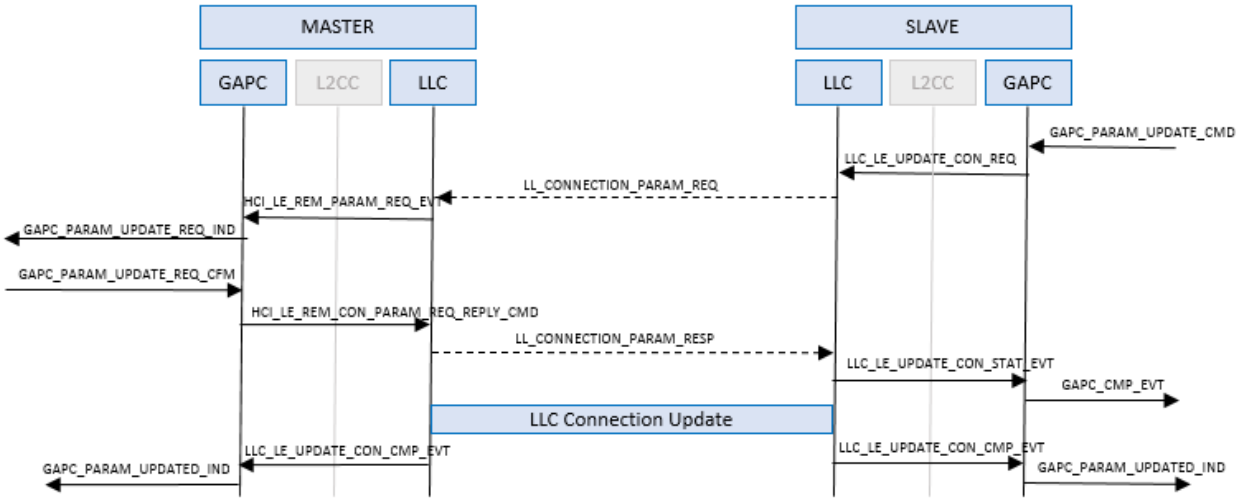

Parameter update initiated by the Slave and accepted by the Master (LLC Connection Parameter Update procedure supported)

5.5.1 GAPC_PARAM_UPDATE_CMD

Parameters:

Type	Parameters	Description
uint8_t	operation	GAPC requested operation (see Table 62): • **GAPC_UPDATE_PARAMS**: Perform update of connection parameters.
uint16_t	intv_min	Minimum of connection interval N Value Time = N * 1.25 ms
uint16_t	intv_max	Maximum of connection interval N Value Time = N * 1.25 ms
uint16_t	latency	Connection latency (number of events)
uint16_t	time_out	Link supervision timeout N Value Time = N * 10 ms
uint16_t	ce_len_min	Minimum CE length N Value Time = N * 0.625 ms
uint16_t	ce_len_max	Maximum CE length N Value Time = N * 0.625 ms

Response:

GAPC_PARAM_UPDATED_IND: event triggered if connection parameters are updated.

GAPC_CMP_EVT: When operation completed.

Description:

Connection parameter update command can be used by both master and slave of the connection.

As described in the previous section the actions performed are dependent on the features supported by the peer device.

If LLC Connection Parameter Request feature is not supported in the peer then if we are slave of the connection, a connection update message request will be send to master over L2CAP. The master will be able to accept or reject the proposed parameters. If master accept them, it will be in charge of applying them. If the LLC Connection Parameter Update Request feature is not supported and we are Master of the connection, then new connection parameters will be applied immediately

If the LLC Connection Parameter Request feature is supported by both devices, then either Master or Slave can propose new connection parameter to the peer device, which it can accept/reject.

Note: If Master or Slave of connection request update of connection parameters, a 30s timer will be started in order to let peer reply. If timer ends without response, link is automatically disconnected.

5.5.2 GAPC_PARAM_UPDATE_REQ_IND

Parameters:

Type	Parameters	Description
uint16_t	intv_min	Minimum of connection interval N Value Time = N * 1.25 ms
uint16_t	intv_max	Maximum of connection interval N Value Time = N * 1.25 ms
uint16_t	latency	Connection latency (number of events)
uint16_t	time_out	Link supervision timeout N Value Time = N * 10 ms

Description:

This message event is triggered on peer of the connection requests to update connection parameters.

This message shall be followed by GAPC_PARAM_UPDATE_CFM message to accept or not new connection parameters.

5.5.3 GAPC_PARAM_UPDATE_CFM

Parameters:

Type	Parameters	Description
uint8_t	accept	0x01 to accept slave connection parameters, 0x00 to reject the connection parameters.
uint16_t	ce_len_min	Minimum CE length N Value Time = N * 0.625 ms
uint16_t	ce_len_max	Maximum CE length N Value Time = N * 0.625 ms

Description:

Used by to accept or refuse connection parameters proposed by peer device.

5.5.4 GAPC_PARAM_UPDATED_IND

Parameters:

Type	Parameters	Description
uint16_t	con_interval	Connection interval value N Value Time = N * 1.25 ms
uint16_t	con_latency	Connection latency (number of events)
uint16_t	sup_to	Link supervision timeout N Value Time = N * 10 ms

Description:

Event triggered when parameters of the connection have been updated.

5.5.5 GAPC_SET_PREF_SLAVE_EVT_DUR_CMD

Parameters:

Type	Parameters	Description
uint8_t	operation	GAPC requested operation (see Table 62): - **GAPC_SET_PREF_SLAVE_EVT_DUR**
uint16_t	duration	Preferred event duration that the local slave controller should use on a connection (in 625us slots).
uint8_t	single_tx	If set, the slave transmits a single packet per connection event.

Response:

GAPC_CMP_EVT: When operation is completed.

Description:

Command used to set the preferred connection event duration for a slave device, within the range allowed by the master. The preferred connection event duration is used locally by the slave only if the value provided is lower than the connection event time limit considering other factors (i.e. connection interval, data length, PHY, etc…). If single_tx is set, Slave stops setting the MD bit in LL data PDU, in the purpose of doing a single transmission per connection event. Master is not informed that slave uses lower connection event duration or transmits a single packet per event, no negotiation procedure is started from this command. The preferred connection event duration is given to the controller via a Vendor Specific HCI command.

5.5.6 GAPC_SET_PREF_SLAVE_LATENCY_CMD

Parameters:

Type	Parameters	Description
uint8_t	operation	GAPC requested operation (see Table 62): - **GAPC_SET_PREF_SLAVE_LATENCY**
uint16_t	latency	Preferred latency that the local slave controller should use on a connection.

Response:

GAPC_CMP_EVT: When operation is completed.

Description:

Command used to set the preferred connection latency for a slave device, within the range allowed by the master. The preferred connection latency is used locally by the slave. Master is not informed that slave uses different connection latency than the one given at connection establishment or connection update. No negotiation procedure is started from this command. The preferred connection latency is given to the controller via a Vendor Specific HCI command.

Note 1: On connection update, slave switches to the slave latency given by master, regardless the custom latency provided earlier by this command. Application must resend this command to change preferred latency to a custom value.

Note 2: The BLE stack may use a smaller preferred latency in order to ensure synchronization to the master before Link Supervision Timeout (LSTO > (1 + connSlaveLatency) * connInterval * 2).

5.5.7 GAPC_SET_MAX_RX_SIZE_AND_TIME_CMD

Parameters:

Type	Parameters	Description
uint8_t	operation	GAPC requested operation (see Table 62): - **GAPC_SET_MAX_RX_SIZE_AND_TIME**
uint16_t	rx_octets	Maximum RX size (in Bytes)
uint16_t	rx_time	Maximum RX time (in us)

Response:

GAPC_CMP_EVT: When operation is completed.

Description:

Vendor specific command used to set maximum RX size and time. This is done using a data length extension negotiation with specified RX parameters.

5.5.8 GAPC_SET_PRIO_ELEVATION_CMD

Parameters:

Type	Parameters	Description
uint8_t	operation	GAPC requested operation (see Table 62): - **GAPC_SET_PRIO_ELEVATION**
uint8_t	elevation	Priority elevation (in units of increment)

Response:

GAPC_CMP_EVT: When operation is completed.

Description:

Vendor specific command used to set priority elevation level for a connection.

5.6 Bonding Procedure

GAP controller message API offers capability of bonding two devices.

According to Bluetooth Core specification, purpose of bonding is to create a relation between two Bluetooth devices based on a common link key (a bond). The link key is created and exchanged (pairing) during the bonding procedure and is expected to be stored by both Bluetooth devices, to be used for future authentication.

Bonding information (information exchange during the pairing) such as keys, authentication level should be stored in a non-volatile memory in order to be reused during another connection.

Note: The Bond procedure can be initiated only by master of the connection.

❖ **gapc_bond**

Value	Flag	Description
0x00	GAPC_PAIRING_REQ	Bond Pairing request
0x01	GAPC_PAIRING_RSP	Respond to Pairing request
0x02	GAPC_PAIRING_SUCCEED	Pairing Finished information
0x03	GAPC_PAIRING_FAILED	Pairing Failed information
0x04	GAPC_TK_EXCH	Used to retrieve pairing Temporary Key
0x05	GAPC_IRK_EXCH	Used for Identity Resolving Key exchange
0x06	GAPC_CSRK_EXCH	Used for Connection Signature Resolving Key exchange
0x07	GAPC_LTK_EXCH	Used for Long Term Key exchange
0x08	GAPC_REPEATED_ATTEMPT	Bond Pairing request issue, Repeated attempt

Table 67: Bonding procedure request or information code

❖ **gapc_pairing**

Type	Parameters	Description
uint8_t	iocap	IO capabilities (see Table 2)
uint8_t	oob	OOB information (see Table 3)
uint8_t	auth	Authentication (see Table 4)
uint8_t	key_size	Encryption key size (7 to 16)
uint8_t	ikey_dist	Initiator key distribution (see Table 6)
uint8_t	rkey_dist	Responder key distribution (see Table 6)
uint8_t	sec_req	Device security requirements (minimum security level) (see Table 7)

Table 68: Pairing information structure

❖ **gapc_ltk**

Type	Parameters	Description
struct gap_sec_key	ltk	Long Term Key (See Table 20)
uint16_t	ediv	Encryption Diversifier
struct rand_nb	randnb	Random Number (see Table 18)
uint8_t	key_size	Encryption key size (7 to 16)

Table 69: Long Term Key information

❖ **gapc_irk**

Type	Parameters	Description
struct gap_sec_key	ltk	Identity Resolving Key (See Table 20)
struct gap_bdaddr	addr	Device BD Address (See Table 19)

Table 70: Identity Resolving Key information

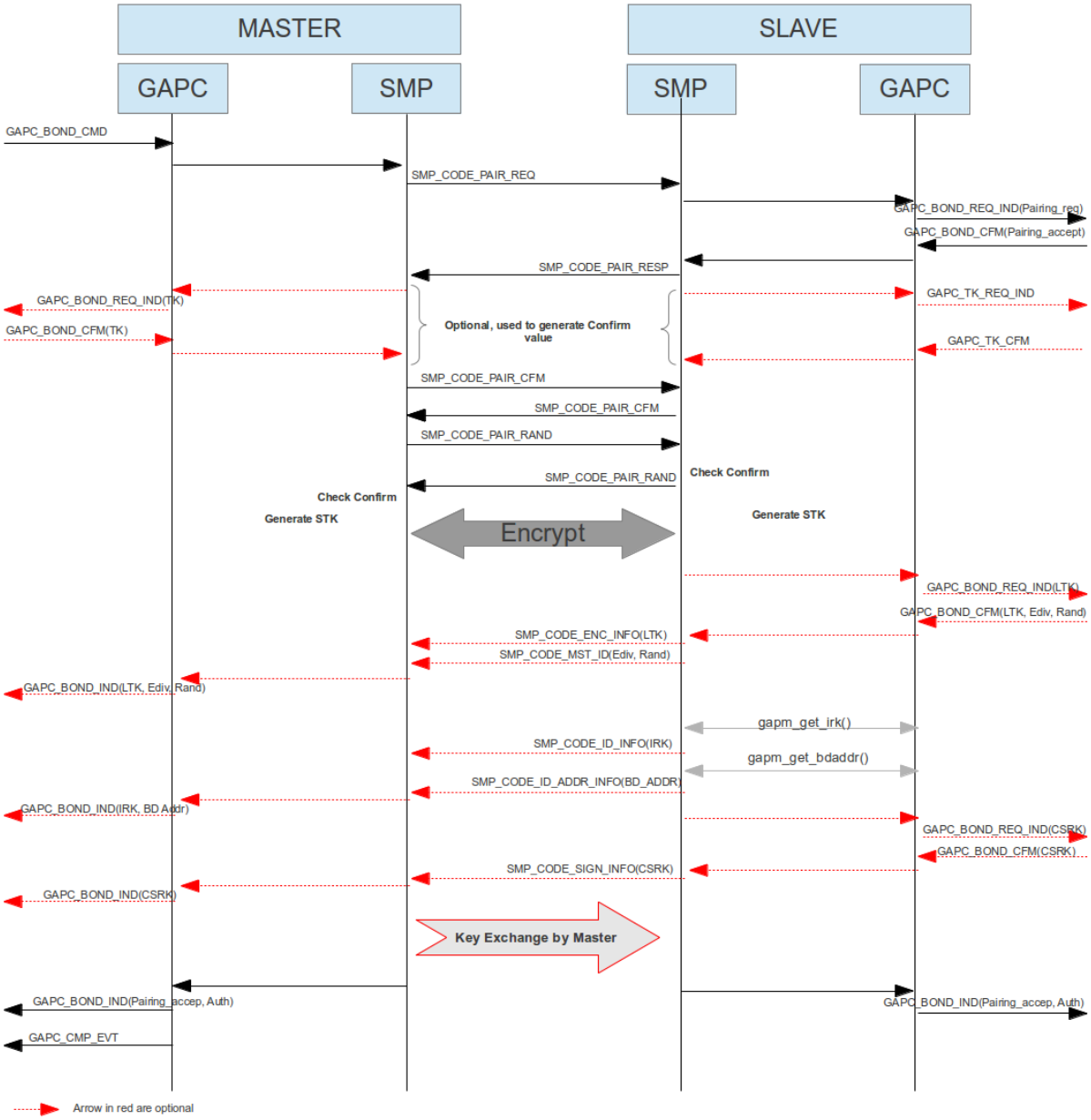

Bond operation flow chart

Information about keys:

- **Temporary Key** (TK): This key is used during pairing; it can be a key exchanged with out of band system such as NFC, or the pin code entered by user. During a Just Work pairing, this key is set to zero.
- **Short Term Key** (STK): Calculated according to pairing information and provided TK, it's used to encrypt the link during pairing in order to exchange following keys.
- **Long Term Key** (LTK): This key is used to encrypt the link. In order to retrieve link key, a random number and key diversifier has to be stored with this key.
- **Identity Resolving Key** (IRK): This key should be used to resolve the address used by a peer device if this one is using a resolvable random address. (see GAPM_RESOLV_ADDR_CMD command)

- **Connection Signature Resolving Key** (CSRK): when link is not encrypted, the CSRK should be used by GAP to sign and verify signature of an attribute write sign. It can be used to verify that peer device is authorized to modify an attribute.

Note: All keys provided by application to host stack shall be in LSB to MSB format. (see Bluetooth core spec to understand how to generate those keys [1])

Exchange of keys:

Algorithm used to exchange keys is simple. It's a mask between initiator and responder key parameters from Master and initiator and responder key parameters from slave.

All bits representing key to exchange by initiator will be provided by master of the connection to slave.

All bits representing key to exchange by responder will be provided by slave of the connection to master.

Authentication Level:

The authentication level provided during pairing can be modified in some cases:

- **Bonded Flag**: If no key can be exchanged during the pairing, the bonding flag is set to zero.
- **Man In The Middle protection (MITM) Flag**: According to IO capabilities or Out Of Band (OOB) property, if it is not possible to perform a pairing using a PIN code or OOB data, this flag is forced to zero. In that case a just work method (JW) will be used to calculate STK (TK will be set to zero).

Note: a just work paring allows a device sniffing data exchange in the air to calculate STK, so able to retrieve key exchange during the pairing.

Security requirement:

Security requirement can be used to force a certain level of authentication and presence of key exchange.

- **GAP_NO_SEC**: authentication level not checked. Key exchange not checked.
- **GAP_SEC1_NOAUTH_PAIR_ENC**: Man in the middle protection not checked, a LTK shall be exchanged.
- **GAP_SEC1_AUTH_PAIR_ENC**: Man in the middle protection shall be set to 1, a LTK shall be exchanged.
- **GAP_SEC2_NOAUTH_DATA_SGN**: Man in the middle protection not checked, a CSRK shall be exchanged.
- **GAP_SEC2_AUTH_DATA_SGN**: Man in the middle protection shall be set to 1, a CSRK shall be exchanged.

Pairing timeout:

If no security message is exchange during more than 30s, bonding procedure is canceled and no new bond procedure can be started for this link.

In case of a timeout error, the application should disconnect the link, but it is not mandatory.

5.6.1 GAPC_BOND_CMD

Parameters:

Type	Parameters	Description
uint8_t	operation	GAPC requested operation (see Table 62): • **GAPC_BOND**: Start bonding procedure.
struct gapc_pairing	pairing	Pairing information

Response:

GAPC_BOND_REQ_IND: Triggered if some information should be provided by device during the pairing.

GAPC_BOND_IND: Triggered in order to receive key exchanged by peer device and get pairing status.

GAPC_CMP_EVT: When operation completed.

Description:

This operation can be requested only by master of the link in order to initiate the bond procedure. It contains pairing requirement of initiator (see 5.6).

For an out of band pairing using secure connection, application can compute OOB data using GAPM_GEN_OOB_DATA_CMD (see 4.10.5) and send it to peer device before starting pairing.

5.6.2 GAPC_BOND_REQ_IND

Parameters:

Type	Parameters	Description
uint8_t	request	Bond request type (see Table 67)
union gapc_bond_req_data	data	Bond procedure requested information data (see Table 71)

❖ gapc_bond_req_data

Type	Parameters	Description
uint8_t	auth_req	Authentication level (see Table 4) (if request = GAPC_PAIRING_REQ)
uint8_t	key_size	LTK Key Size (if request = GAPC_IRK_EXCH)
uint8_t	tk_type	Device IO used to get TK: (if request = GAPC_TK_EXCH) (see Table 73)
struct gapc_nc	nc_data	Numeric Comparison Data (if request = GAPC_NC_EXCH)(see Table 72)

Table 71: Bond procedure requested information data

❖ gapc_nc

Type	Parameters	Description
uint8_t[4]	value	Numeric comparison value

Table 72: Numeric Comparison structure

❖ gap_tk_type

Value	Flag	Description
0x00	GAP_TK_OOB	TK get from out of band method
0x01	GAP_TK_DISPLAY	TK generated and shall be displayed by local device
0x02	GAP_TK_KEY_ENTRY	TK shall be entered by user using device keyboard

Table 73: Temporary Key Type

Description:

Event Triggered during a bonding procedure in order to get:

- Slave pairing information
- Pairing temporary key (TK)
- Key to provide to the peer device during key exchange.

This event shall be followed by a GAPC_BOND_CFM message with same request code value.

5.6.3 GAPC_BOND_CFM

Parameters:

Type	Parameters	Description
uint8_t	request	Bond request type (see Table 67)
uint8_t	accept	0x01 to accept request, 0x00 to reject request.
union gapc_bond_cfm_data	data	Bond procedure requested information data (see Table 74)

❖ gapc_bond_cfm_data

Type	Parameters	Description
struct gapc_pairing	pairing_feat	Pairing Features (request = GAPC_PAIRING_RSP) (see Table 68)
struct gapc_ltk	ltk	LTK (request = GAPC_LTK_EXCH) (see Table 69)
struct gap_sec_key	csrk	CSRK (request = GAPC_CSRK_EXCH) (See Table 20)
struct gap_sec_key	tk	TK (request = GAPC_TK_EXCH) (See Table 20)
struct gap_irk	irk	IRK (request = GAPC_IRK_EXCH) (See Table 70)
struct gapc_oob	oob	OOB Confirm and Random from the peer (request = GAPC_OOB_EXCH) (see Table 75)

Table 74: Bond procedure confirmed information data

❖ gapc_oob

Type	Parameters	Description
uint8_t[16]	conf	Confirm Value
uint8_t[16]	rand	Random Number

Table 75: Out of Band Information

Description:

Confirmation message to send after receiving a GAPC_BOND_REQ_IND message

This message can contain:

- Slave pairing information
- Pairing temporary key (TK)
- Key to provide to the peer device during key exchange.

5.6.4 GAPC_BOND_IND

Parameters:

Type	Parameters	Description
uint8_t	info	Bond information type (see Table 67)
union gapc_bond_data	data	Bond procedure information data

❖ gapc_bond_data

Type	Parameters	Description
struct gapc_pairing_info	pairing	Pairing information (see Table 77) (if info = GAPC_PAIRING_SUCCEED)
uint8_t	reason	Pairing failed reason (if info = GAPC_PAIRING_FAILED) (see SMP error codes)
struct gapc_ltk	ltk	Long Term Key information (if info = GAPC_LTK_EXCH) (see Table 69)
struct gap_sec_key	csrk	Connection Signature Resolving Key information (if info = GAPC_CSRK_EXCH) (See Table 20)
struct gapc_irk	irk	Identity Resolving Key information (if info = GAPC_IRK_EXCH) (See Table 70)

Table 76: Bond procedure requested information data

❖ gapc_pairing_info

Type	Parameters	Description
uint8_t	level	Pairing level achieved (see Table 5)
bool	ltk_present	LTK exchanged during pairing.

Table 77: Pairing information

Description:

Event triggered when bonding information is available such as:

- Status of the pairing (succeed or failed)
- Key exchanged by peer device.

5.6.5 GAPC_KEY_PRESS_NOTIFICATION_CMD

Parameters:

Type	Parameters	Description
uint8_t	operation	GAPC requested operation (see Table 62): • **GAPC_KEY_PRESS_NOTIFICATION**: Send to the peer a key press notification
Uint8_t	notification_type	Key press notification type: 0x00 - Passkey entry started 0x01 - Passkey digit entered 0x02 - Passkey digit erased 0x03 - Passkey cleared 0x04 - Passkey entry completed

Response:

GAPC_CMP_EVT: When operation completed.

Description:

Send a keypress notification to the peer when digit is entered or erased to prevent a timeout.

5.6.6 GAPC_KEY_PRESS_NOTIFICATION_IND

Parameters:

Type	Parameters	Description
uint8_t	notification_type	Key press notification type: 0x00 - Passkey entry started 0x01 - Passkey digit entered 0x02 - Passkey digit erased 0x03 - Passkey cleared 0x04 - Passkey entry completed

Description:

Indicate that a Key Press has been performed on the peer device.

5.7 Encryption Procedure

Part of Bond procedure, the encryption procedure is used to encrypt the link using a previously **bonded** Long term Key (LTK)**.**

This procedure can be initiated only by master of the connection.

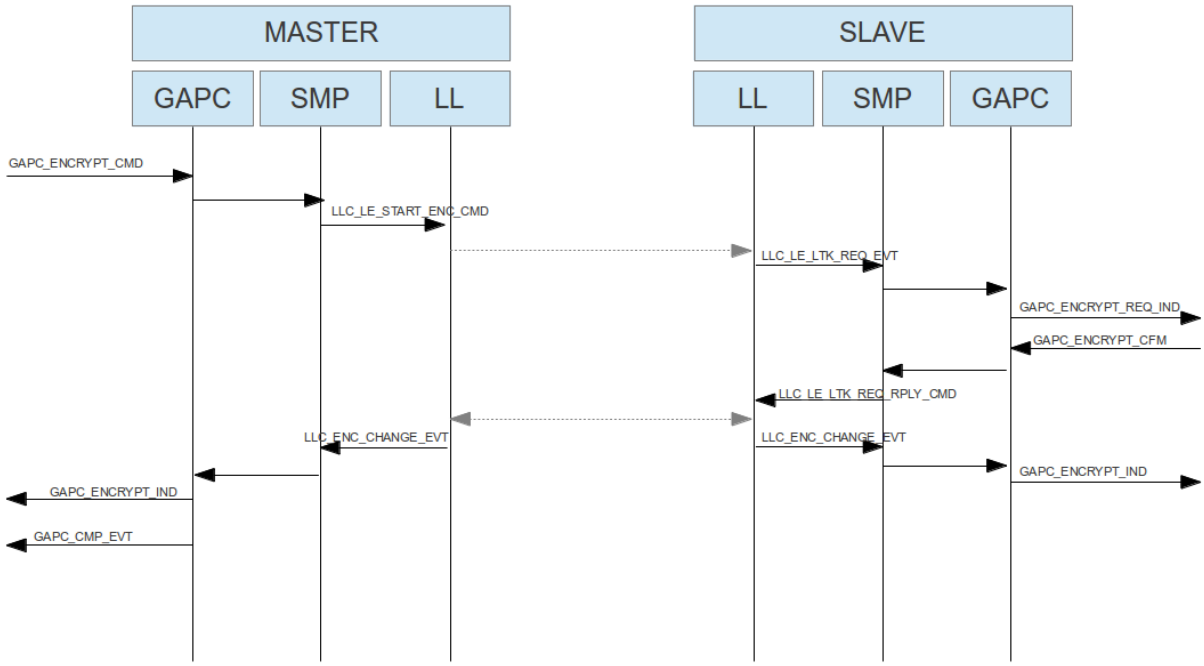

Encryption procedure initiated by master flow chart

Retrieve a known peer device:

Encryption diversifier and random number associated to LTK is provide during encryption procedure to Slave device in order to retrieve it in bonded data.

If device use a non-resolvable address, this information can be used to verify if peer device is known and set bonded data (see GAPC_CONNECTION_CFM).

LTK Problem – Lost Bond:

If LTK used for encrypting link is different between master and slave, it results to a disconnection with a **MIC Failure** reason.

If peripheral is not able to find encryption key, the encryption procedure is canceled and master can decide if link should be disconnected.

In both cases, device can consider that bonded data have been lost and those data can be removed from non-volatile memory.

In order to bond devices again, pairing procedure should be restarted.

5.7.1 GAPC_ENCRYPT_CMD

Parameters:

Type	Parameters	Description
uint8_t	operation	GAPC requested operation (see Table 62): • **GAPC_ENCRYPT**: Start encryption procedure.
struct gapc_ltk	ltk	Long Term Key information (see Table 69)

Response:

GAPC_ENCRYPT_IND: Triggered if encryption operation succeed.

GAPC_CMP_EVT: When operation completed.

Description:

This operation can be requested only by master of the link in order to initiate encryption procedure. It contains Long Term Key that should be used during the encryption.

5.7.2 GAPC_ENCRYPT_REQ_IND

Parameters:

Type	Parameters	Description
uint16_t	ediv	Encryption Diversifier
struct rand_nb	rand_nb	Random Number (see Table 18)

Description:

Event Triggered during encryption procedure on slave device in order to retrieve LTK according to random number and encryption diversifier value.

This event shall be followed by a GAPC_ENCRYPT_CFM message.

5.7.3 GAPC_ENCRYPT_CFM

Parameters:

Type	Parameters	Description
uint8_t	found	Indicate if a LTK has been found for the peer device (0x00 = not found)
struct gap_sec_key	ltk	Long Term Key (See Table 20) (0 if not found)
uint8_t	key_size	LTK Key Size

Description:

Confirmation message to send after receiving a GAPC_ENCRYPT_REQ_IND message

This message can is used to inform if encryption key has been found, if yes found Long Term Key and its size shall be provided.

5.7.4 GAPC_ENCRYPT_IND

Parameters:

Type	Parameters	Description
uint8_t	pairing_lvl	Pairing level (see Table 5)

Description:

Event triggered when encryption procedure succeed, it contains the link authentication level provided during connection confirmation (see GAPC_CONNECTION_CFM)

5.8 Security Request Procedure

Part of Bond procedure, the security request procedure is used for requesting peer device to initiate a procedure in order to have specific authentication level on current link**.**

This procedure can be initiated only by slave of the connection.

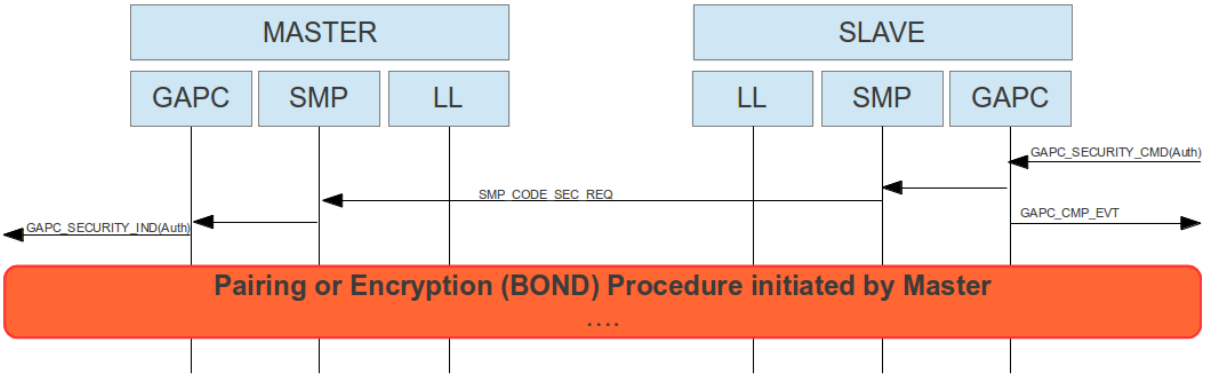

Security request procedure initiated by slave flow chart

Since slave of the connection cannot initiate pairing or link encryption, according to its bonding data and its security requirements, it can request master to have a certain level of authentication on the link.

When receiving the security request indication, master of the link can decide to initiate pairing or encryption according to its bond data.

Note: Slave of the device can also use security request on an encrypted link in order to increase link security level (for instance have authenticated link with Man in the middle protection)

5.8.1 GAPC_SECURITY_CMD

Parameters:

Type	Parameters	Description
uint8_t	operation	GAPC requested operation (see Table 62): • **GAPC_ENCRYPT**: Start encryption procedure.
uint8_t	auth	Authentication level requested (see Table 4)

Response:

GAPC_CMP_EVT: When operation completed.

Description:

This operation can be requested only by slave of the link in order to initiate security request procedure. It contains authentication level requested by current device.

5.8.2 GAPC_SECURITY_IND

Parameters:

Type	Parameters	Description
uint8_t	auth	Authentication level requested by peer device (see Table 4)

Description:

Event Triggered on master side when slave request to have a certain level of authentication.

5.9 PHY Management

5.9.1 GAPC_SET_PHY_CMD

Parameters:

Type	Parameters	Description
uint8_t	operation	GAPC requested operation (see Table 62): • **GAPC_SET_PHY**: Update PHY preferences for the connection
uint8_t	tx_phy	Preferred LE PHYs for transmission (see Table 10)
uint8_t	rx_phy	Preferred LE PHYs for reception (see Table 10)
uint8_t	phy_opt	PHY options (preferred coding scheme for LE Coded PHY: see Table 78)

❖ **gapc_phy_option**

Value	Flag	Description
0x00	GAPC_PHY_OPT_LE_CODED_ALL_RATES	No preference rate on LE Coded PHY
0x01	GAPC_PHY_OPT_LE_CODED_500K_RATE	500kbps rate preferred on LE Coded PHY
0x02	GAPC_PHY_OPT_LE_CODED_125K_RATE	125kbps rate preferred on LE Coded PHY

Table 78: Coded PHY options

Response:

GAPC_CMP_EVT: When operation completed.

Description:

This operation sets the preferred PHY for current active link. It triggers a negotiation with the peer device and can be used to update the PHYs used for the connection.

5.9.2 GAPC_LE_PHY_IND

Parameters:

Type	Parameters	Description
uint8_t	tx_phy	PHY used for transmission (see Table 11)
uint8_t	rx_phy	PHY used for reception (see Table 11)

Response:

N/A

Description:

Indicate the PHYs used for transmission and reception paths.

This message can be received either upon application request through the GAPC_GET_INFO_CMD with GAPM_GET_PHY operation or after a successful PHY update procedure triggered locally by using the GAPC_SET_PHY_CMD message and triggered by the peer device.

5.10 Channel Selection Algorithm

5.10.1 GAPC_CHAN_SEL_ALGO_IND

Parameters:

Type	Parameters	Description
uint8_t	chan_sel_algo	PHY options (preferred coding scheme for LE Coded PHY

Response:

N/A

Description:

Indicate the PHYs used for transmission and reception paths.

This message can be received either upon application request through the GAPC_GET_INFO_CMD with GAPM_GET_PHY operation or after a successful PHY update procedure triggered locally by using the GAPC_SET_PHY_CMD message and triggered by the peer device.

5.11 Periodic Sync Transfer

5.11.1 GAPC_PER_ADV_SYNC_TRANS_CMD

Parameters:

Type	Parameters	Description
uint8_t	operation	GAPC requested operation (see Table 62): • **GAPC_PER_ADV_SYNC_TRANS**: Periodic Advertising Sync Transfer
uint8_t	actv_idx	Periodic Advertising or Periodic Sync activity index
uint16_t	service_data	A value provided by application

Response:

GAPC_CMP_EVT: When operation completed.

Description:

Transfer periodic advertising sync information to peer device.

5.12 Constant Tone Extension

5.12.1 GAPC_CTE_TX_CFG_CMD

Parameters:

Type	Parameters	Description
uint8_t	operation	GAPC requested operation (see Table 62): • **GAPC_CTE_TX_CFG:** Constant Tone Extension Transmission configuration
uint8_t	cte_types	CTE types (bit0: AOA | bit1: AOD-1us | bit2: AOD-2us) (see Table 15)
uint8_t	switching_pattern_len	Length of switching pattern (number of antenna IDs in the pattern)
uint8_t[switching_pattern_len]	antenna_id	Array of antenna IDs

Response:

GAPC_CMP_EVT: When operation completed.

Description:

Command used to configure constant tone extension transmission.

5.12.2 GAPC_CTE_RX_CFG_CMD

Parameters:

Type	Parameters	Description
uint8_t	operation	GAPC requested operation (see Table 62): • **GAPC_CTE_RX_CFG:** Constant Tone Extension Reception configuration
uint8_t	sample_en	Sampling enable
uint8_t	slot_dur	Slot durations (1: 1us | 2: 2us)
uint8_t	switching_pattern_len	Length of switching pattern (number of antenna IDs in the pattern)
uint8_t[switching_pattern_len]	antenna_id	Array of antenna IDs

Response:

GAPC_CTE_IQ_REPORT_IND: IQ report generated if sampling enabled

GAPC_CMP_EVT: When operation completed.

Description:

Command used to configure constant tone extension reception.

5.12.3 GAPC_CTE_REQ_CTRL_CMD

Parameters:

Type	Parameters	Description
uint8_t	operation	GAPC requested operation (see Table 62): • **GAPC_CTE_REQ_CTRL**: Constant Tone Extension request control (enable / disable)
uint8_t	enable	True to enable TX or RX Constant Tone Extension, False to disable
uint16_t	interval	CTE request interval (in number of connection events)
uint8_t	cte_len	Requested CTE length (in 8us unit)
uint8_t	cte_type	CTE types (bit0: AOA | bit1: AOD-1us | bit2: AOD-2us) (see Table 14)

Response:

GAPC_CMP_EVT: When operation completed.

Description:

Command used to control constant tone extension request.

5.12.4 GAPC_CTE_RSP_CTRL_CMD

Parameters:

Type	Parameters	Description
uint8_t	operation	GAPC requested operation (see Table 62): • **GAPC_CTE_RSP_CTRL:** Constant Tone Extension response control (enable / disable)
uint8_t	enable	True to enable TX or RX Constant Tone Extension, False to disable

Response:

GAPC_CMP_EVT: When operation completed.

Description:

Command used to control constant tone extension reception.

5.12.5 GAPC_CTE_IQ_REPORT_IND

Parameters:

Type	Parameters	Description
uint8_t	rx_phy	Rx PHY (see Table 11)
uint8_t	data_channel_idx	Data channel index
int16_t	rssi	RSSI (in 0.1 dBm)
uint8_t	rssi_antenna_id	RSSI antenna ID
uint8_t	cte_type	CTE type (0: AOA | 1: AOD-1us | 2: AOD-2us) (see Table 14)
uint8_t	slot_dur	Slot durations (1: 1us | 2: 2us)
uint8_t	pkt_status	Packet status
uint16_t	con_evt_cnt	Connection event counter
uint8_t	nb_samples	Number of samples
struct gap_iq_sample [nb_samples]	sample	Array of I/Q sample (see Table 24)

Response:

None

Description:

Indicate reception of I/Q Report event over a BLE connection.

5.13 LE Credit Based Connection (aka LE Credit Oriented Channel)

This feature is no more managed in GAPC but in L2Cap controller task (see [7]).

Old API is deprecated and cannot be used anymore.

New message mapping is the following one:

Old Message	New Message	Task managing message
GAPC_LE_CREDIT_CON_CREATE_CMD	GAPM_LEPSM_REGISTER_CMD	GAPM task (see 4.8.1)
GAPC_LE_CREDIT_CON_DESTROY_CMD	GAPM_LEPSM_UNREGISTER_CMD	GAPM task (see 4.8.2)
GAPC_LE_CREDIT_CON_CONNECT_CMD	L2CC_LECB_CONNECT_CMD	L2CC task (see [7]).
GAPC_LE_CREDIT_CON_CONNECT_REQ_IND	L2CC_LECB_CONNECT_REQ_IND	L2CC task (see [7]).
GAPC_LE_CREDIT_CON_CONNECT_CFM	L2CC_LECB_CONNECT_CFM	L2CC task (see [7]).
GAPC_LE_CREDIT_CON_CONNECT_IND	L2CC_LECB_CONNECT_IND	L2CC task (see [7]).
GAPC_LE_CREDIT_DISCONNECT_CMD	L2CC_LECB_DISCONNECT_CMD	L2CC task (see [7]).
GAPC_LE_CREDIT_DISCONNECT_IND	L2CC_LECB_DISCONNECT_IND	L2CC task (see [7]).
GAPC_LE_CREDIT_CON_ADD_CMD	L2CC_LECB_ADD_CMD	L2CC task (see [7]).
GAPC_LE_CREDIT_CON_ADD_IND	L2CC_LECB_ADD_IND	L2CC task (see [7]).
L2CC_SEND_REQ	L2CC_LECB_SDU_SEND_CMD	L2CC task (see [7]).
L2CC_SEND_RSP	L2CC_CMP_EVT	L2CC task (see [7]).
L2CC_LECNX_DATA_RECV_IND	L2CC_LECB_SDU_RECV_IND	L2CC task (see [7]).

References

[1]	**Title**	Specification of the Bluetooth System		
	Reference	Bluetooth Specification		
	Version	5.1	**Date**	
	Source	Bluetooth SIG		

[2]	**Title**	RW-BLE-SW-HOST-FS		
	Reference	RW-BLE Host Functional Specification		
	Version	10.00	**Date**	
	Source	RivieraWaves SAS		

[3]	**Title**	RW-BLE-SW-IS		
	Reference	Interface Specification of RW-BLE Link Layer		
	Version	10.00	**Date**	
	Source	RivieraWaves SAS		

[4]	**Title**	RW-BLE-HOST-ERR-CODE-IS		
	Reference	RW BLE Host Error Code Interface Specification		
	Version	10.00	**Date**	
	Source	RivieraWaves SAS		

[5]	**Title**	org.bluetooth.characteristic.gap.appearance		
	Reference	Bluetooth appearance field description		
	Version	N/A	**Date**	N/A
	Source	http://developer.bluetooth.org/gatt/characteristics/Pages/CharacteristicViewer.aspx?u=org.bluetooth.characteristic.gap.appearance.xml		

[6]	**Title**	AD Type		
	Reference	EIR Data Type and Advertising Data Type (AD Type) Values		
	Version	N/A	**Date**	N/A
	Source	https://www.bluetooth.org/en-us/specification/assigned-numbers-overview/generic-access-profile		

[7]	**Title**	RW-BLE-L2C-IS		
	Reference	L2CAP Interface Specification		
	Version	10.00	**Date**	
	Source	RivieraWaves SAS		