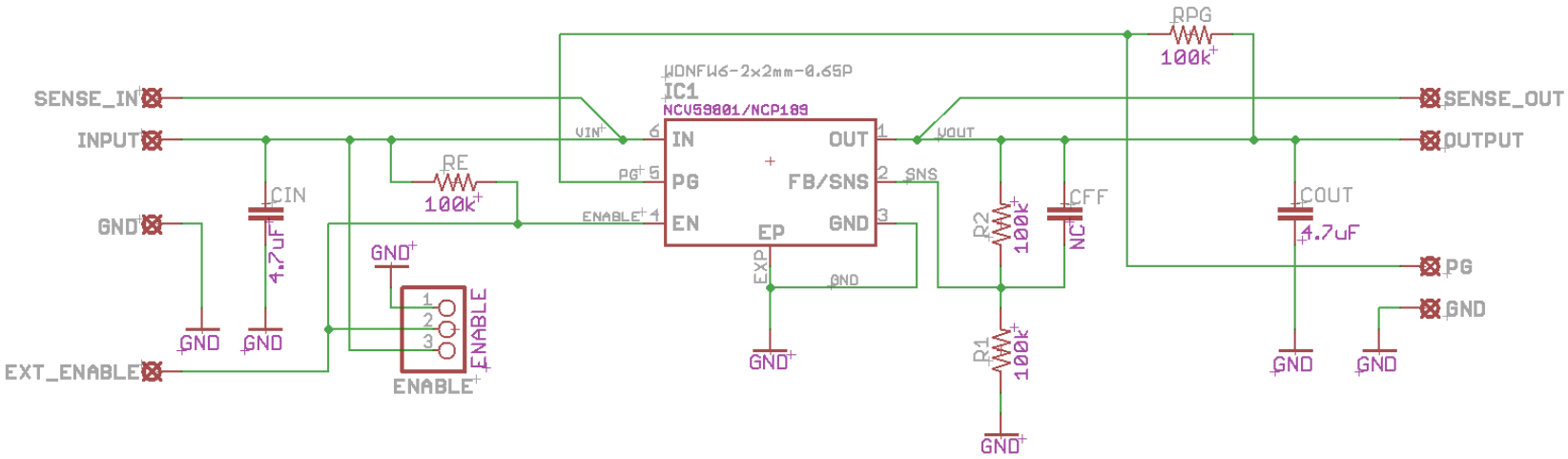Schematic for the NCV8189CMTW180TAGEVB LDO Demo Board