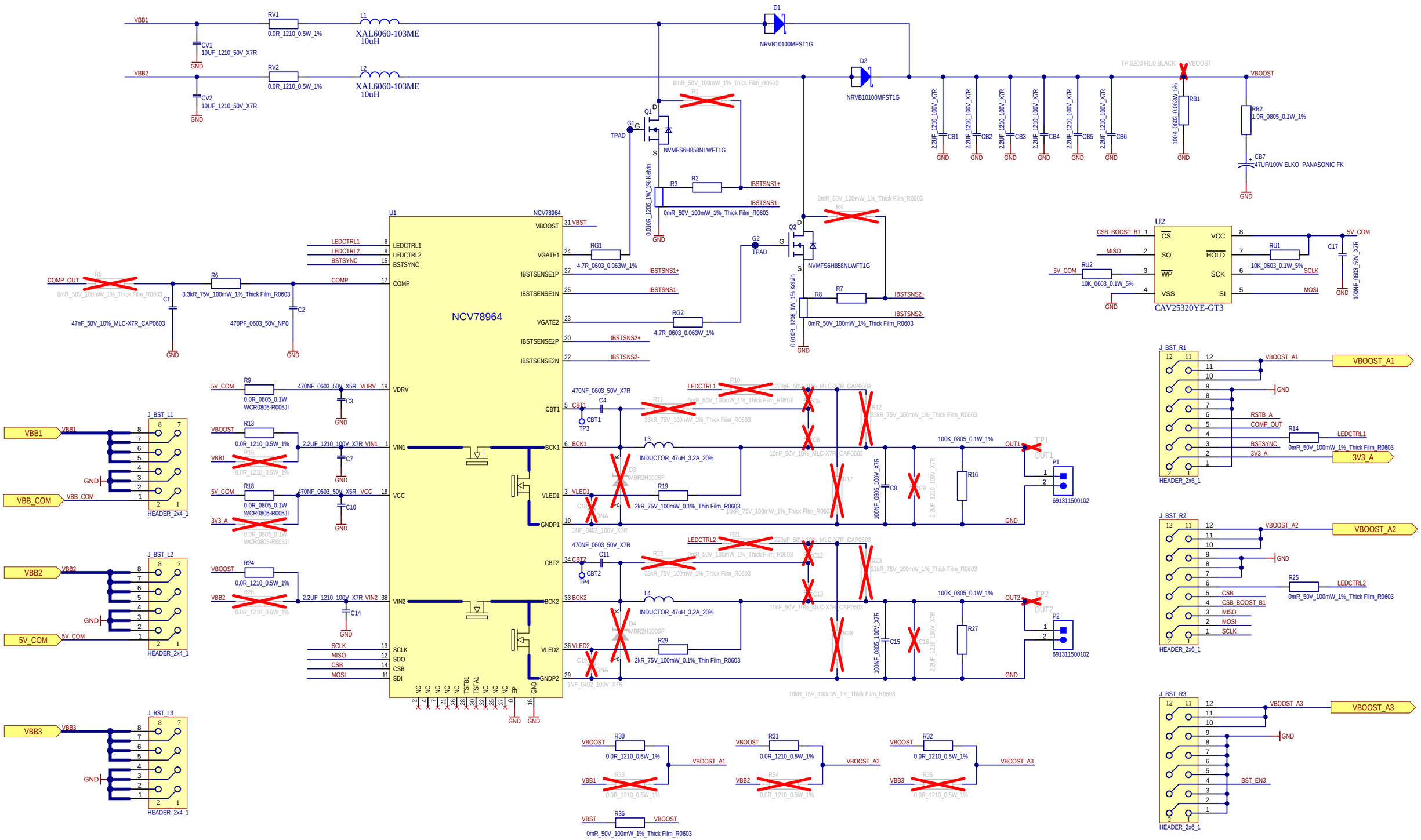

onsemi
Automotive Product Division
Videnska 204/125 619 00 Brno Czech Republic

PROJECT	NCV78964_DB_V1.2
SCHEMATIC	DB_NCV78964_v1.2.SchDoc
CUSTOMER	onsemi
AUTHOR	Jiri DANIEL

Size	REV.	SHEET No.	TOTAL SHEETS	TIMESTAMP	
A3	A	1	1	22/01/2024	10:17:42

1.1C