LED DRIVER NCV78902 - 2 phase SEPIC

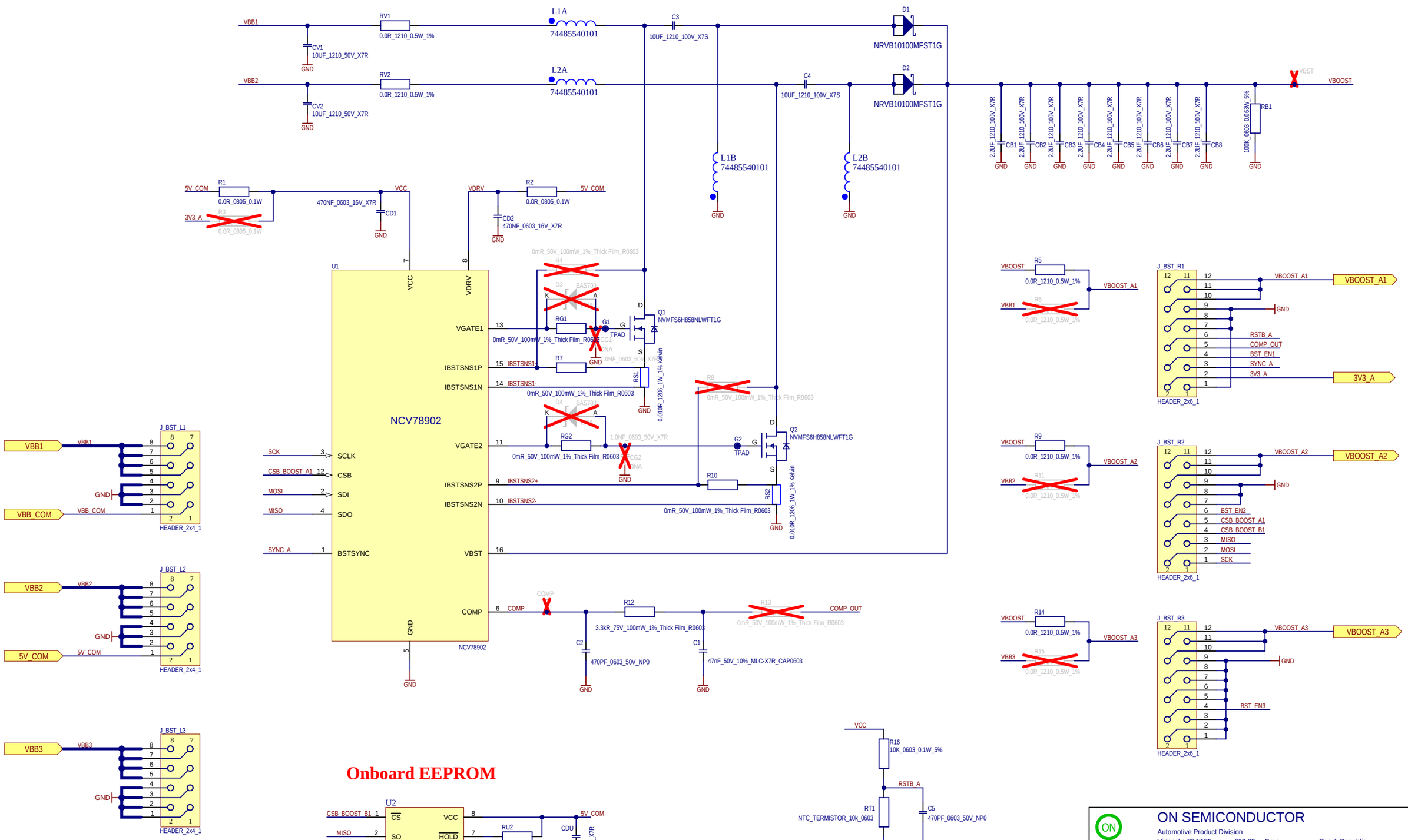

ON SEMICONDUCTOR Automotive Product Division Videnska 204/125 619 00 Brno Czech Republic				
PROJECT	DB_NCV78902_v1.0			
SCHEMATIC	DB_NCV78902_SEPIC_v1.0.SchDoc			
CUSTOMER	ON Semiconductor		AUTHOR	Jiri DANIEL
Size	REV.	SHEET No.	TOTAL SHEETS	TIMESTAMP
A3	A	0	0	01/04/2025 12:36:05

1.1C