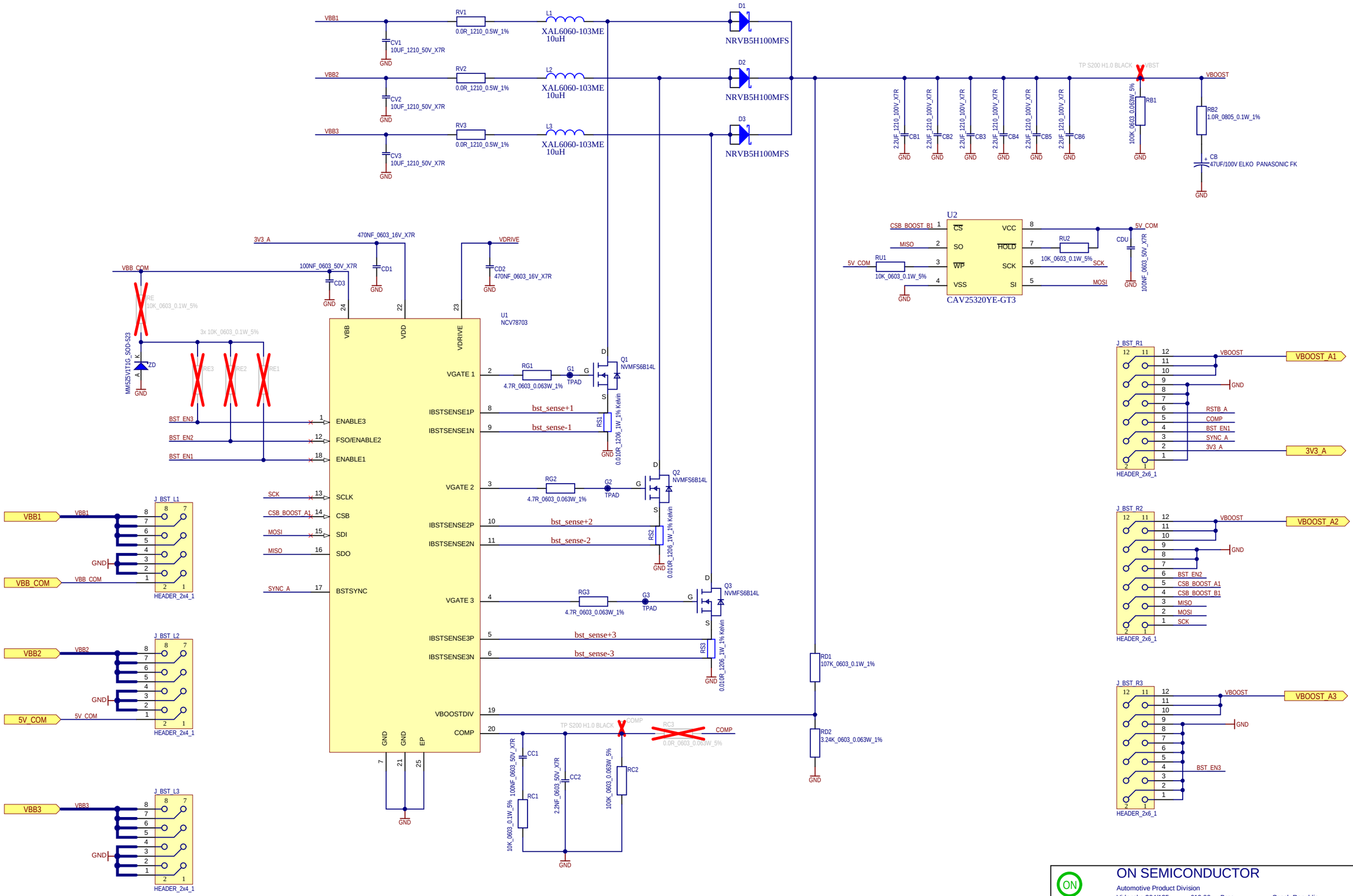

ON SEMICONDUCTOR
Automotive Product Division
Videnska 204/125 619 00 Brno Czech Republic

PROJECT	NCV7870x_DB_V1.1
SCHEMATIC	DB_NCV78702-3_v1.1.SchDoc
CUSTOMER	ON Semiconductor
AUTHOR	Jiri DANIEL

Size	REV.	SHEET No.	TOTAL SHEETS	TIMESTAMP	
A3	A	0	0	11/13/2017	1:10:26 PM

1.1C