TURN

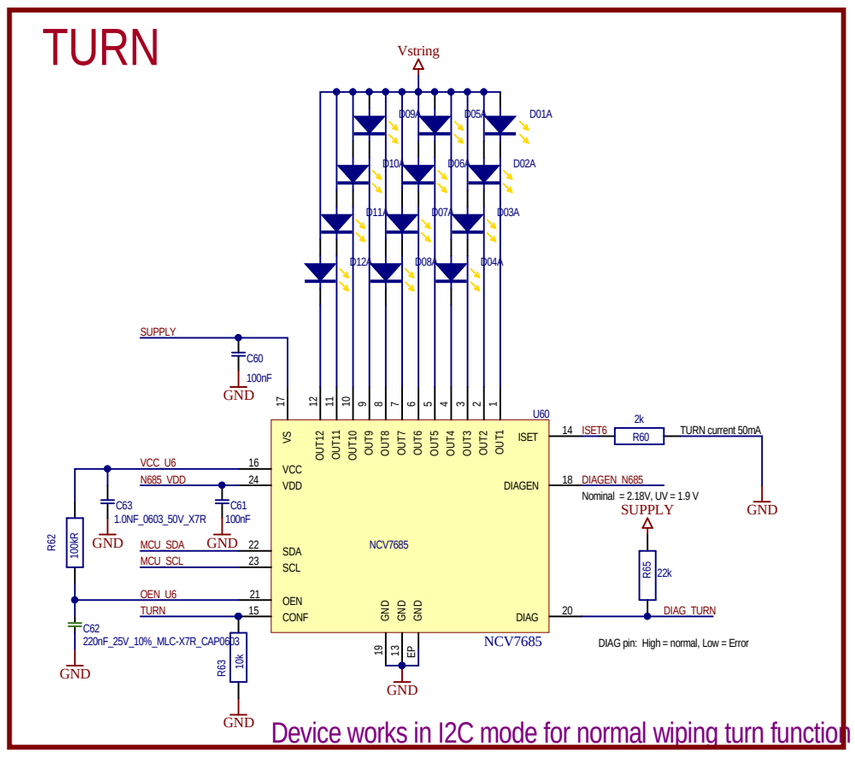

Device works in I2C mode for normal wiping turn function

REVERSE

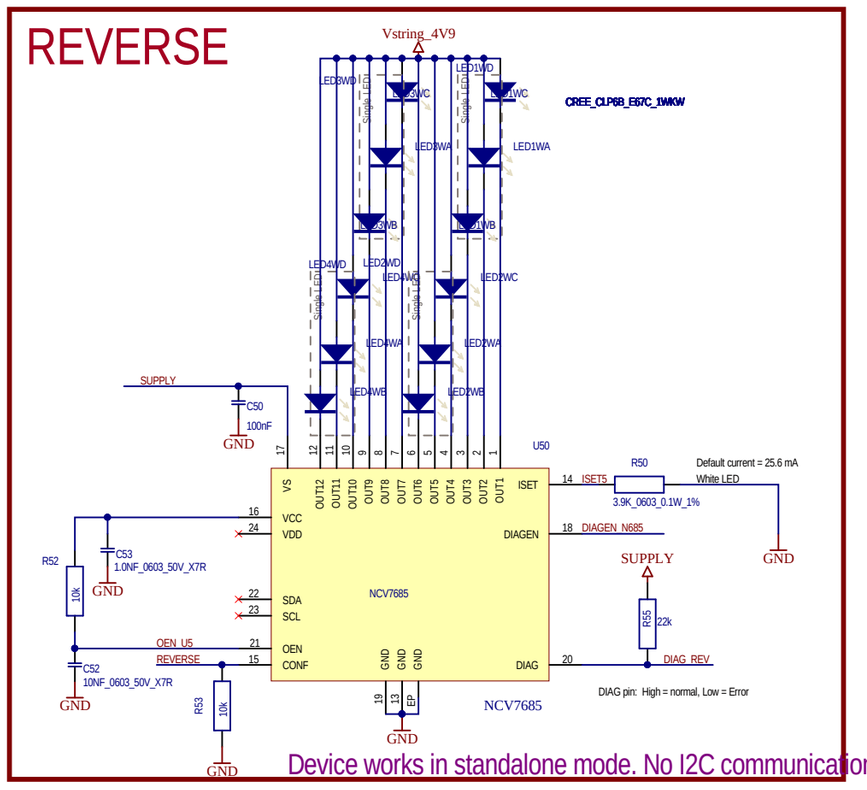

Device works in standalone mode. No I2C communication

Connectors

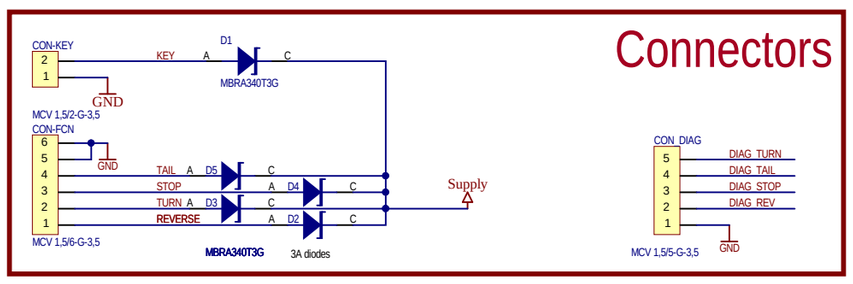

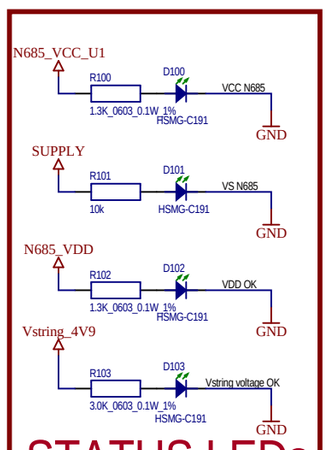

STATUS LEDs

LDO

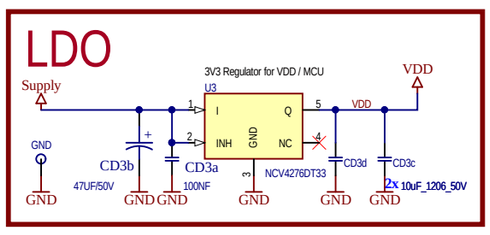

Vf LEDs (typ) RED	=	1.93V *2	= 3.9V	Vstring_4V9
Vf LEDs (typ) YELLOW	=	2.15V	VSTRING	
Vf LEDs (typ) WHITE	=	3.30V	Vstring_4V9	
VDCDC (Normal)	=	4.9V		
Vf bDiode(typ)	=	0.35V max 0.5V min 0.3V		
VSTR	=	3.5V		
Vdrop RED	=	4.9-3.9V = 1.0 V		
Vdrop Yellow	=	1.35 V		
Vdrop White	=	1.6 V		

DIAGEN threshold: 4.17 - 4.4 - 4.62V from VSTRING
OEN >0.5V for typ. DIAGEN threshold

Input activation signals

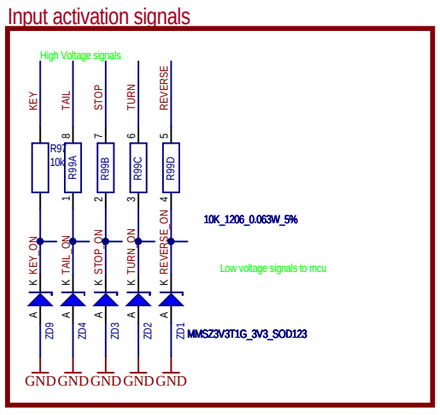

Reset circuit

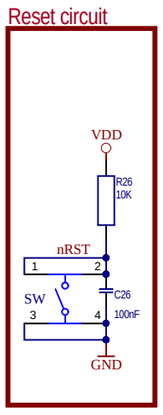

DIAGNOSTIC sense by MCU

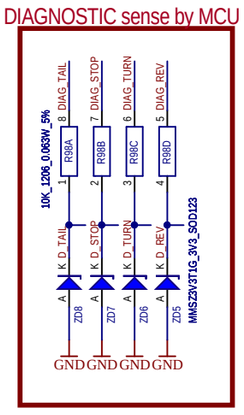

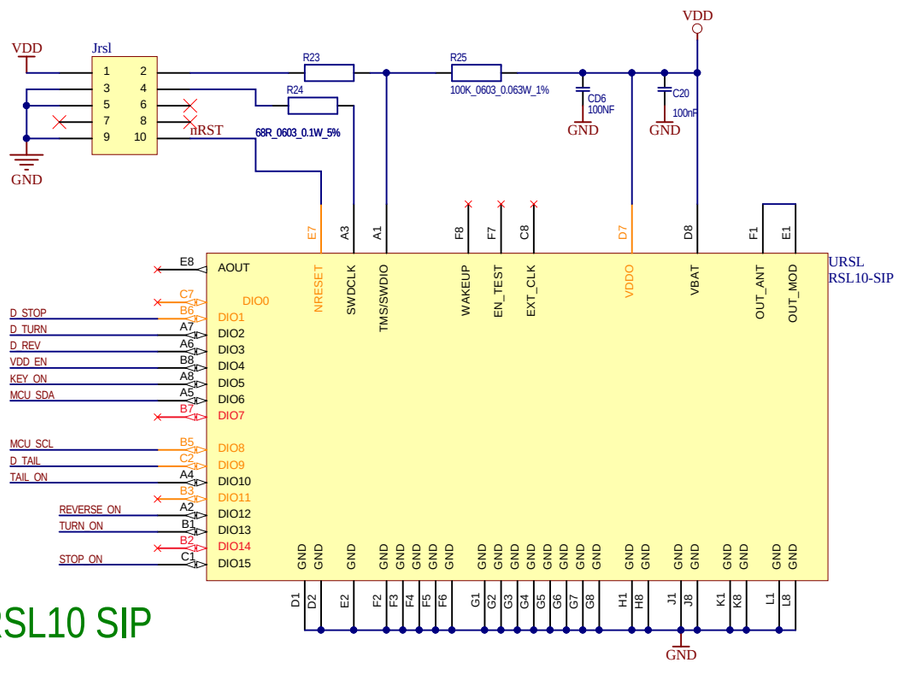

RSL10 SIP

TAIL

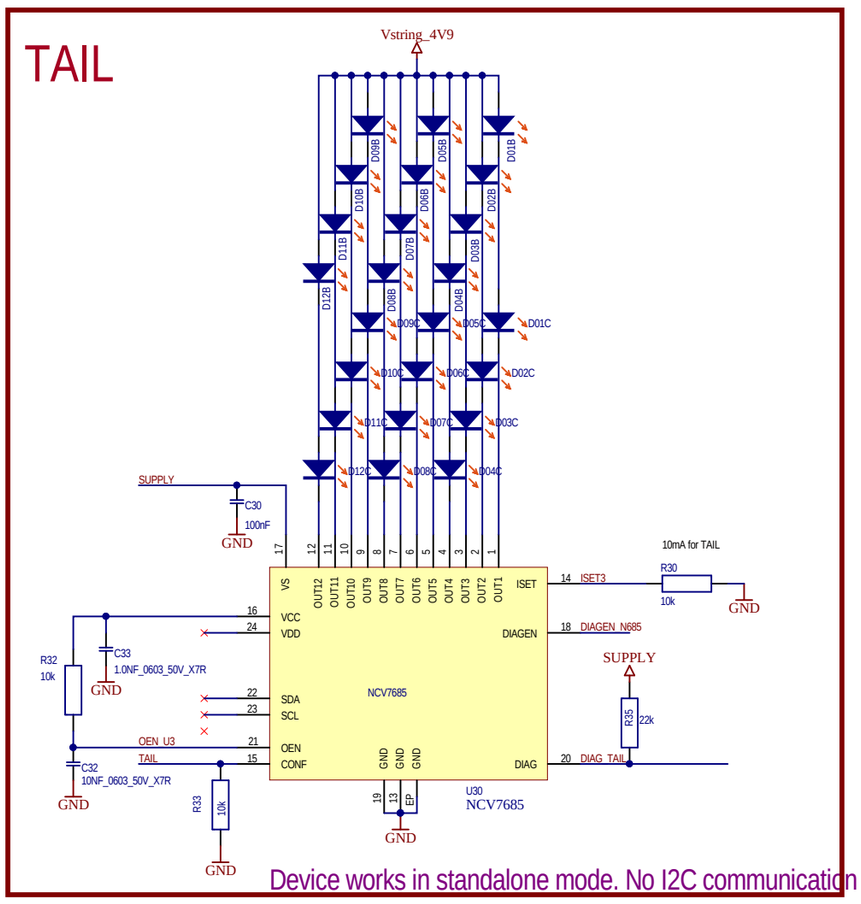

Device works in standalone mode. No I2C communication

STOP

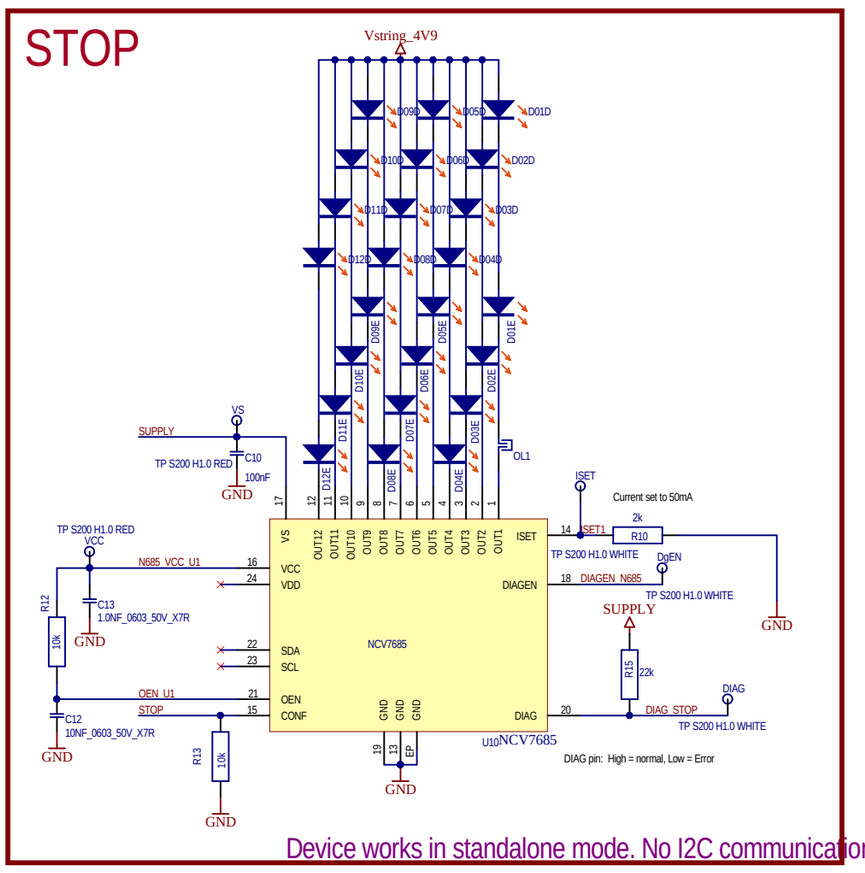

Device works in standalone mode. No I2C communication

DC/DC converter

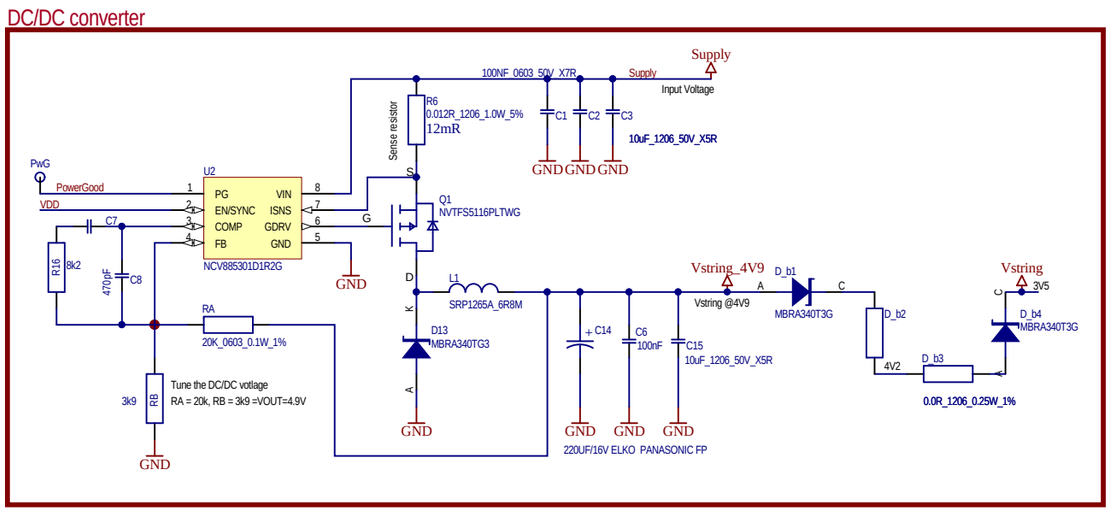

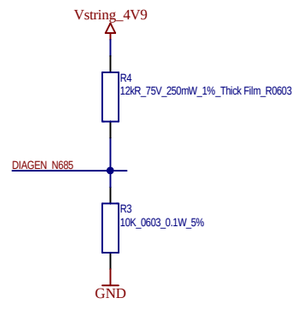

VDD disconnecting circuit for FS mode

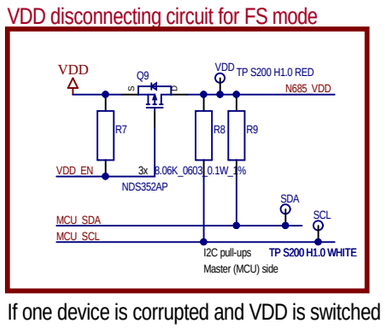

If one device is corrupted and VDD is switched off,
it will corrupt whole I2C bus due to ESD diodes on the SDA,SCL pins

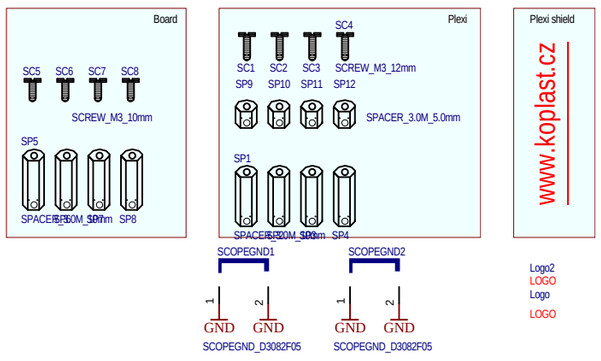

ON SEMICONDUCTOR <Edit Project Parameters - Organization> Videnska 125 619 00 Brno Czech Republic				
PROJECT	NCV7685_EVB_V3-HighEnd			
SCHEMATIC	NCV7685_EVB_V3-MID.SchDoc			
CUSTOMER	<Customer>		AUTHOR	L.Bazant
Size A3	REV. A	SHEET No. 1	TOTAL SHEETS 3	TIMESTAMP 30-Apr-21 16:36:00

1.0C