ON Semiconductor®
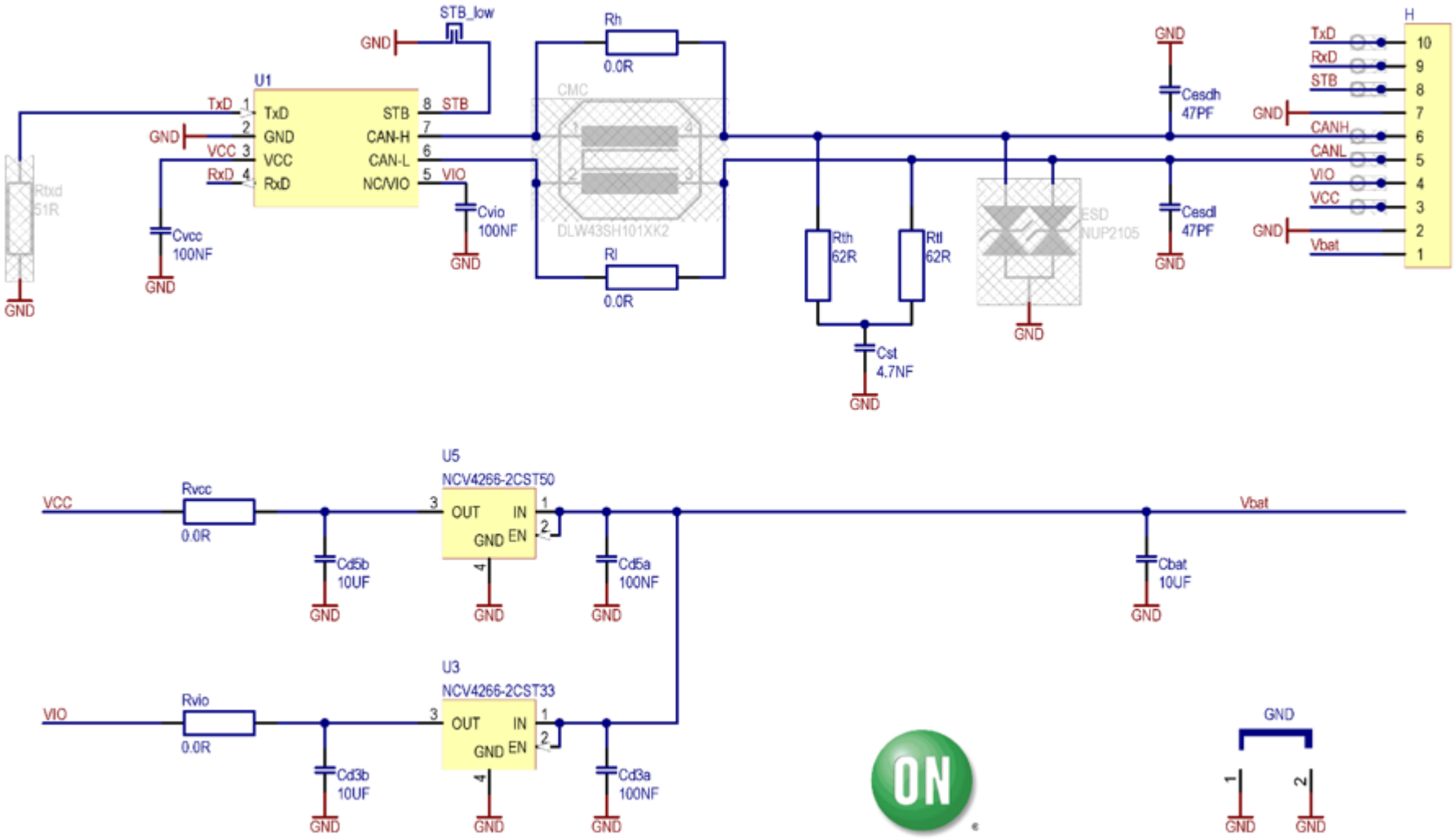
# Schematic for the NCV7344A3V1GEVB Evaluation Board