ON Semiconductor
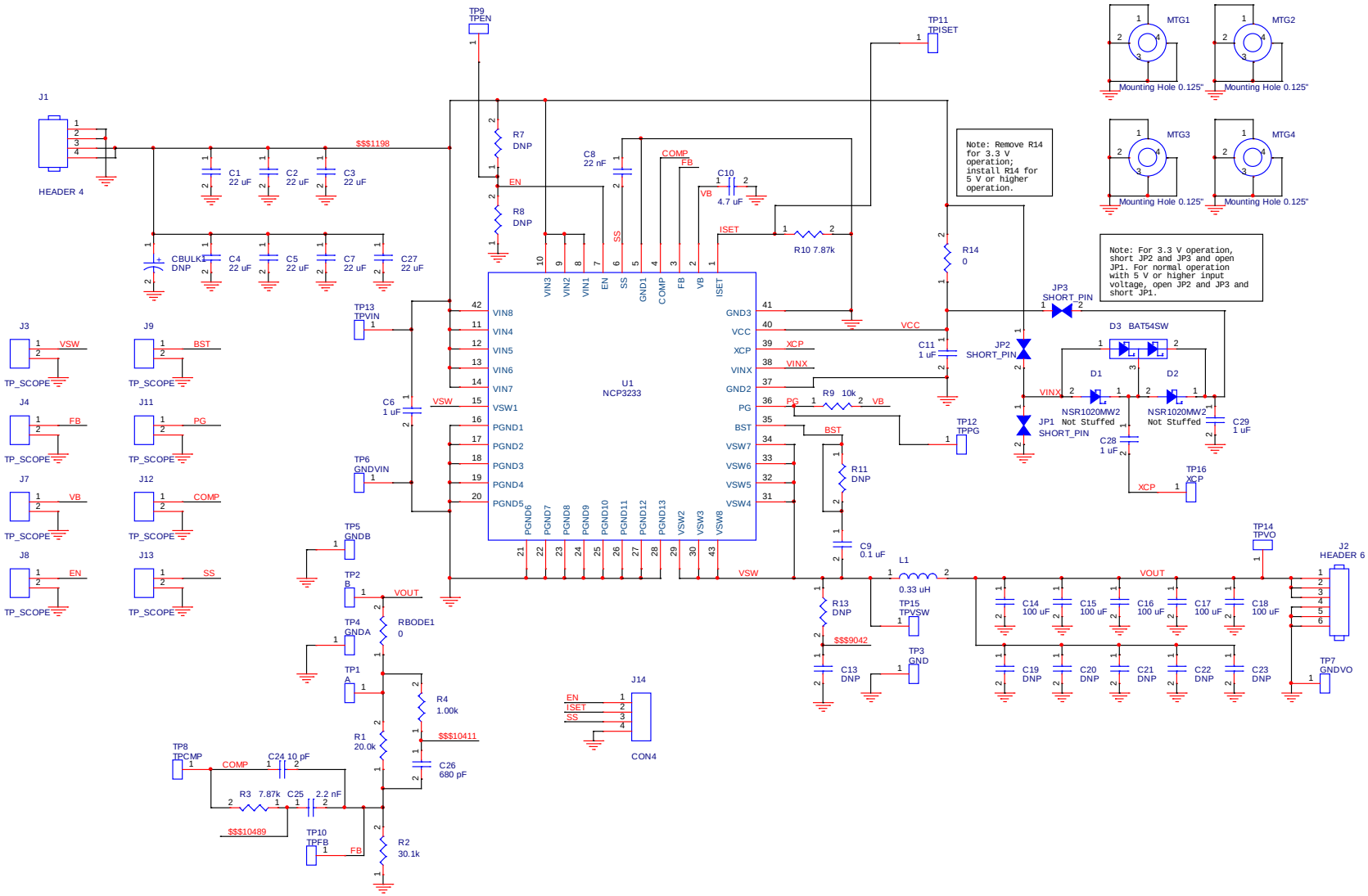
Schematic for the NCP3233GEVB Evaluation Board