ON Semiconductor
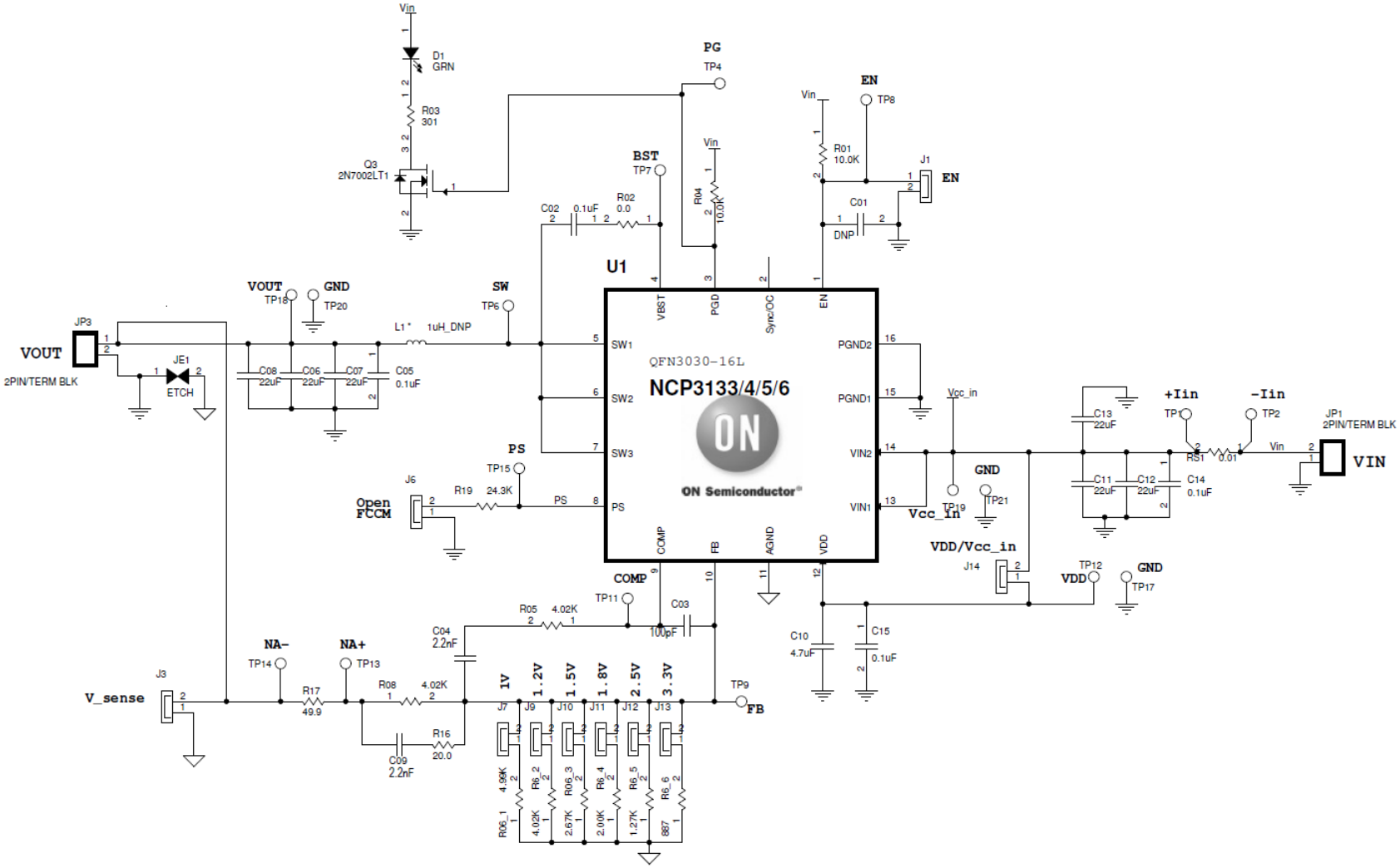
Schematic for the NCP3135GEVB Evaluation Board