ON Semiconductor®

Schematic for the FUSB301GEVB Evaluation Board

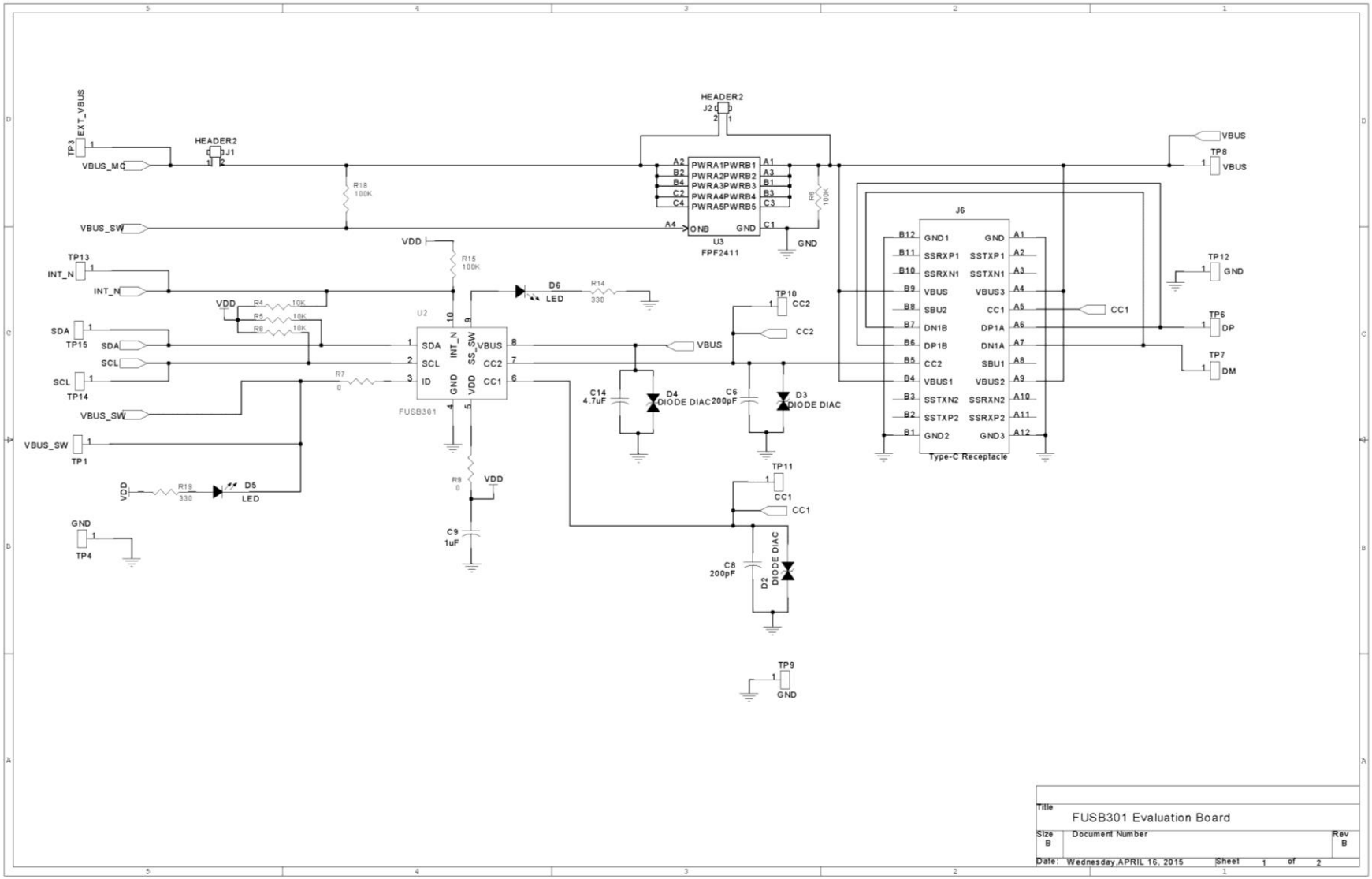

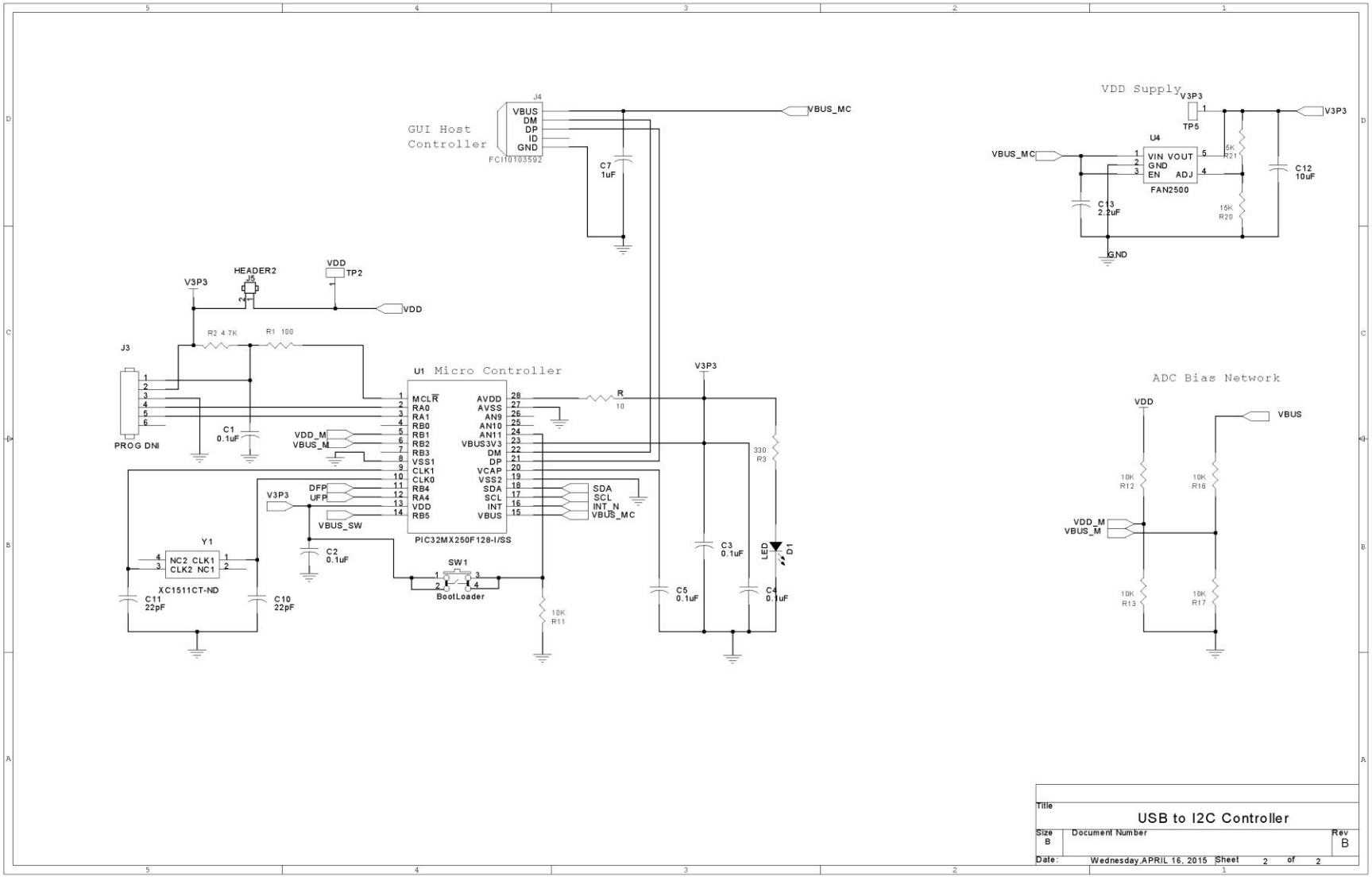
GUI Host Controller
J4
VBUS
DM
DP
ID
GND
FCI10103592
VBUS_MC
C7 1uF
VDD Supply
V3P3
TP5
U4
VIN VOUT
GND
EN ADJ
FAN2500
5K R21
15K R20
C12 10uF
C13 2.2uF
GND
HEADER2
J5
VDD
TP2
R2 4.7K
R1 100
J3
PROG DNI
C1 0.1uF
U1 Micro Controller
MCLR
RA0
RA1
RB0
RB1
RB2
RB3
VSS1
CLK1
CLK0
RB4
RA4
VDD
RB5
AVDD
AVSS
AN9
AN10
AN11
VBUS3V3
DM
DP
VCAP
VSS2
SDA
SCL
INT
VBUS
PIC32MX250F128-I/SS
R 10
330 R3
VDD_M
VBUS_M
DFP
UFP
VBUS_SW
SDA
SCL
INT_N
VBUS_MC
C2 0.1uF
Y1
NC2 CLK1
CLK2 NC1
XC1511CT-ND
C11 22pF
C10 22pF
SW1
BootLoader
10K R11
C3 0.1uF
C5 0.1uF
C4 0.1uF
LED
D1
ADC Bias Network
VDD
VBUS
10K R12
10K R16
10K R13
10K R17
Title
USB to I2C Controller
Size B
Document Number
Rev B
Date: Wednesday,APRIL 16, 2015
Sheet 2 of 2