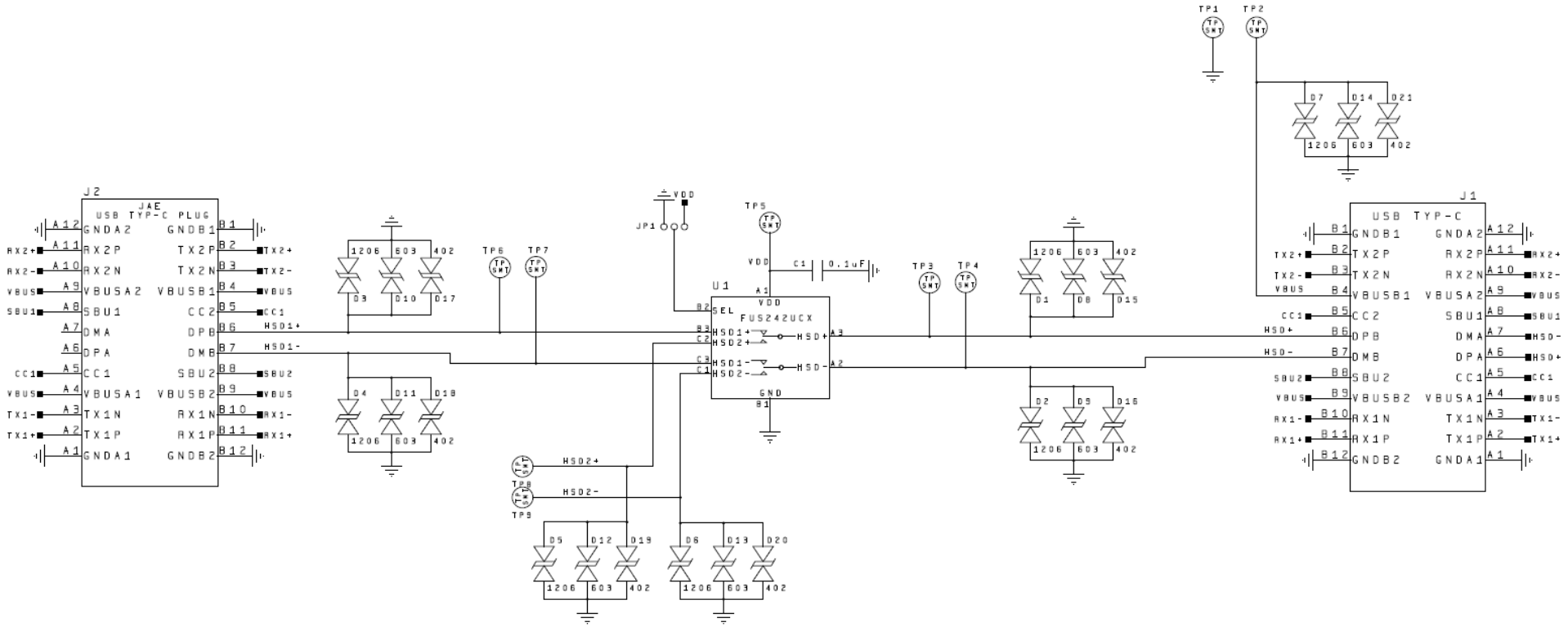# Schematic for the FSUSB242GEVB Evaluation Board