6.6 kW On Board EV Charger (SiC Model) Evaluation Board User's Manual

SEC-6D6KW-OBC-SIC-GEVB

ON Semiconductor®

www.onsemi.com

EVAL BOARD USER'S MANUAL

SPECIFICATION

Device	Application	Input Voltage	Output Power	Topology	I/O Isolation
FAN9673Q NCV4390 NCV1077P065G NCP51705MNTXG NCV57000DWR2G NVHL020N090SC1 NVHL060N090SC1 NCV890100PDR2G NCV2003SN2T1G …	On Board EV Charger	90 – 264 Vac	6.6 kW	3CH Interleave PFC + Full Bridge LLC	Yes

OTHER SPECIFICATION

	Output 1	Output 2
Output Voltage	250 – 450 Vdc	12 Vdc
Ripple	5% (Meet QCT 895 2011)	5%
Max Current	16 A	0.6 A
Min Current	0	0

PFC (Yes/No)	Yes
Typical Efficiency	94%
Inrush Limiting	48A
Operating Temp. Range	–20 – 85°C
Cooling Method	Force Air or Liquid cooling. Depend on the Heatsink
Signal Level Control	On/Off, CC, CV, Bus Voltage
Dimension	254 x 198 x 70 mm + Heatsink

© Semiconductor Components Industries, LLC, 2020

August, 2020 – Rev. 1

Publication Order Number:
EVBUM2731/D

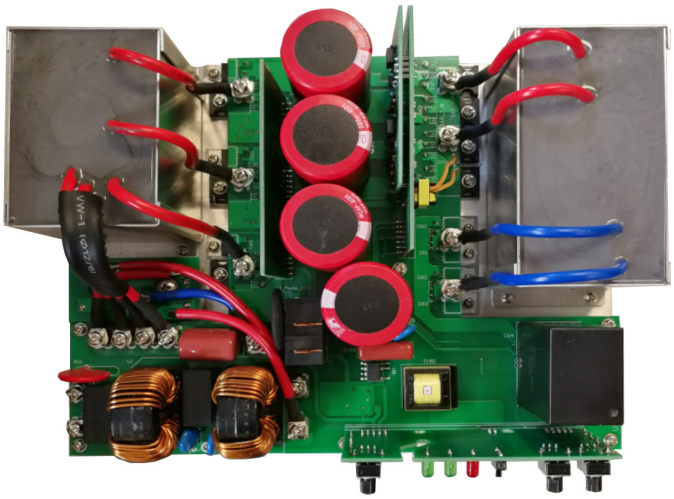

Figure 1. Evaluation Board

KEY FEATURES

Whole Solution

- 3CH Interleave PFC to get high efficiency and power density. Decrease the current ripple at mean time
- Full bridge LLC to boost efficiency by high bus voltage usage
- Hardware PFC and LLC control approach for easily designing and less malfunction.
- Full functional solution including input/output current/voltage sensing and CC/CV PWM control interface.
- Bus voltage adjustable to optima the efficiency according to the output voltage.
- Adopting SiC MOSFETs and Diodes to enhance the efficiency.

PFC Controller FAN9673

- Continuous Conduction Mode with Average Current Mode Control
- Three−Channel Interleave Operation
- Programmable Operation Frequency Range: 18 kHz~40 kHz or 55 kHz~75 kHz
- Programmable PFC Output Voltage
- Two Current−Limit Functions
- TriFault Detect™ Protects Against Feedback Loop Failure
- SAG Protection
- Programmable Soft−Start
- Under−Voltage Lockout (UVLO)
- Differential Current Sensing

LLC Controller NCV4390 (AEC Qualified Version of FAN7688)

- Secondary Side PFM Controller for LLC Resonant Converter with Synchronous Rectifier Control
- Charge Current Control for Better Transient Response and Easy Feedback Loop Design
- Adaptive Synchronous Rectification Control with Dual Edge Tracking
- Closed Loop Soft−Start for Monotonic Rising Output
- Wide Operating Frequency (39 kHz~690 kHz)
- Green Functions to Improve Light−Load Efficiency
- Symmetric PWM Control at Light−Load to Limit the Switching Frequency while Reducing Switching Losses
- Protection Functions (with Auto−Restart)
  - Over−Current Protection (OCP)
  - Output Short Protection (OSP)
  - NON Zero−Voltage Switching Prevention (NZS) by Compensation Cutback (Frequency Shift)
  - Power Limit by Compensation Cutback (Frequency Shift)
  - Overload Protection (OLP) with Programmable Shutdown Delay Time
- Over−Temperature Protection (OTP)
- Programmable Dead Times for Primary Side Switches and Secondary Side Synchronous Rectifiers
- VDD Under−Voltage Lockout (UVLO)
- Wide Operating Temperature Range −40°C to +125°C
- Automotive Qualification

SCHEMATICS AND CIRCUIT DESCRIPTION

The system diagram is on Figure 2. The key elements of the OBC are marked in the color blocks.

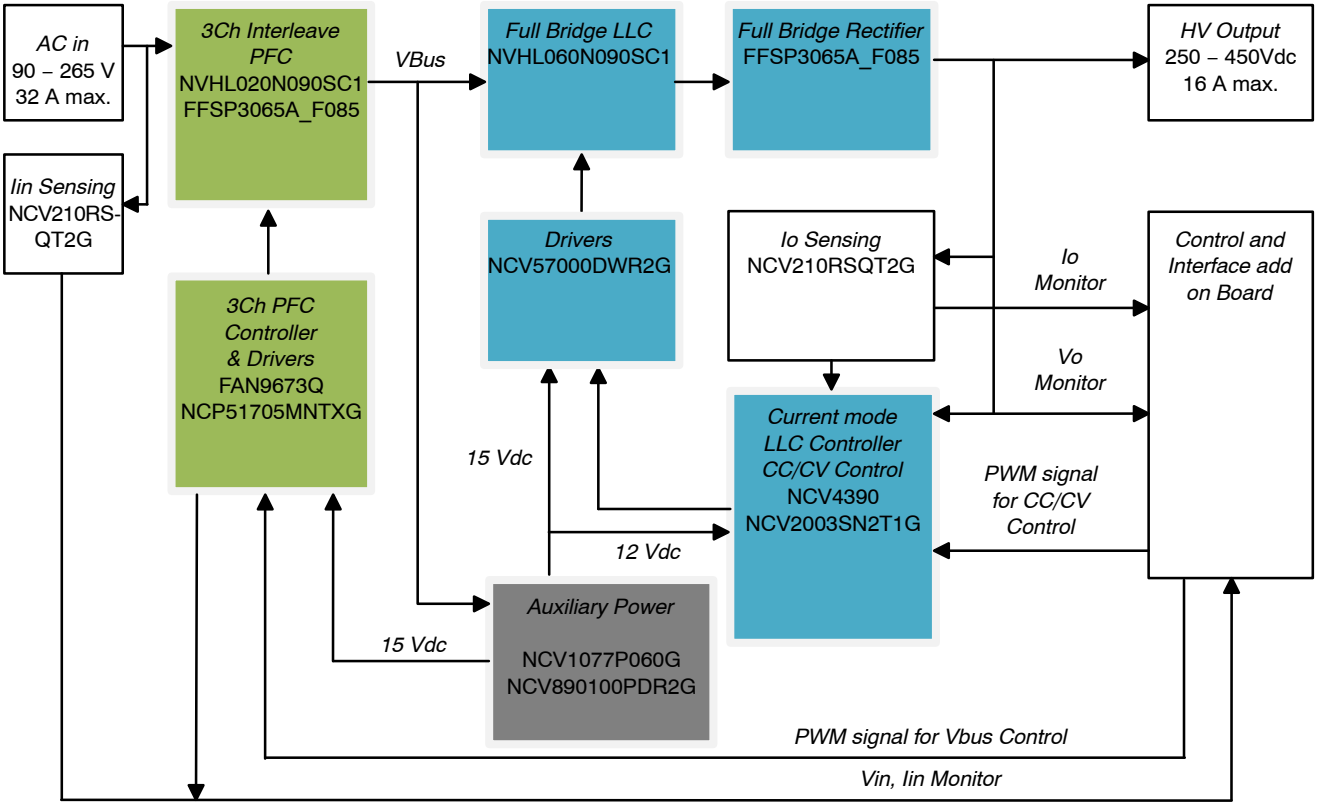

Figure 2. System Diagram of the 6.6 kW OBC

Following the AC input is the PFC stage. The key elements of the PFC stage are the controller FAN9673 and the triple boost power devices. The triple boost power devices schematic is shown in figure 3. The PFC inductors L20, L30, L40 were used to connect L20 and L20C, L30 and L30C, L40 and L40C. Two rectifier bridges in parallel were used to connect AC1, AC2, REC+ and REC−.

The FAN9673 circuit is showed in figure 4. More details of the FAN9673 please refer the datasheet and the application notes of the device on the web site https://www.onsemi.com/PowerSolutions/product.do?id=FAN9673.

The bus voltage is adjustable by the duty of the PWM signal BSPWM. This function allowed the system designer optimize the system efficiency according to the input and output condition. The adjusting range is: When duty is changed from 0% to 100%, the Vbus will be changed from 210.83 to 412.45 Vdc.

The ON/OFF of PFC is controlled by the PFCEN signal. When PFC is OK, the PFC enabled the LLC stage by the RDY signal. So we used the PFCEN and RDY signal to realize the Power ON timing control.

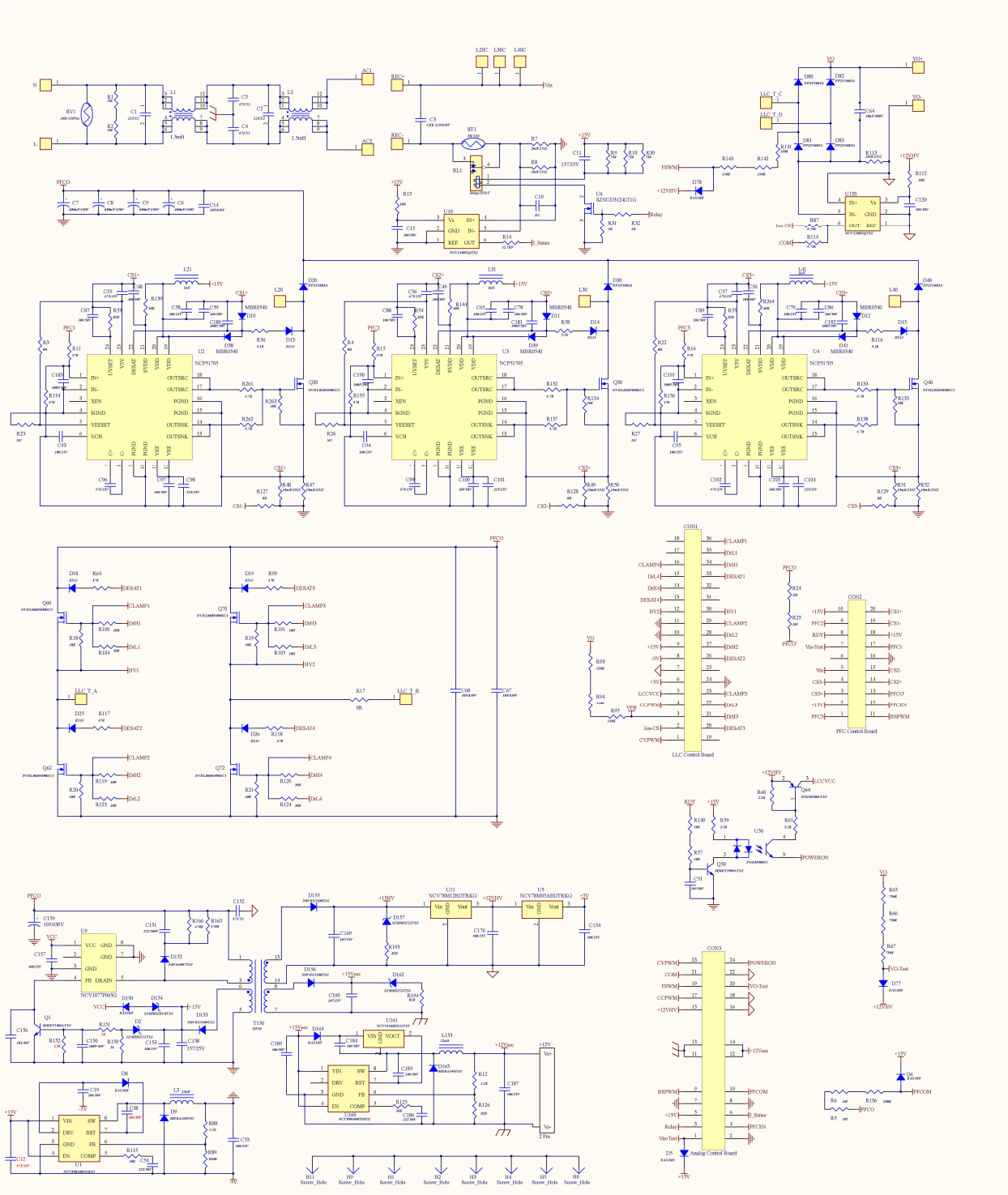

Figure 3. Schematic of the Main Board

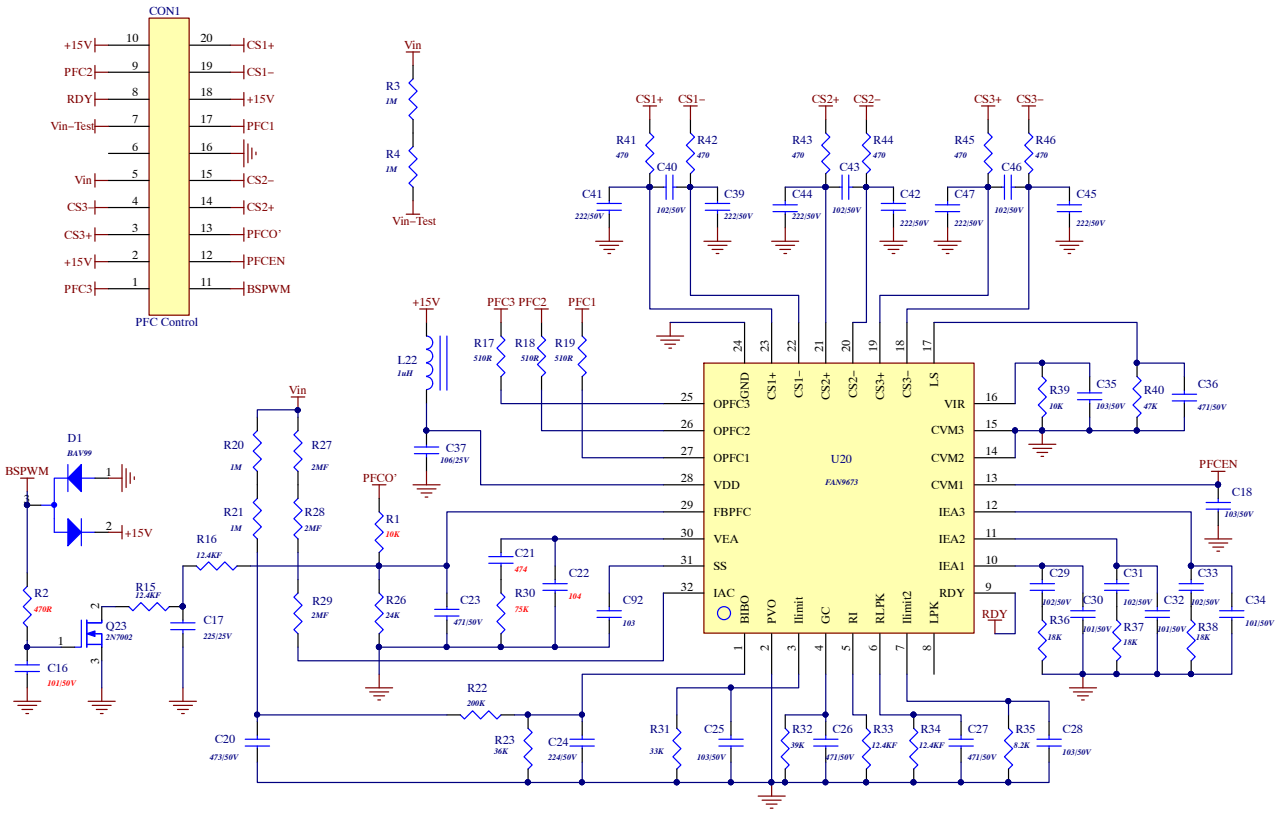

Figure 4. Schematic of the PFC Control Board

The connector CON1 connects the PFC stage to the main board. The table 1 shows the signals.

Table 1. SIGNALS OF THE CON1 ON THE PFC CONTROL BOARD

Pin No.	Direction	Description
1	PFC3	The channel 3 driver
2	+15V	The Power Supply for the FAN9673
3	CS3+	The positive current signal of channel 3
4	CS3−	The GND of the current signal of channel 3
5	Vin	The rectified voltage signal from the AC input
6	−	
7	Vin−Test	The Voltage signal for testing the Vin
8	RDY	The signal to enable the LLC
9	PFC2	The channel 2 driver
11	BSPWM	The PWM Signal to control the Vbus Voltage from the analog control board
12	PFCEN	The PFC Enable signal from the analog control board
13	PFCO'	The Vbus Voltage signal
14	CS2+	The positive current signal of channel 2
15	CS2−	The GND of the current signal of channel 2
16	GND	The GND of the PFC control board
17	PFC1	The channel 1 driver
18	+15V	The Power Supply for the FAN9673
19	CS1−	The GND of the current signal of channel 2
20	CS1+	The positive current signal of channel 2

Another key element of the OBC is the DC/DC stage. It is marked in blue in figure 2. The schematic of the DCDC stage is shown in figure 5. We adopt the single full bridge LLC topology to get the high efficiency and reasonable cost. It's composed by U60 and Q60, Q62, Q70, Q72 etc. The NCV4390 (U60) is a current mode advanced LLC controller. It is a pin to pin compatible device of the FAN7688. If you cannot find the device on the website, you can refer the description of FAN7688. More details of the part please refer the datasheet and the application notes. Because of the high output voltage (250 – 450 Vdc), the Synchronous Rectifier cannot help too much on the rectifier conduction loss. So we omitted the SR function of the NCV4390.

NCV57000 is a high−current single channel IGBT driver with internal galvanic isolation. It's used to driver the SiC MOS in the LLC Stage and the NCL30059 is used to provide the power supply for the High side drivers as shown in figure 6.

The transformer with integrated resonate inductor (please refer the datasheet of the transformer at below) and the resonate capacitor are glued on the aluminum box for better heat sink.

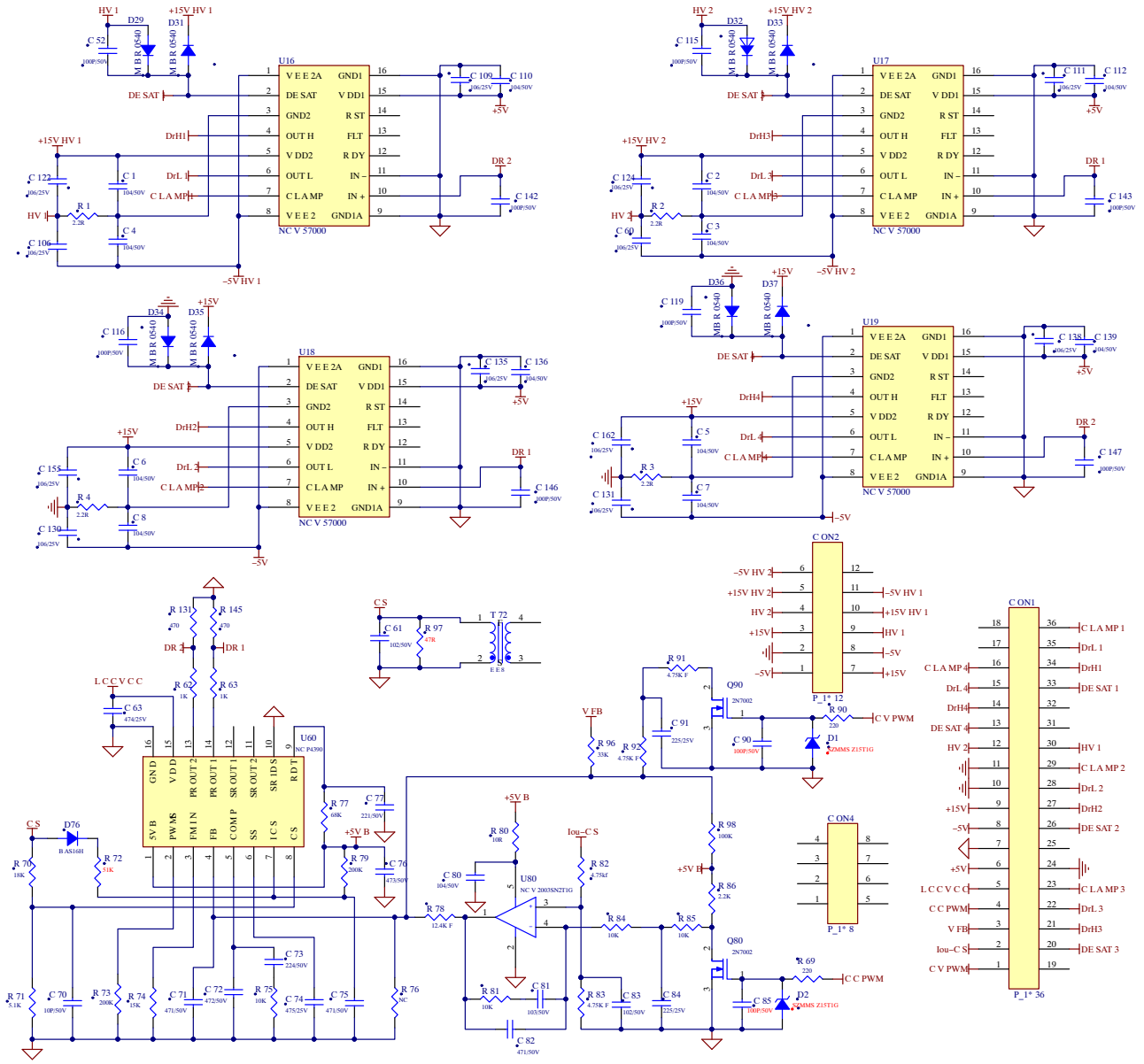

Figure 5. Schematic of the LLC Control Board

The table 2 shows the signals on the CON1 on the LLC control board.

The NCV4390 get power supply when both of the PFC RDY and the LLC enable signal are active.

Table 2. SIGNALS OF THE CON1 ON THE LLC CONTROL BOARD

Pin No.	Direction	Description
1	CVPWM	PWM signal for content voltage setting.
2	Iou−CS	Current sensing for Iout limited control
3	VFB	Output Voltage sensing for feedback control
4	CCPWM	PWM signal for constant current setting
5	LCCVCC	Power Supply for the LLC controller
6	+5V	Input side power Supply for the NCV57000
7	S_GND	Ground reference on the secondary side
8	−5V	Power Supply for the NCV57000 on the low−side
9	+15V	Output side positive power supply for the NCV57000 on the low side
10	P_GND	Ground reference on the primary side
11	P_GND	Ground reference on the primary side
12	HV2	High−side source of channel 2
13	DESAT4	Input of NCV57000 (U19) for detecting the desaturation
14	DrH4	Driver high output of NCV57000 (U19)
15	DrL4	Driver low output of NCV57000 (U19)
16	CLAMP4	Clamping output of NCV57000 (U19) for protecting MOS from parasitic turn−on
17	−−−−−	
18	−−−−−	
19	−−−−−	
20	DESAT3	Input of NCV57000 (U17) for detecting the desaturation
21	DrH3	Driver high output of NCV57000 (U17)
22	DrL3	Driver low output of NCV57000 (U17)
23	CLAMP3	Clamping output of NCV57000 (U17) for protecting MOS from parasitic turn−on
24	P_GND	Ground reference on the primary side
25	−−−−−	
26	DESAT2	Input of NCV57000 (U16) for detecting the desaturation
27	DrH2	Driver high output of NCV57000 (U16)
28	DrL2	Driver low output of NCV57000 (U16)
29	CLAMP2	Clamping output of NCV57000 (U16) for protecting MOS from parasitic turn−on
30	HV1	High−side source of channel 1
31	−−−−−	
32	−−−−−	
33	DESAT1	Input of NCV57000 (U18) for detecting the desaturation
34	DrH1	Driver high output of NCV57000 (U18)
35	DrL1	Driver low output of NCV57000 (U18)
36	CLAMP1	Clamping output of NCV57000 (U18) for protecting MOS from parasitic turn−on

We used NCL30059 to provide the power supply for the high−side driver. Figure 6 show the schematic of NCL30059 circuit.

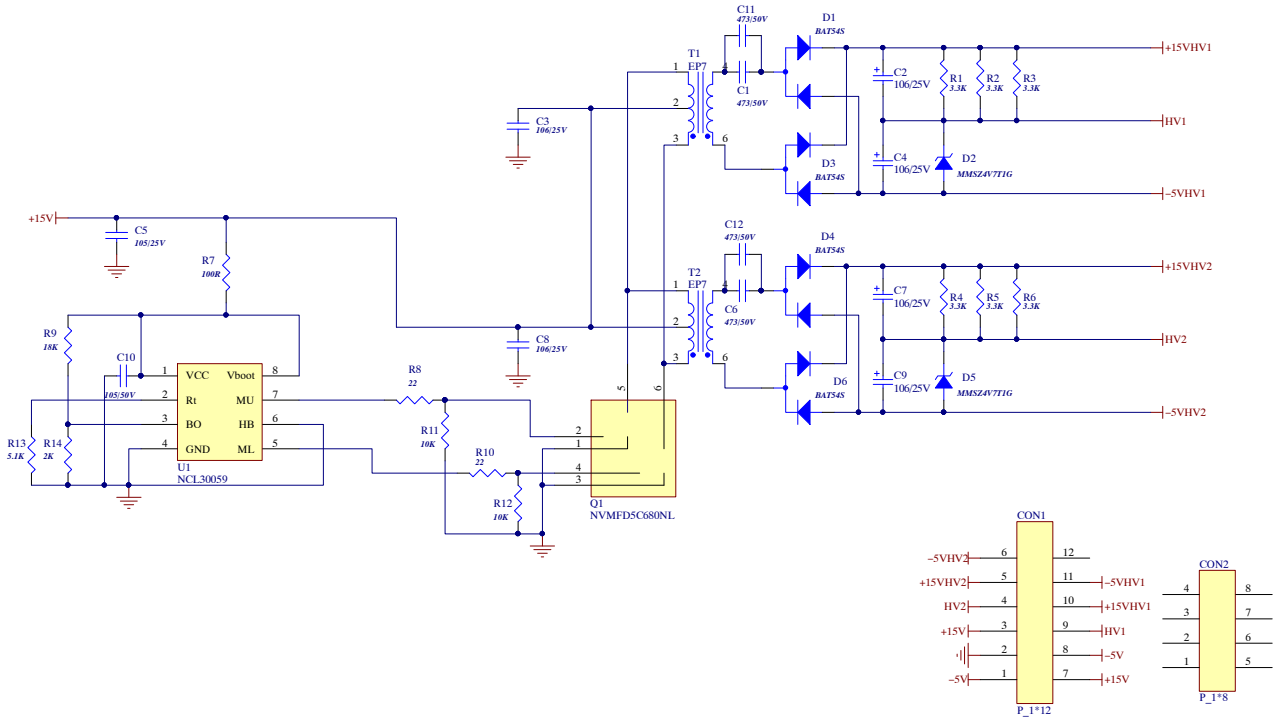

Figure 6. Schematic of the Power Supply for the LLC Control Board

We also need 2 pairs of +15 V and −5 V floating voltage on the Vcc and Vee of the high side MOSFETs gate drive. These voltages are powered by the circuits shown in Figure 6. In general, it is two channels, open loop, push−pull, series resonate DCDC converter. U1 generates the near 50% duty−cycle, alternate on/off, 133 kHz driving signals on pin 5 and pin 7. Q1 and T1 − T2 forms 2 channels parallel push−pull converter which powered by +15 V. The leakage inductance of the transformer T1 − T2 is around 15.2 μH. Together with the capacitors C1, C6, C11, C12, the resonance frequency is same with the push−pull signal. Both of the Q1 and D1, D3, D4, D6 operate on soft switching. The gain of the converter keep stable. +20V voltages output after the full bridge rectifiers. The Zener diode D2, D5 and R1 − R6 separate the +20 V to +15 V and −5 V.

The detail of the NCL30059 please refer the datasheet on the web site: https://www.onsemi.com/products/power−management/led−drivers/ac−dc−led−drivers/ncl30059.

Except the main stages of PFC and DC/DC, we also need an auxiliary power on the OBC to supply the Vcc/Vdd to the controller and driver circuits. Figure 7 shows the schematic of the auxiliary power of this reference design.

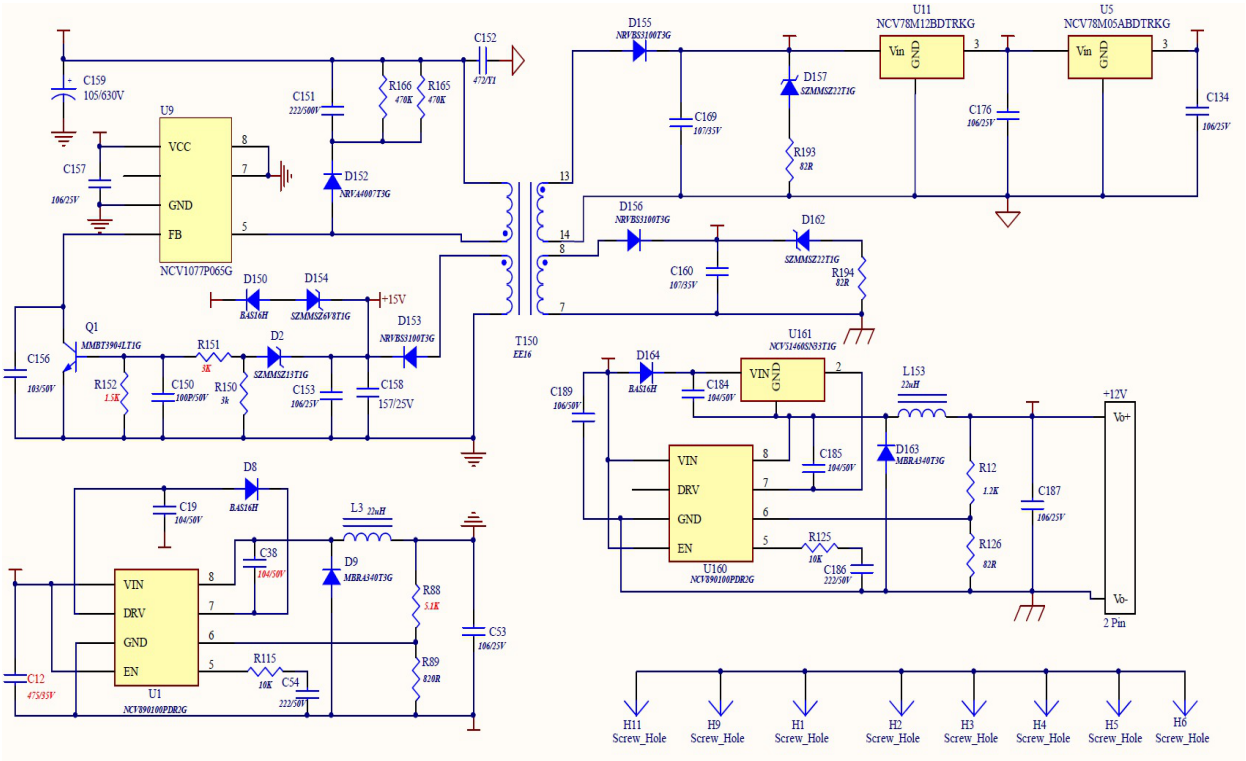

Figure 7. Schematic of the Auxiliary Power

The main topology of the auxiliary power is the fly−back which controlled by the AEC qualified Switching Regulator NCV1077P065G. The detail of the device please refer the datasheet on the web site: https://www.onsemi.com/products/power−management/ac−dc−controllers−regulators/offline−regulators/ncv1076−77.

This OBC has 3 separate GNDs. They are primary GND, Secondary GND, and HV GND. These GNDs are isolating each other. The auxiliary power supplies 3 insolating outputs according to the 3 separate GNDs. The +15 V output powers the PFC controller, PFC MOSFETs driver, LLC MOSFETs driver and the Relay; the −5 V and +5 V output power the NCV57000;

The +12Vsec powers the circuits on the control board and the off−board devices such as cooling FANs; the +12VHV power the LLC controller. The controller of the auxiliary power feedback the output of the primary side +15 V to save the optical coupler. Then the outputs of the secondary side and HV side will not be regulate due to the cross−regulation phenomena. So we inserted 2 Buck mode DCDC to the transformer outputs and the Loads. They are achieved by two pieces of NCV890100PDR2G. This device is a non−SR buck switching regulator with SO8−EP package. The switching frequency is up to 2 MHz. The performance cost ratio is high and easy for application.

In this design, we put the interface circuits on an add−on board for the flexibility. The features of the full function interface board could include the (1) Can communication with the BMS system to report the information like: Input voltage, Input current, Output voltage, Output current, Bus voltage, Output miss−connection, Temperature of the key components. (2) Can communication with the BMS to receive the following command: Power−up, Output voltage, Output current, Power off. (3) Output the CC, CV PWM signals and the power−on and relay−on signals to the main board. (4) Setting the Bus voltage according to the Vin, Vo and LLC switching frequency to get the maximum system efficiency. (5) Connect to Strata Developer Studio for evaluate the solution easily. But, the full function interface board is not ready so far. We use a simple manual control board instead of the full function one. Figure 8 show the schematic of the manual control interface board.

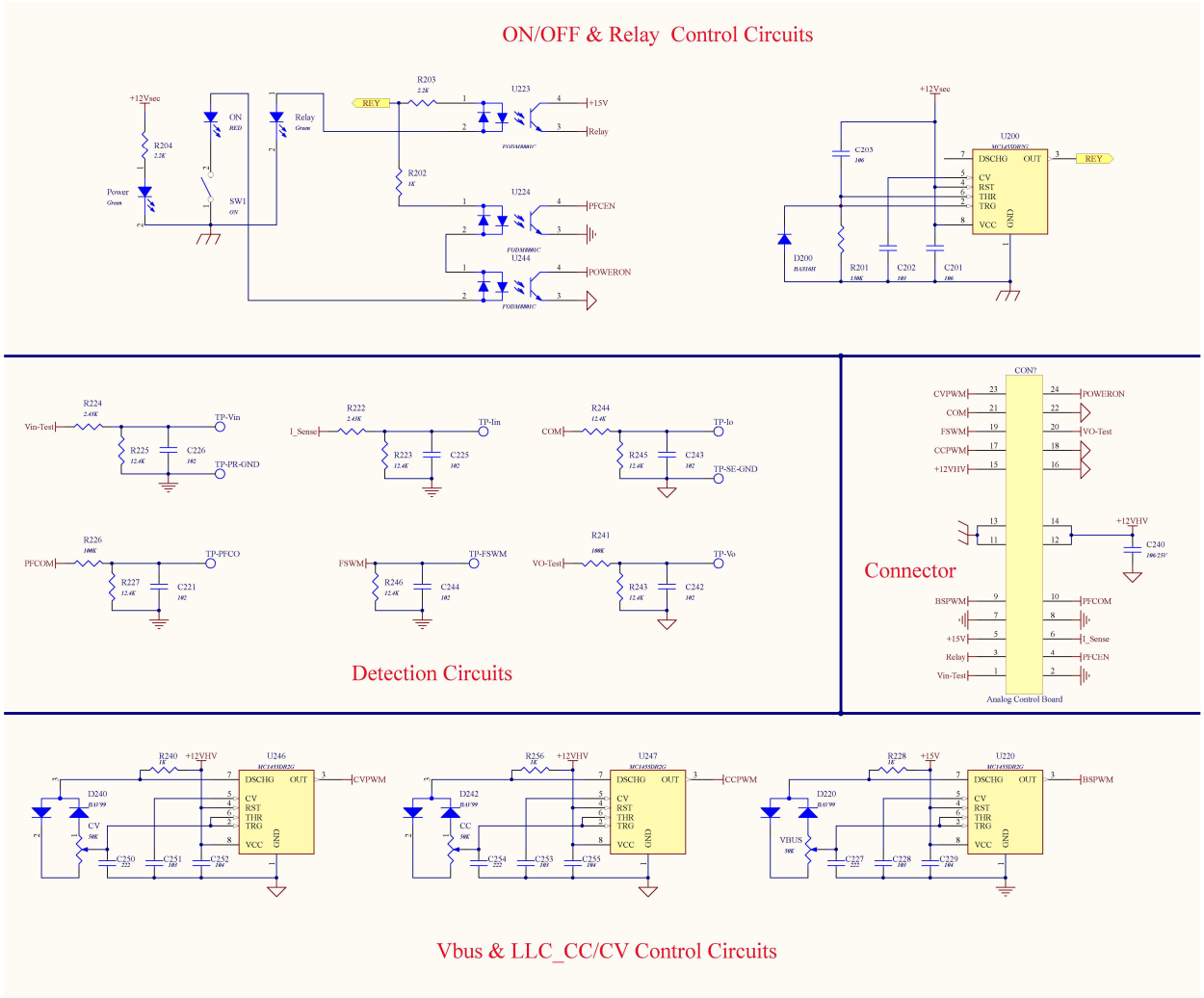

Figure 8. Schematic of the Manual Control Interface Board

The SW1 powers ON/OFF the PFC and LLC stage in the secondary side for safety. It is delivery to the primary and HV stage by U224 and U244. The Vcc of the U223 and U224 is powered by the REY signal, thus the power−up will be AND with the relay active. The REY signal is 3 second delayed by U200 from the 12 V LV active moment to guarantee the Bus Caps is full charged. The BSPWM, CC and CV PWM signals are generated by the U220, U246 and U247 and the peripherals components. The variable resistors VBUS, CC and CV control the duty of the PWM signals. The sensing signals like Vin, Iin, Vbus, Vo and Io was connected to the test points for customer testing by the voltage meter.

MEGNATICS DESIGN DATA SHEET

PFC Inductors (By Sunloard): 3 pcs. Fill in aluminum box. Monte to heat sink.

Sunlord www.sunlordinc.com

Proposal of Common Mode Choke for ARLDC805665C141N3B

Approve By	Checked By	Prepared By
Jinbo Cai	Xiang Liu	Minglei Yang
2019/7/15	2019/7/15	2019/7/15

Note: This is a preliminary proposal and the final product P/N, Structure, Shape and Dimensions, Electrical Characteristics may be changed. You are requested to confirm and approve our spec.

1.Structure and Material

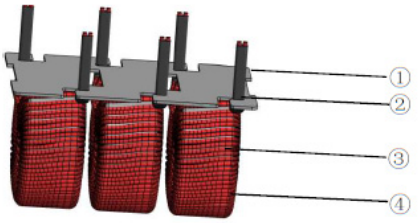

No.	Part Name	Material Name
①	Base	Phenolic
②	Glue	EPOXY
③	Wire	Polyester Enamelled Copper Wire（Φ1.6mm*2）
④	Core	Nanodust KAM158060A-AH

2. Shape and Dimensions (unit:mm)

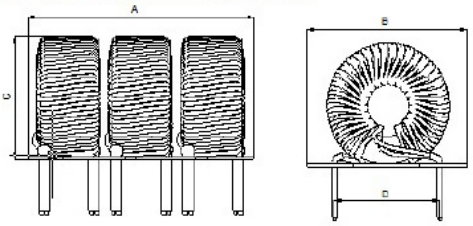

Note : For RoHS Compliant Products:
1.Solder : Sn /Ag /Cu .
2.Marking Code:B1905001 Sunlord Code.
3.Date Code: ** ** ****
① ② ③

① Year
② Week
③ Trace Code

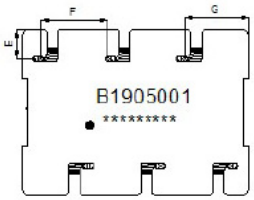

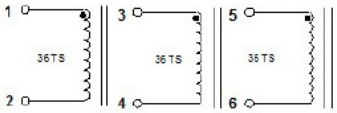

Shape and Dimensions

Item	A	B	C	D	E	F	G
Sunlord Spec.	80.0Max	56.0Max	65.0Max	38.0Ref	10.0Ref	24.0Ref	23.0Ref

3. Electrical Characteristics (Operating Temperature: - 40℃ to + 125℃)

Sunlord P/N:ARLDC805665C141N3B

Parameters	Inductance			DCR			Inductance(26A)			HI-POT
Unit	uH Min			mΩ Max			uH Min			-
TEST TERMINAL	Pin(1-2)	Pin(3-4)	Pin(5-6)	Pin(1-2)	Pin(3-4)	Pin(5-6)	Pin(1-2)	Pin(3-4)	Pin(5-6)	Winding to Core
Sunlord Design	140.0	140.0	140.0	17.0	17.0	17.0	85.0	85.0	85.0	1500Vac/50Hz/ 2s/5mA
Test Condition	Measured at 100KHz,1V,25°C			Measured at 25°C			Measured at 25°C			Measured at 25°C

Note: • Resistance to reflow soldering heat in accordance with JEDEC J-STD-020D with 245 ℃for 10 seconds
• MLS level 1 • RoHS compatible

Version：02

Figure 9.

PFC Inductors: 3 pcs (By Magsonder). Fill in aluminum box. Monte to heat sink.

MAGSONDER

Magsonder Innovation (Shanghai) Co., Ltd

墨尚电子技术(上海)有限公司

Page : 1 / 1

P/N:HTR-253550-181M

Dimension (mm, ±0.5mm tol.)

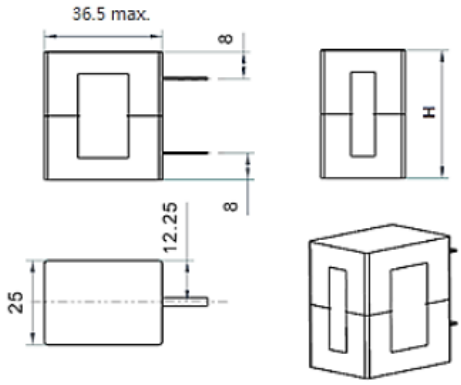

Recommend layout

P/N	HTR-253550-181M
H	50

Electrical Characteristics at 25℃

HTR: Dimension		L_0(uH)	Rdc(mΩ)		Isat(A)
Overall size (mm)	P/N	±20%	TYP.	MAX.	TYP.
25*35*50	HTR-253550-181M	180	18.5	20.0	26A for 45% rolloff

Typical DC-bias curve

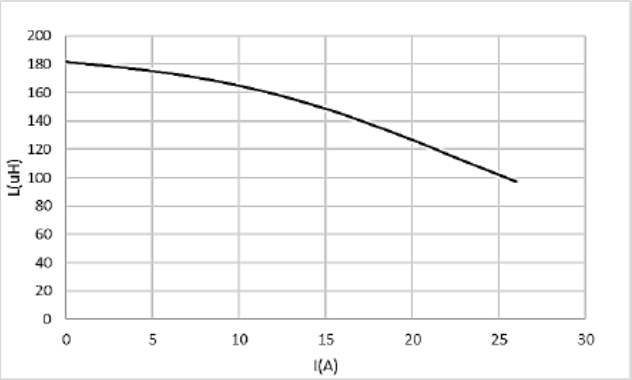

Test instruments &Test condition

Items	Testing Condition	Testing Point	Specification
Inductance	100KHz,1V HP4284 or Equivalent	L:Terminal-Terminal	as L-I Curve
Dielectric Strength	LK7122 or Equivalent	Coil-Core/Housing	2.5KV AC,50Hz,1Min.<2mA
Insulation Resistance	LK7122 or Equivalent	Coil-Core/Housing	>100MΩ,0.5KV,DC
Operating Temperature	Class F Insulation,-25 °C~155 °C		
Storage Temperature	-25 °C~75 °C		
Dimension (mm)	See Spec,detail		

www.magsonder.com Tel: +86-(0)21-5428 3680 or 181 1612 6818

Figure 10.

Auxiliary Transformer: T150.

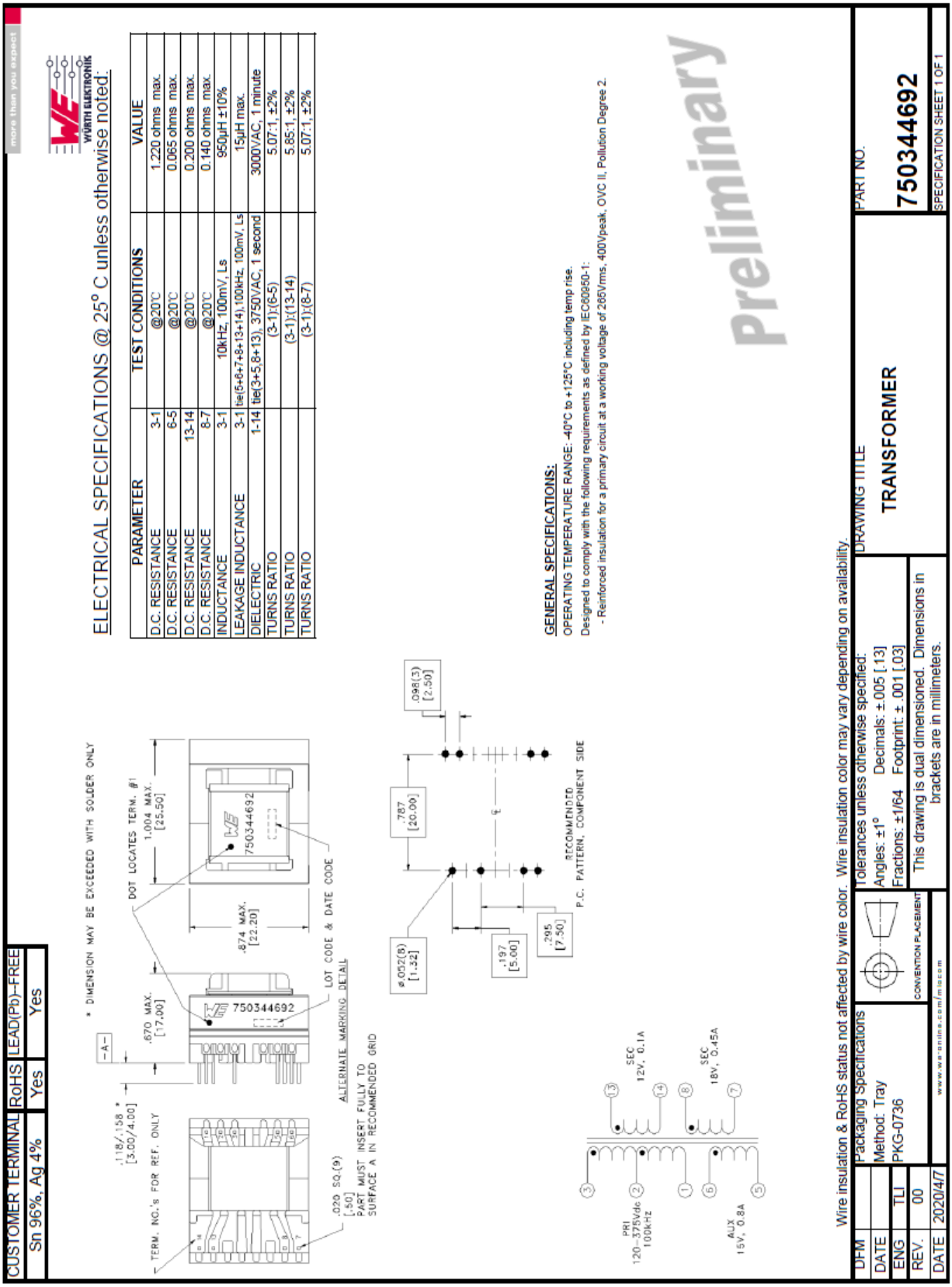

Figure 11.

Current Transformer: T72.

Magsonder Innovation (Shanghai) Co., Ltd

墨尚电子技术(上海)有限公司

P/N:MCTE10-1801

SCHEMATIC

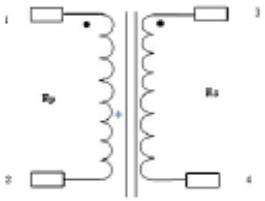

DIMENSION(unit: mm)

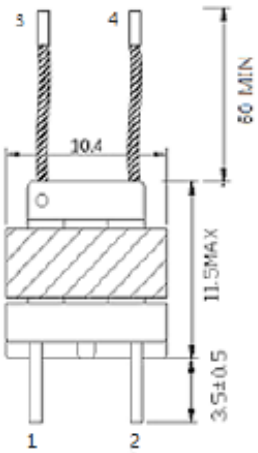

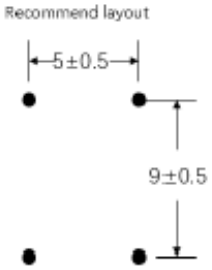

SPECIFICATION

Core Type: EE10

Inductance：60mH(min)

Turns Ratio：Np：Ns =180:1

Insulation Level : CLASS B

HI-POT: 2.5kVac/rms

Primary coils: Insulated Wire Φ0.1mm

Secondary coils: TIW-B Wire Φ0.5mm*6P

www.magsonder.com Tel: +86-(0)21-5428 3680 or 181 1612 6818

Figure 12.

LLC Transformers: Fill in aluminum box. Monte to heat sink.

Sunlord www.sunlordinc.com

Proposal of Automotive Electronics Transformers for ATWPPQ655462B200T

Approved By	Checked By	Prepared By
Jinbo Cai	/	Minglei Yang
2020/4/3	/	2020/4/3

Note: This is a preliminary proposal and the final product P/N, Structure, Shape and Dimensions, Electrical Characteristics may be changed. You are requested to confirm and approve our spec.

1.Structure and Material

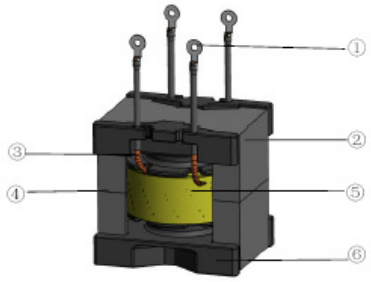

No.	Part Name	Material Name
①	Terminal	C1100
②	Core	Mn-Zn Ferrite TPW33 or Equivalent Material
③	Wire	Mylar Wire Ø0.1mm*300P
④	Glue	Epoxy
⑤	Tape	Kapton Tape (180℃)
⑥	Bobbin	PM-9630

2. Shape and Dimensions (unit: mm)

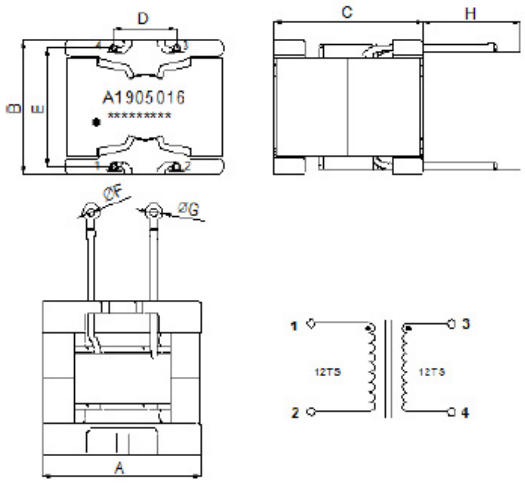

Shape and Dimensions

Note : For RoHS compliant products:
1. Solder : Sn /Ag /Cu .
2.Marking Code: A1905016 Sunlord Code
3.Date Code: : ** ** ****
① ② ③

① Year
② Week
③ Trace Code

Item	A	B	C	D	E	F	G	H
Sunlord Spec	66.2Max	54.0Max	62.0Max	25.5Ref	47.5Ref	4.2Ref	8.0Ref	65.0Ref

3. Electrical Characteristics @ 25 ℃: (Operating Temperature: - 40℃ to + 125℃; Operating Frequence:150kHz)

Sunlord P/N:ATWPPQ655462B200T

Parameters	Inductance (Lp)	Leakage Inductance (Lk)	DCR		TURNS RATIO	HI-POT
Unit	μH	μH	mΩ Max	mΩ Max	Ts	/
Test Terminal	Pin(1-2)	Pin(1-2), shorted all other pins	Pin(1-2)	Pin(3-4)	Pin(1-2):(3-4)	Pri to Sec
Sunlord Design	170.0±10%	25.0uH±10%	20.00	20.00	12:12±0.5	3000Vac/50Hz/1mA/2s
Test Condition	Measured at 150KHz,0.1V 25°C	Measured at 150KHz,1.0V 25°C	Measured at 25°C	Measured at 25°C	Measured at 15.75KHz,1V, 25°C	Measured at 25°C

Note: • Resistance to reflow soldering heat in accordance with JEDEC J-STD-020D with 245 ℃for 10 seconds
• MLS level 1 • RoHS compatible

Revision:02

Figure 13.

LLC Transformers: Fill in aluminum box. Monte to heat sink.

Magsonder Innovation (Shanghai) Co., Ltd

墨尚电子技术(上海)有限公司

Page : 1 / 1

P/N:PTX6R6K-17025

SCHEMATIC

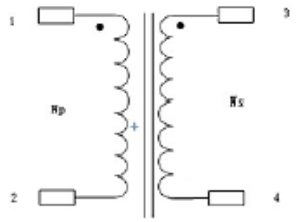

DIMENSION(mm, ±1mm tol.)

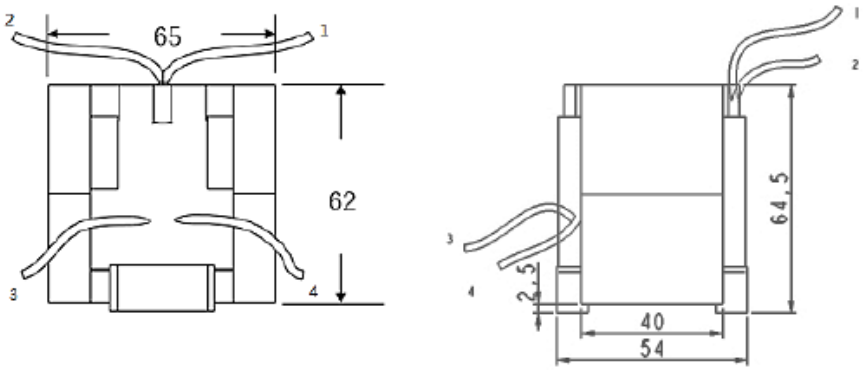

SPECIFICATION

Core Material: PC95 or equivalent

Type: PQ65/62

Self-Inductance L_P (1--2 test, 3--4 open)：170uH±10%

Leakage inductance L_K (1--2 test, 3--4 short): 25uH±10%

Turns Ratio：Np：Ns =13:13

Insulation Level : CLASS F

HI-POT: 3.3kVac/rms

Primary coils: Litz Wire

Secondary coils: Litz Wire

www.magsonder.com Tel: +86-(0)21-5428 3680 or 181 1612 6818

Figure 14.

DCDC Transformers: T1, T2 of the Power Supply for the LLC Control Board.

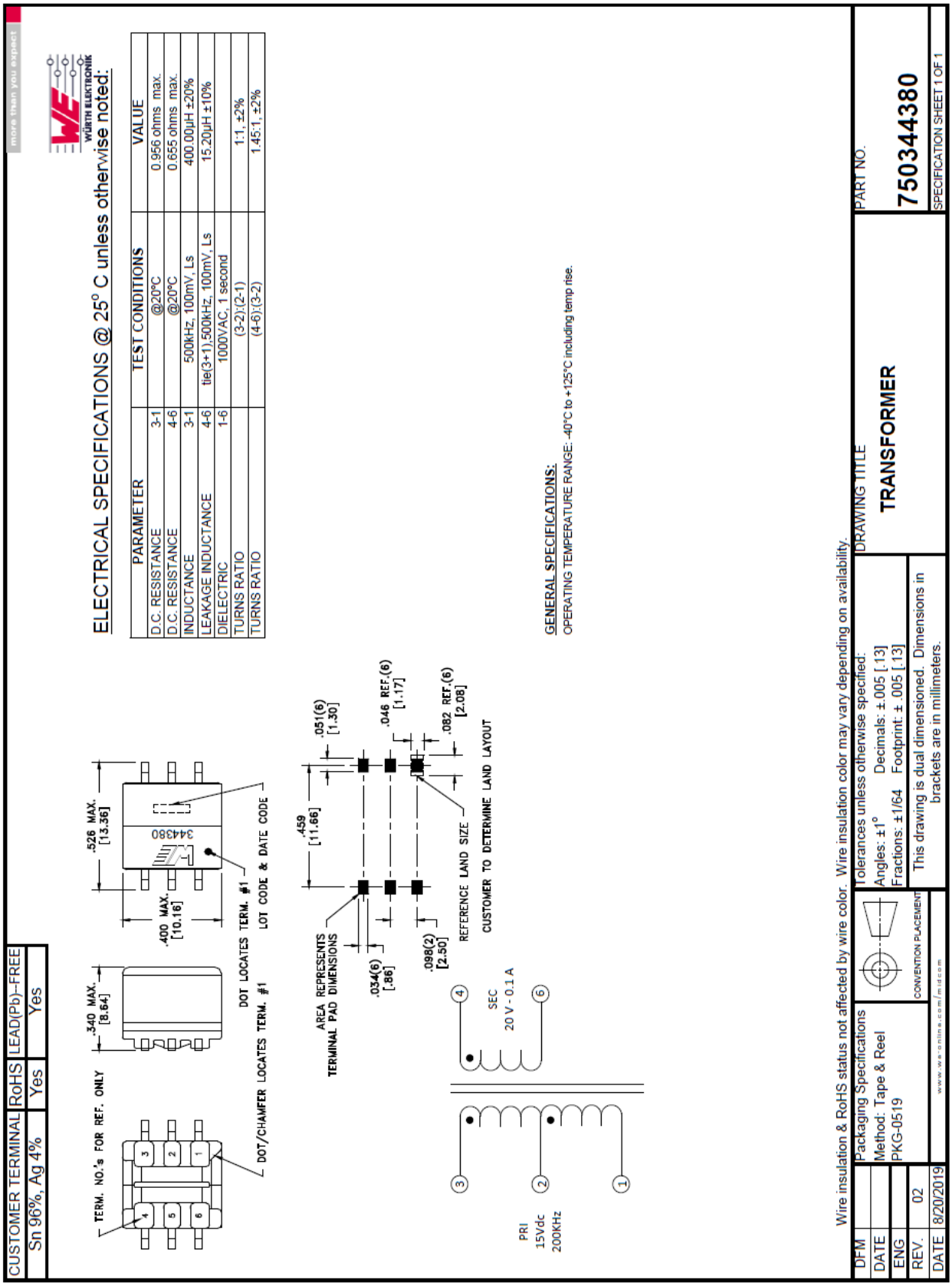

Figure 15.

TEST RESULT

Table 3. POWER FACTOR AT Vin = 90 Vac

Input Current (A)	5	10	15	20	25	32
Vo = 350 Vdc	0.983	0.995	0.996	0.997	0.997	0.998
Vo = 400 Vdc	0.982	0.996	0.997	0.997	0.998	0.998

Table 4. POWER FACTOR AT Vin = 110 Vac

Input Current (A)	5	10	15	20	25	32
Vo = 350 Vdc	0.979	0.995	0.995	0.996	0.997	0.997
Vo = 400 Vdc	0.982	0.996	0.996	0.997	0.997	0.998

Table 5. POWER FACTOR AT Vin = 220 Vac

Input Current (A)	5	10	15	20	25	32
Vo = 350 Vdc	0.944	0.963	0.972	0.979	0.984	0.988
Vo = 400 Vdc	0.949	0.986	0.991	0.992	0.994	0.995

Table 6. POWER FACTOR AT Vin = 264 Vac

Input Current (A)	5	10	15	20	25	32
Vo = 400 Vdc	0.776	0.974	0.984	0.988	0.989	0.991

Table 7. EFFICIENCY OF PFC STAGE AT Vin = 90 Vac

Input Current (A)	5	10	15	20	25	32
Vo = 350 Vdc	96.25%	95.35%	95.22%	95.15%	94.93%	94.30%
Vo = 400 Vdc	96.14%	95.18%	94.89%	94.92%	94.81%	94.18%

Table 8. EFFICIENCY OF PFC STAGE AT Vin = 110 Vac

Input Current (A)	5	10	15	20	25	32
Vo = 350 Vdc	96.32%	96.16%	96.03%	95.92%	95.66%	95.29%
Vo = 400 Vdc	96.18%	96.13%	95.77%	95.69%	95.50%	95.22%

Table 9. EFFICIENCY OF PFC STAGE AT Vin = 220 Vac

Input Current (A)	5	10	15	20	25	32
Vo = 350 Vdc	97.77%	98.18%	97.80%	97.63%	97.46%	97.30%
Vo = 400 Vdc	97.78%	97.88%	97.76%	97.49%	97.28%	97.17%

Table 10. EFFICIENCY OF PFC STAGE AT Vin = 264 Vac

Input Current (A)	5	10	15	20	25	28
Vo = 400 Vdc	98.66%	98.31%	98.09%	98.83%	97.71%	97.63%

Waveforms of PFC stage. CH1: Input PFC Driver; CH2: Input Current; CH3: Input Voltage

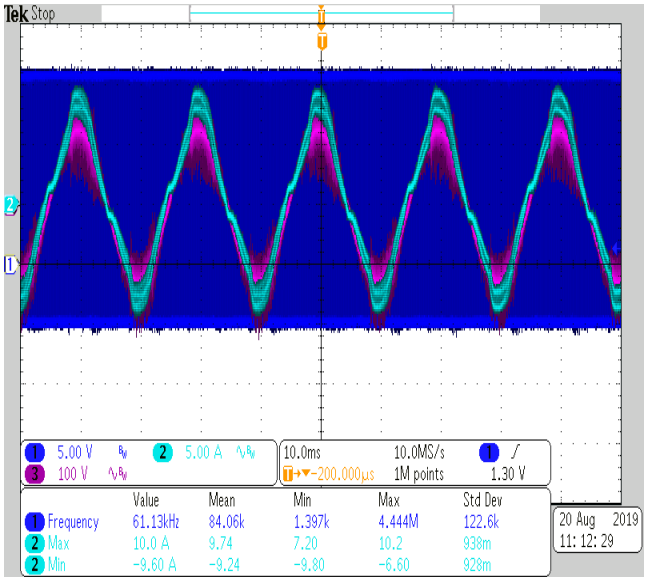

Figure 16. Vin = 90 V/AC, Vout = 350 V, Iout = 5 A

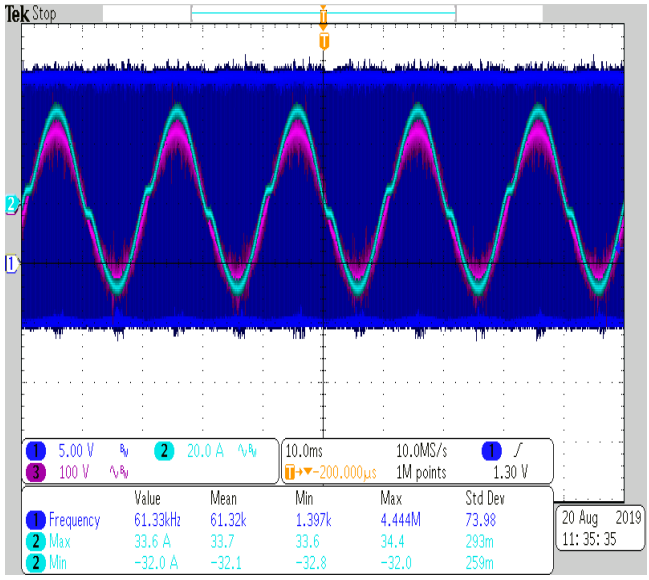

Figure 17. Vin = 90 V/AC, Vout = 350 V, Iout = 20 A

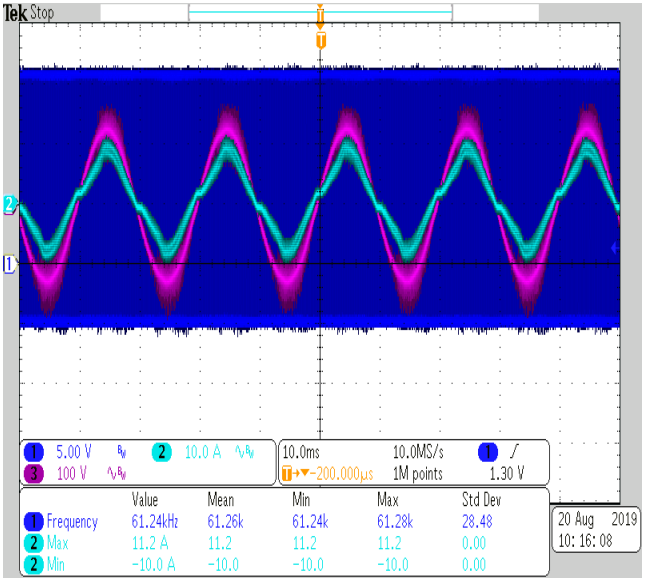

Figure 18. Vin = 90 V/AC, Vout = 400 V, Iout = 5 A

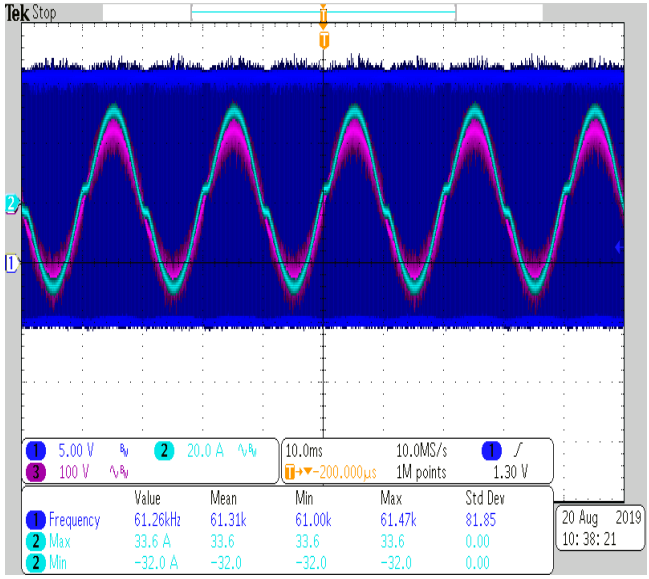

Figure 19. Vin = 90 V/AC, Vout = 400 V, Iout = 20 A

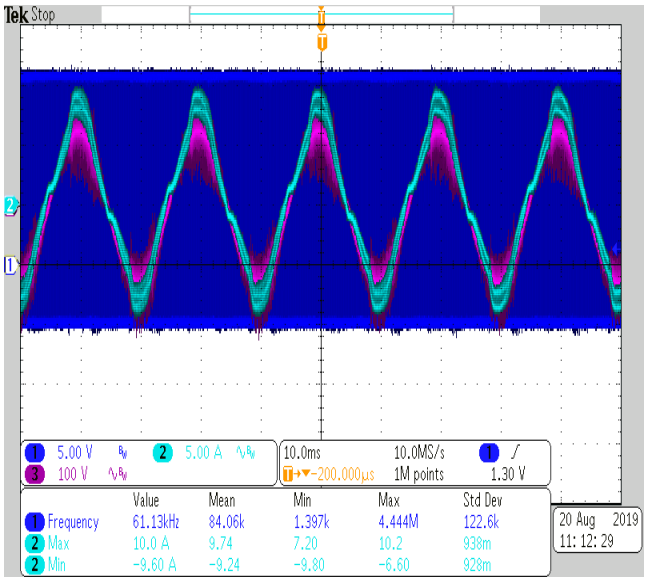

Figure 20. Vin = 110 Vac, Vo = 350 V, Iin = 5 A

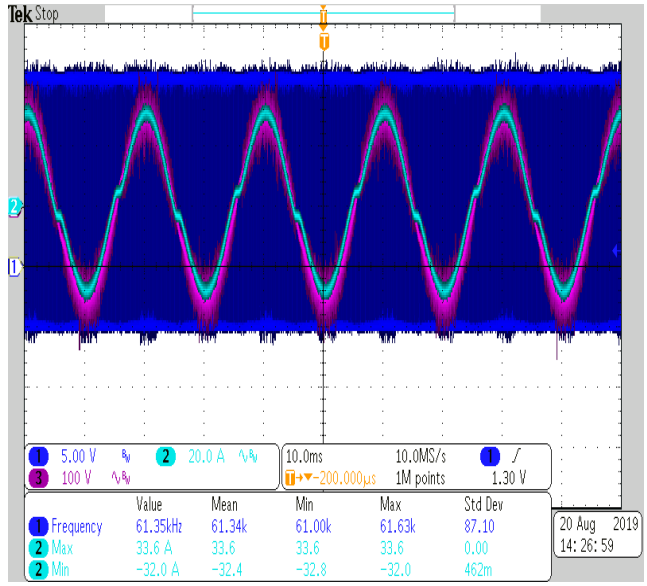

Figure 21. Vin = 110 Vac, Vo = 350 V, Iin = 20 A

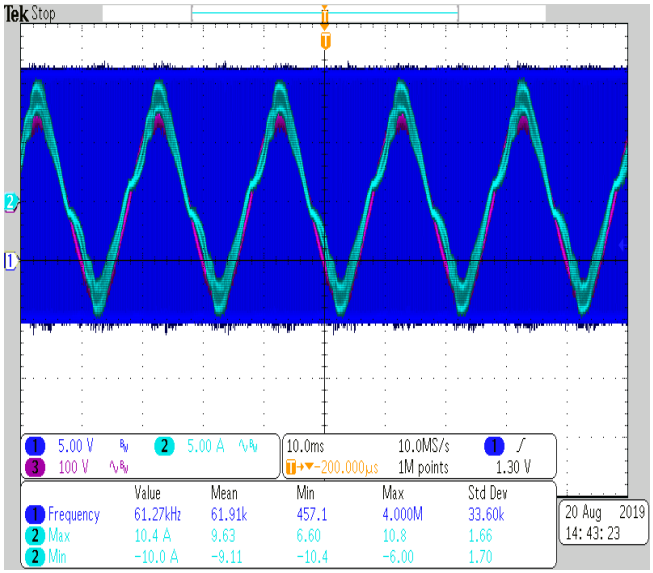

Figure 22. Vin = 110 Vac, Vo = 400 V, Iin = 5 A

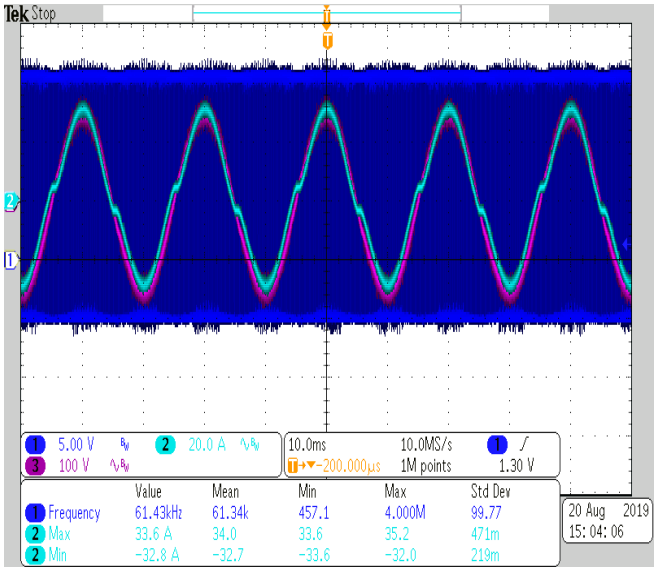

Figure 23. Vin = 110 Vac, Vo = 400 V, Iin = 20 A

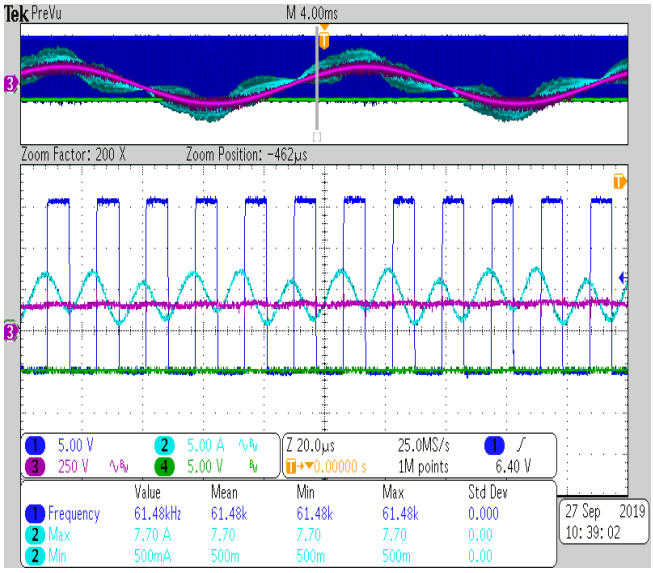

Figure 24. Vin = 220 Vac, Vo = 350 V, Iin = 5 A

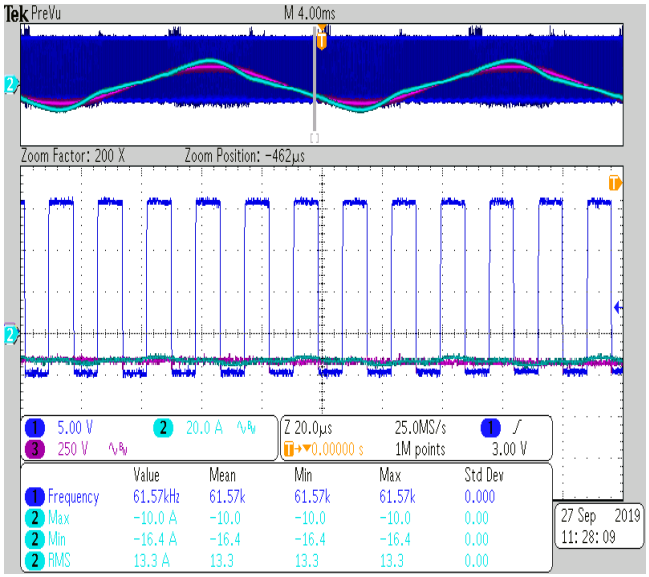

Figure 25. Vin = 220 Vac, Vo = 350 V, Iin = 20 A

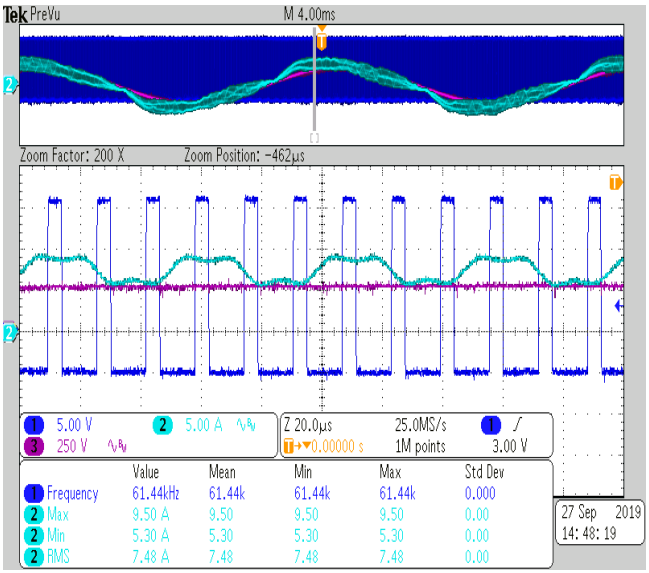

Figure 26. Vin = 220 Vac, Vo = 400 V, Iin = 5 A

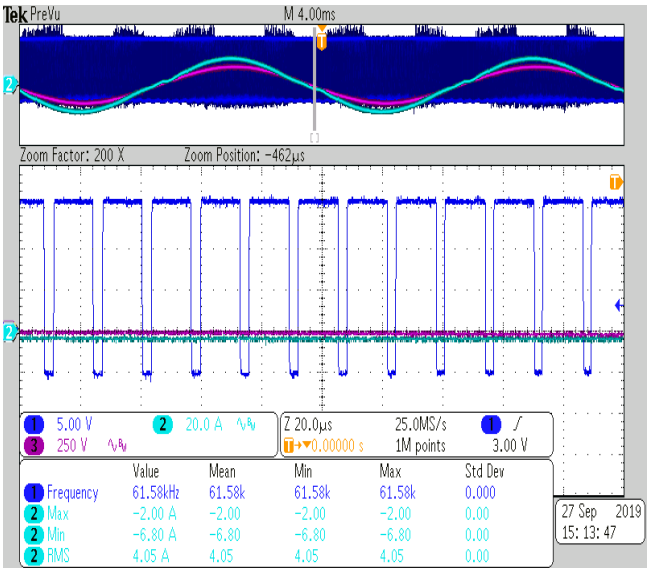

Figure 27. Vin = 220 Vac, Vo = 400 V, Iin = 20 A

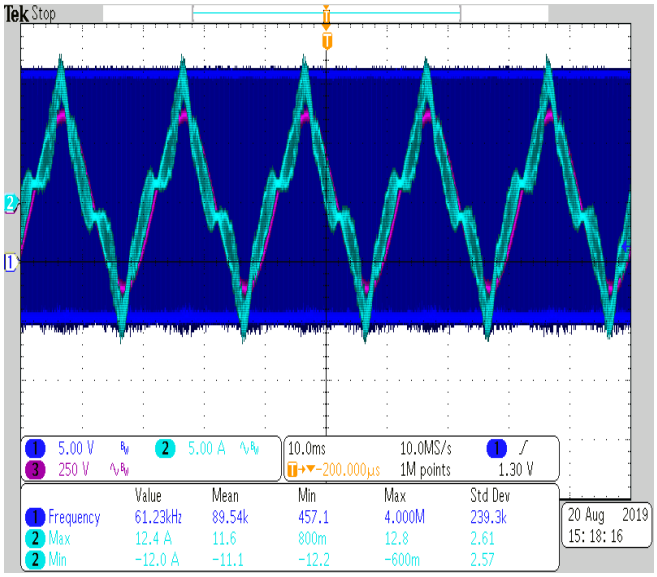

Figure 28. Vin = 264 Vac, Vo = 400 V, Iin = 5 A

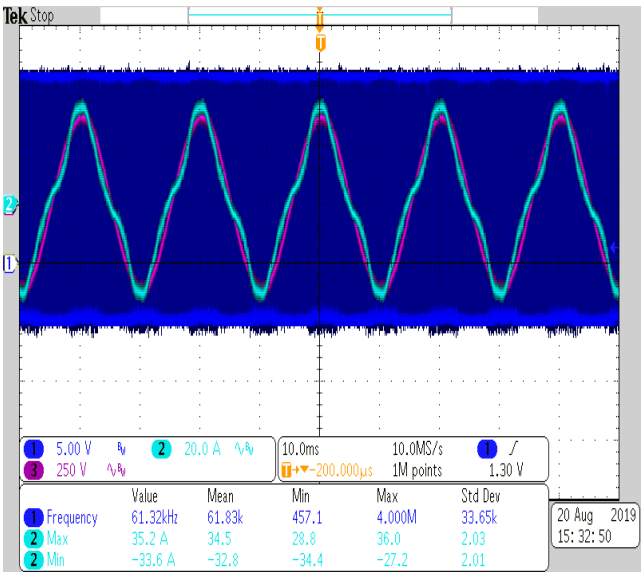

Figure 29. Vin = 264 Vac, Vo = 400 V, Iin = 20 A

Efficiency of total set at different Vout under different Vbus. (Vin = 220 Vac).

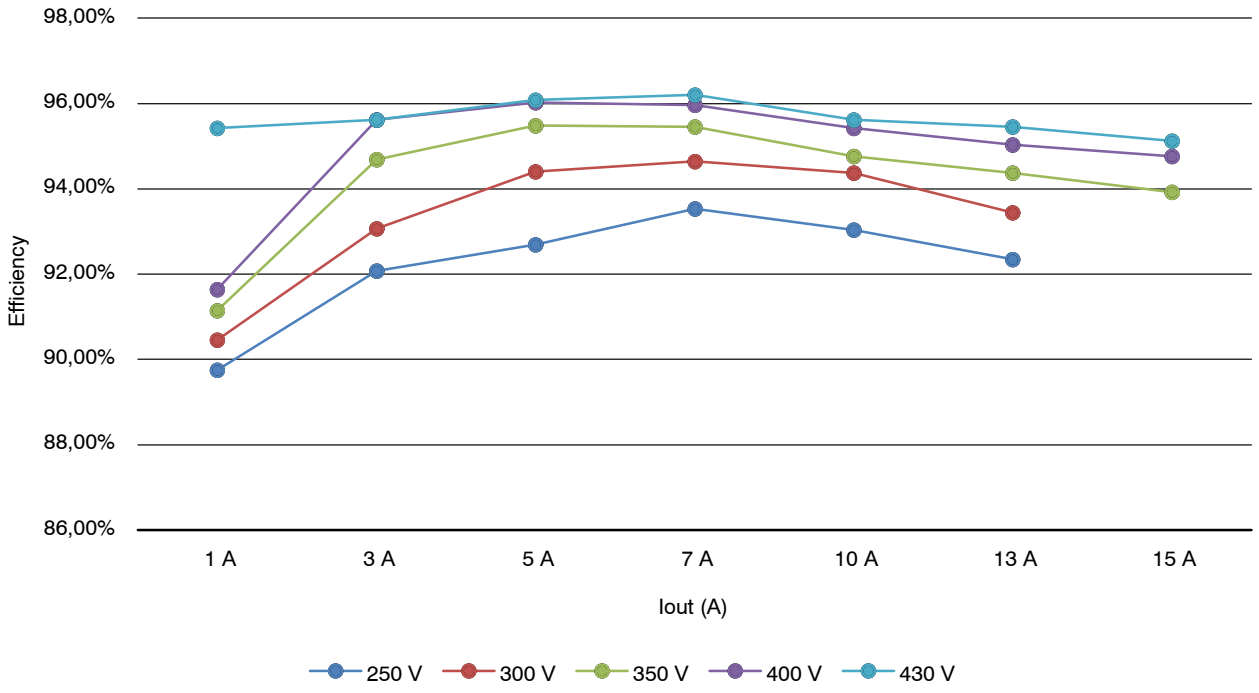

Figure 30. Vbus = 395 V

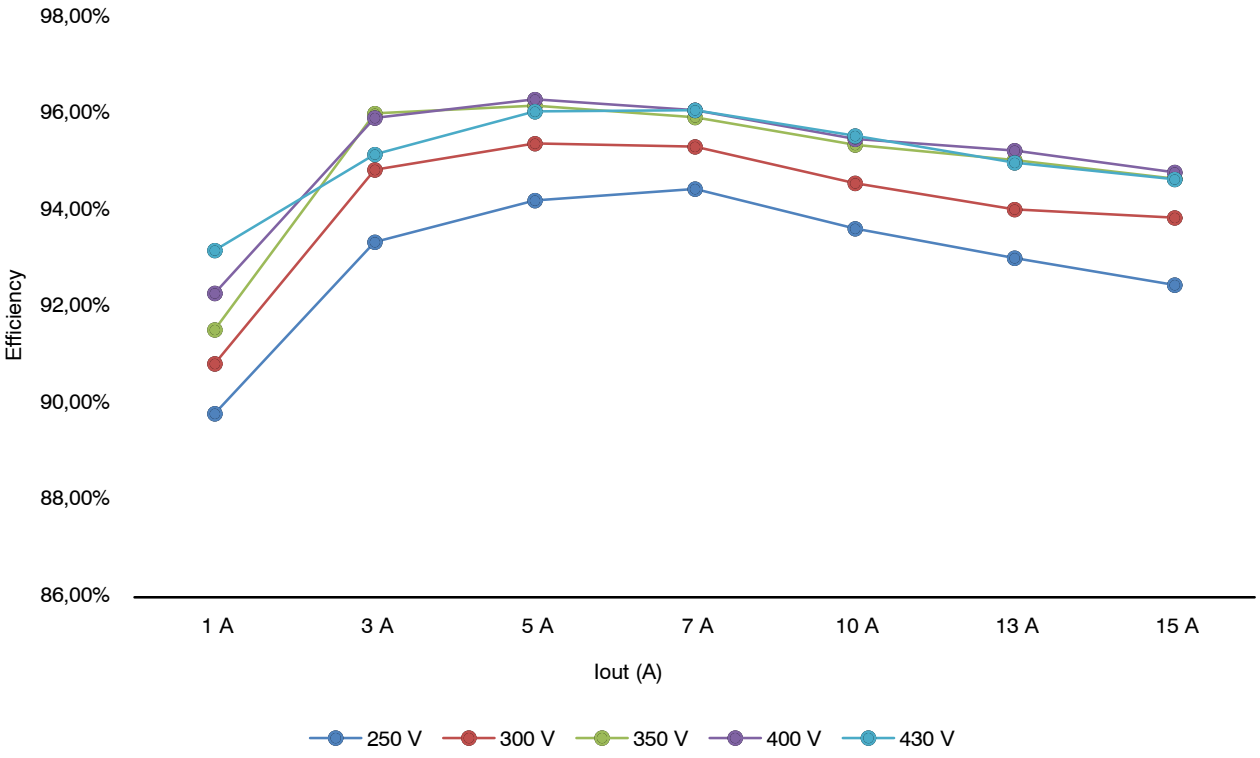

Figure 31. Vbus = 350 V

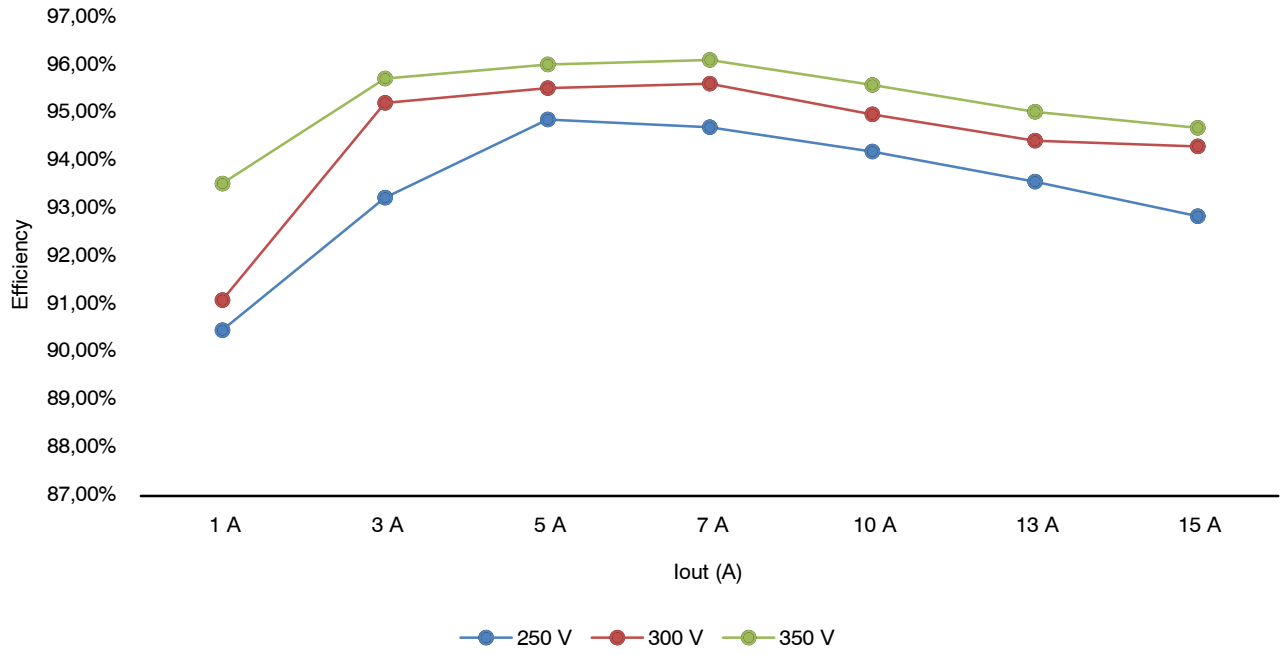

Figure 32. Vbus = 320 V

Efficiency of total set at different Vbus under Vout = 350 Vdc, Iout = 10 A. (Vin = 220 Vac).

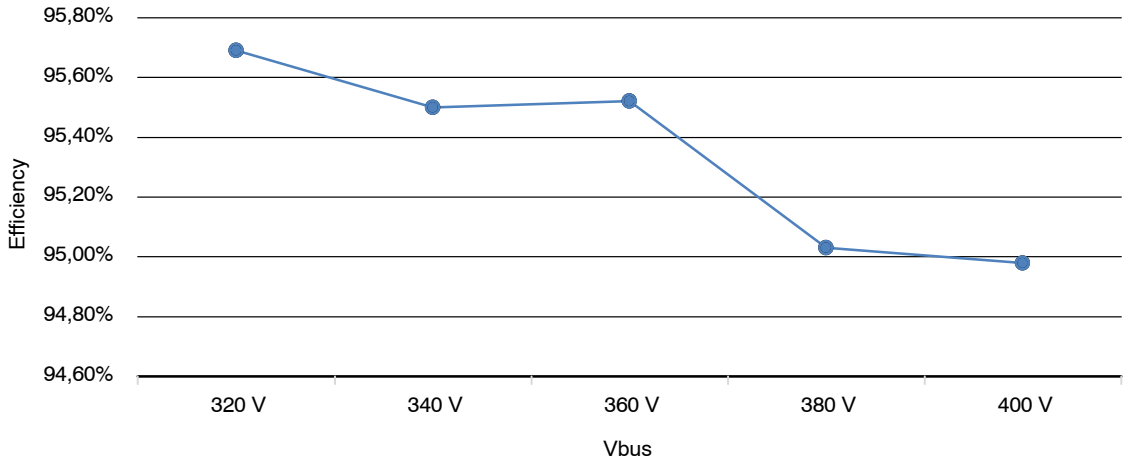

Figure 33. Vout = 350 V, Iout = 10 A

Waveforms of LLC stage. Purple: Voltage between each center of the full bridge (Drain of Q62 to Drain of Q72); Pool Blue: Current of resonate tank; Green: Vgs of Q72; Dark Blue: Vgs of Q62.

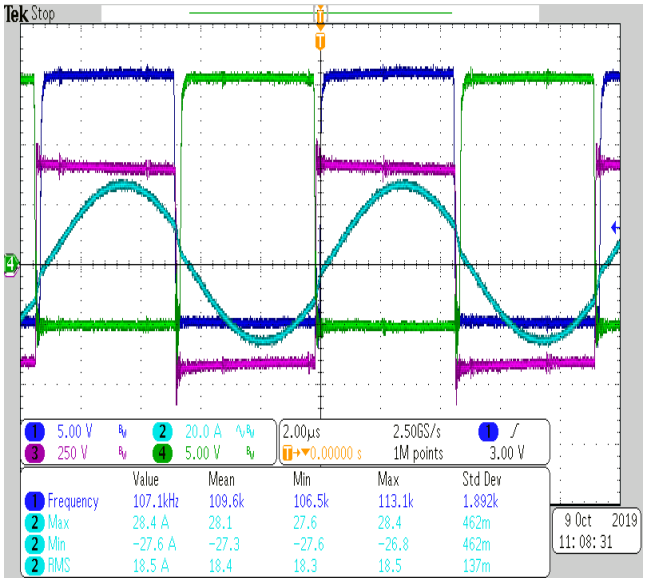

Figure 34. Vbus = 390 V, Vo = 430 V, Io = 13 A

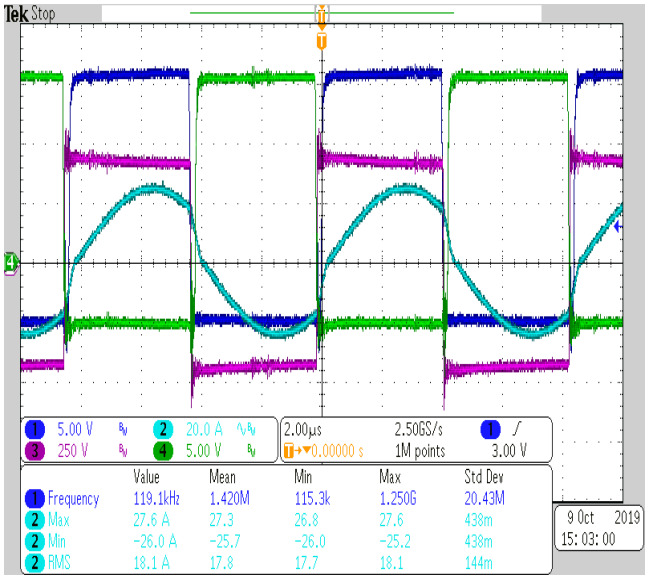

Figure 35. Vbus = 390 V, Vo = 400 V, Io = 13 A

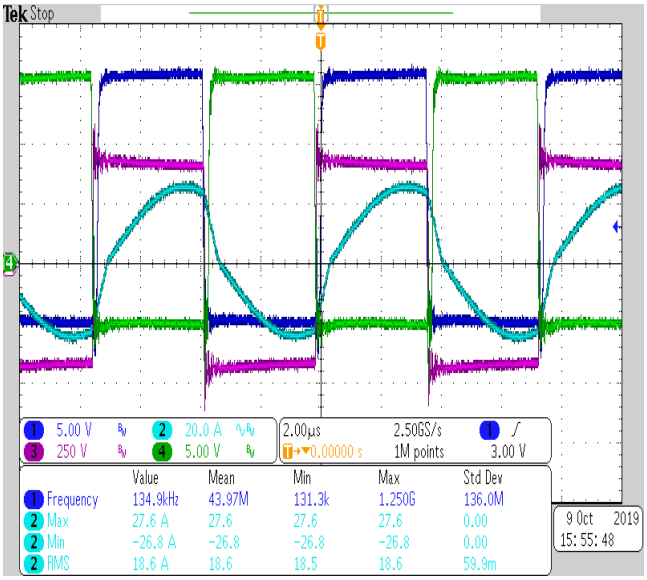

Figure 36. Vbus = 390 V, Vo = 350 V, Io = 13 A

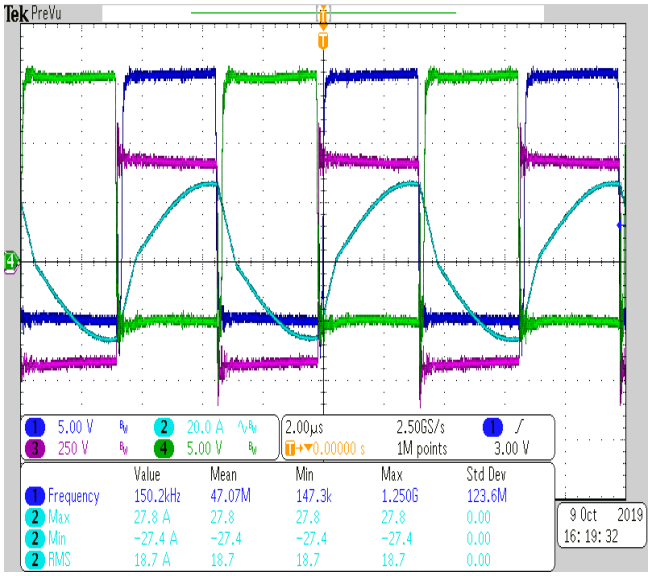

Figure 37. Vbus = 390 V, Vo = 300 V, Io = 13 A

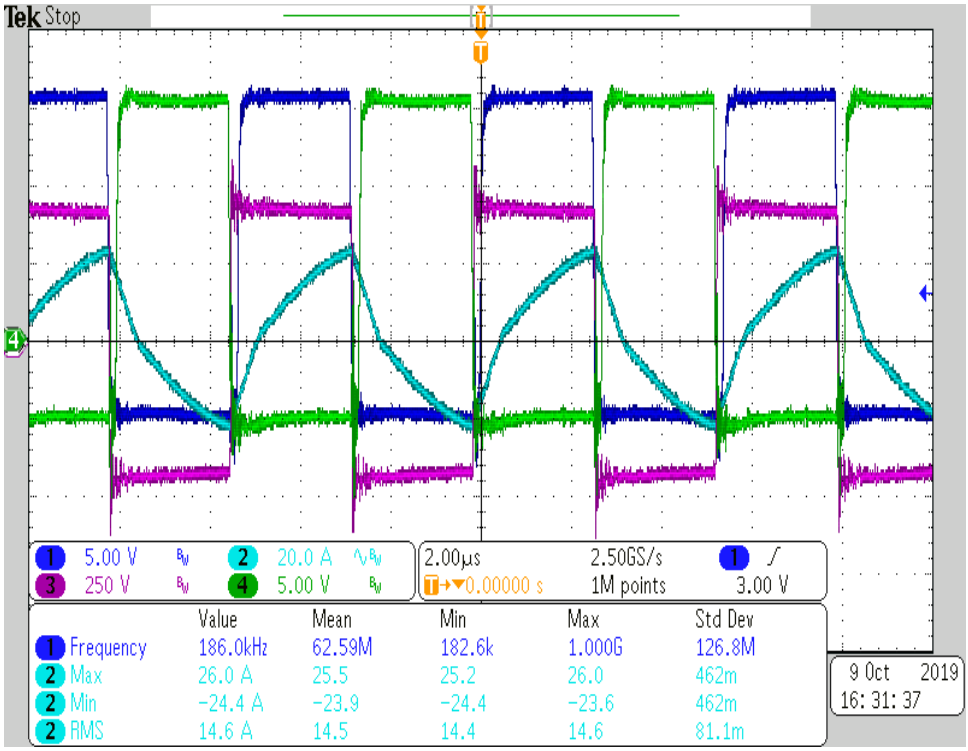

Figure 38. Vbus = 390 V, Vo = 250 V, Io = 10 A

PCB LAYOUT

Top side view of main board. 254 x 198 x 2 mm. 2 oz.

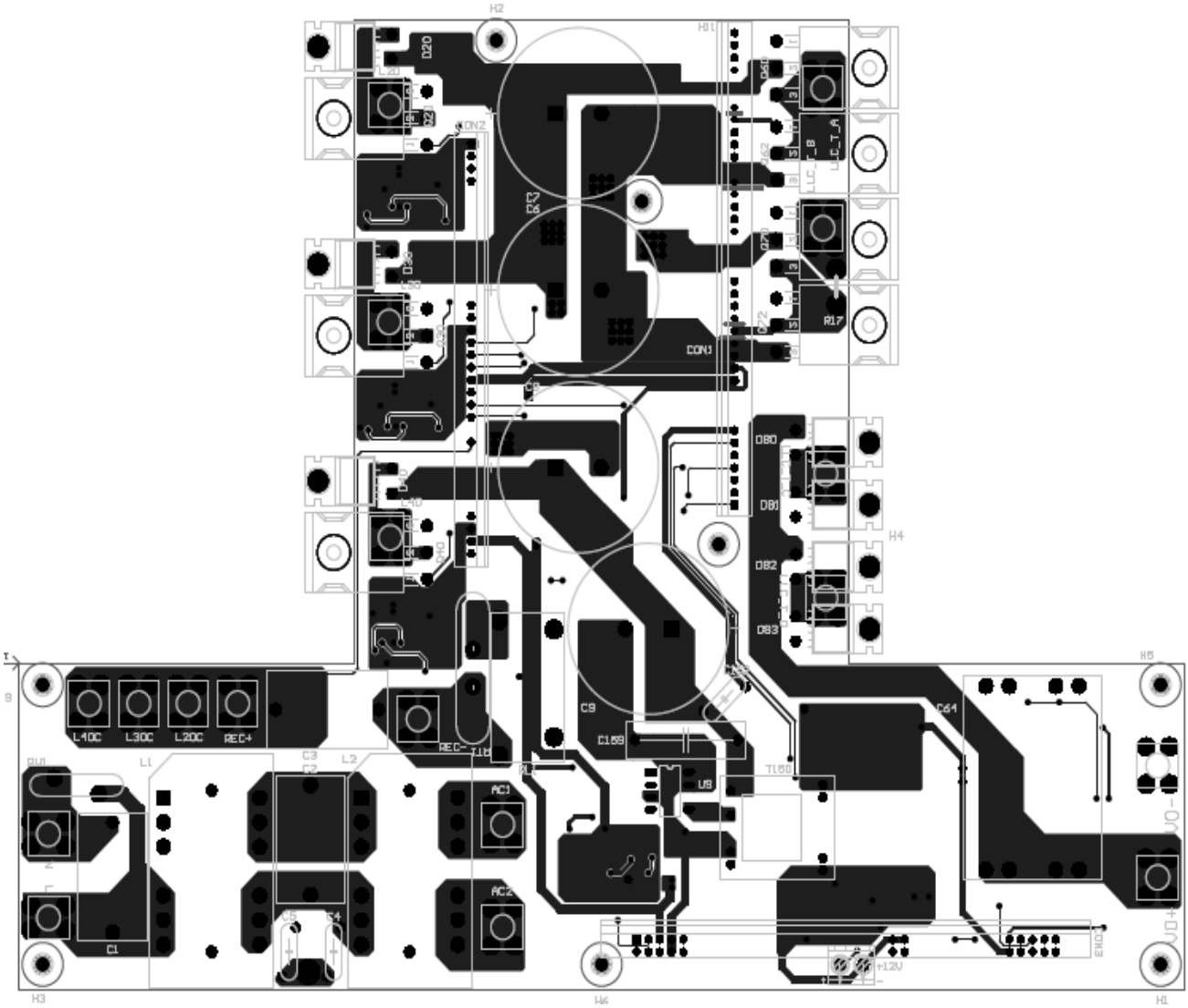

Figure 39. Top Side View of Main Board. 254 x 198 x 2 mm. 2 oz.

Bottom side view of main board. 254 x 198 x 2 mm. 2 oz.

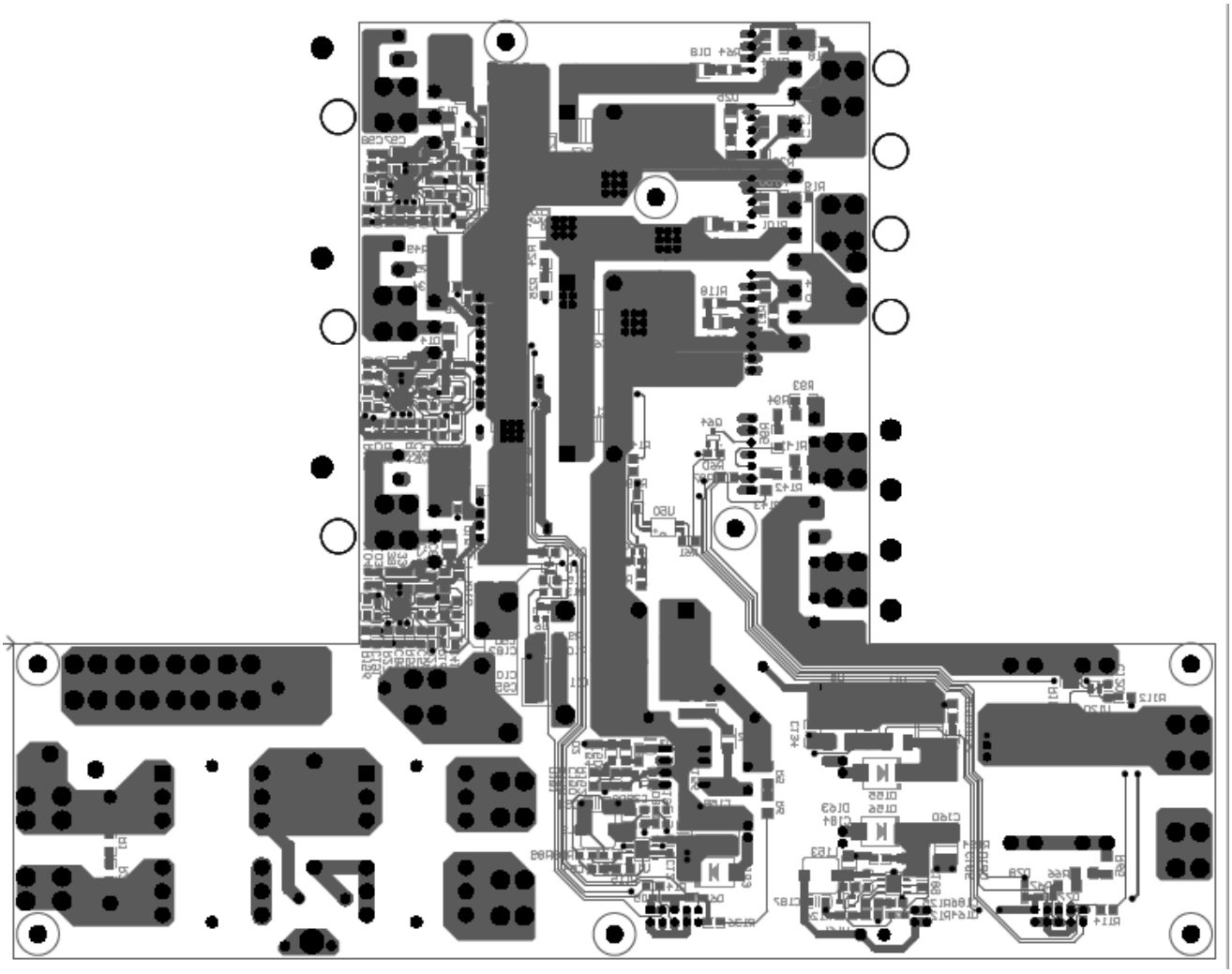

Figure 40. Bottom Side View of Main Board. 254 x 198 x 2 mm. 2 oz.

Top side view of PFC control daughter board (88.9 x 55.9 x 1.6 mm. 1 oz)

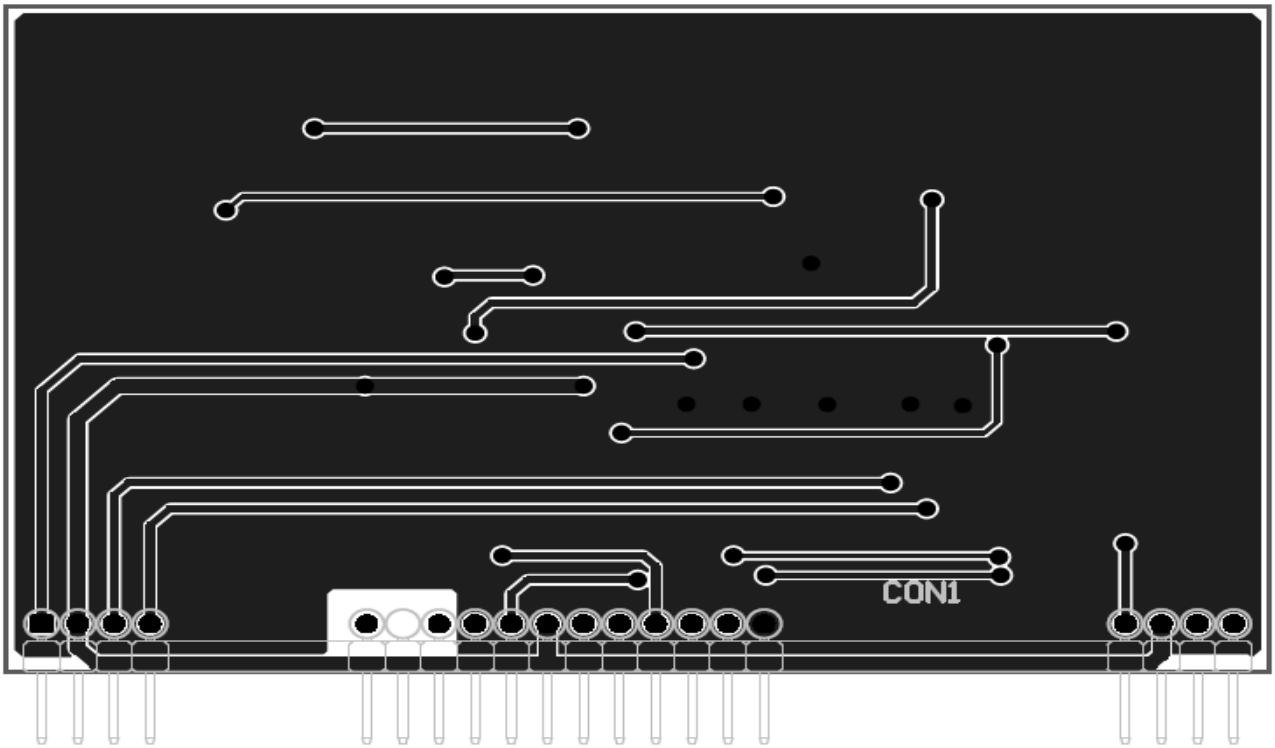

Figure 41. Top Side View of PFC Control Daughter Board (88.9 x 55.9 x 1.6 mm. 1 oz)

Bottom side view of PFC control daughter board (88.9 x 55.9 x 1.6 mm. 1 oz)

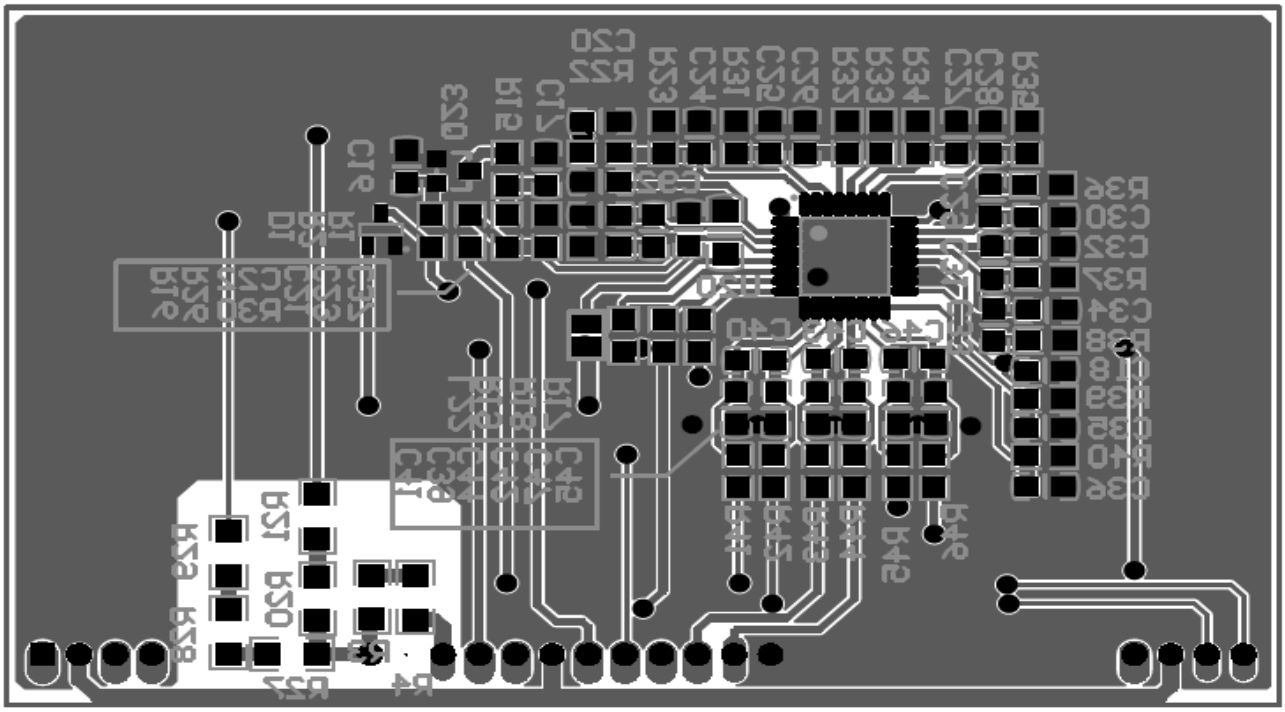

Figure 42. Bottom Side View of PFC Control Daughter Board (88.9 x 55.9 x 1.6 mm. 1 oz)

Top side view of LLC control daughter board (101.6 x 55.9 x 1.6 mm. 1 oz)

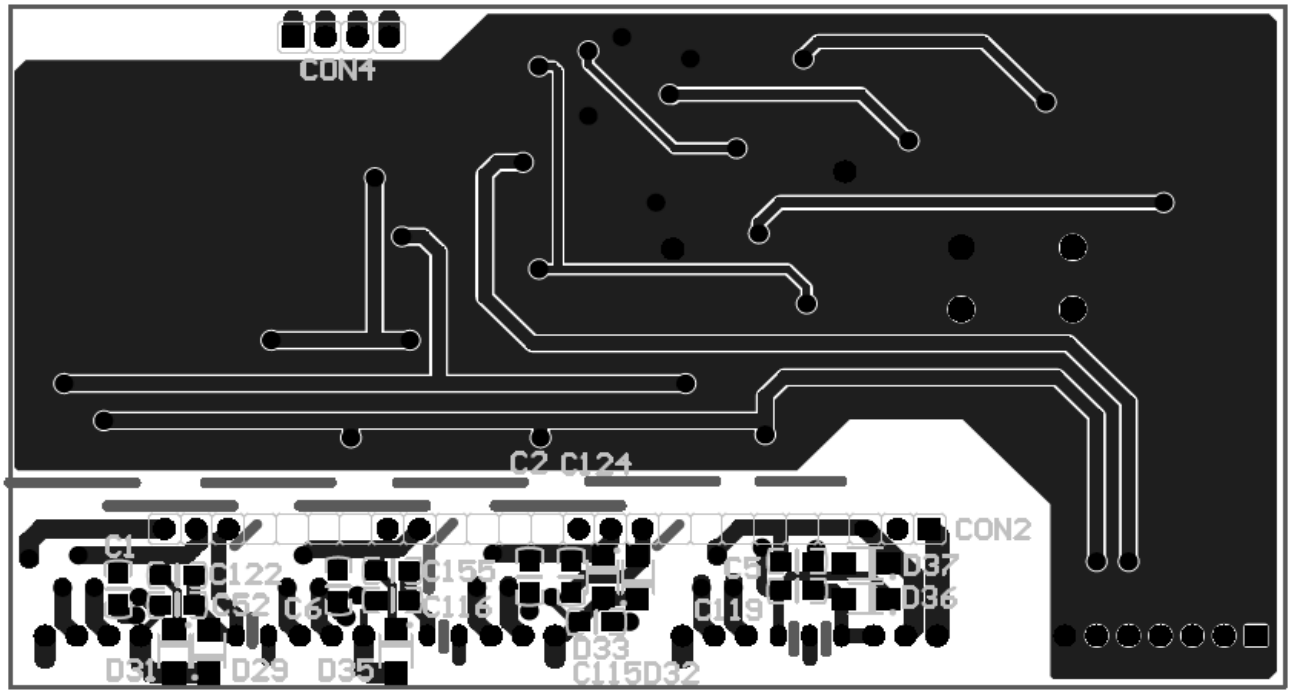

Figure 43. Top Side View of LLC Control Daughter Board (101.6 x 55.9 x 1.6 mm. 1 oz)

Bottom side view of LLC control daughter board (101.6 x 55.9 x 1.6 mm. 1 oz)

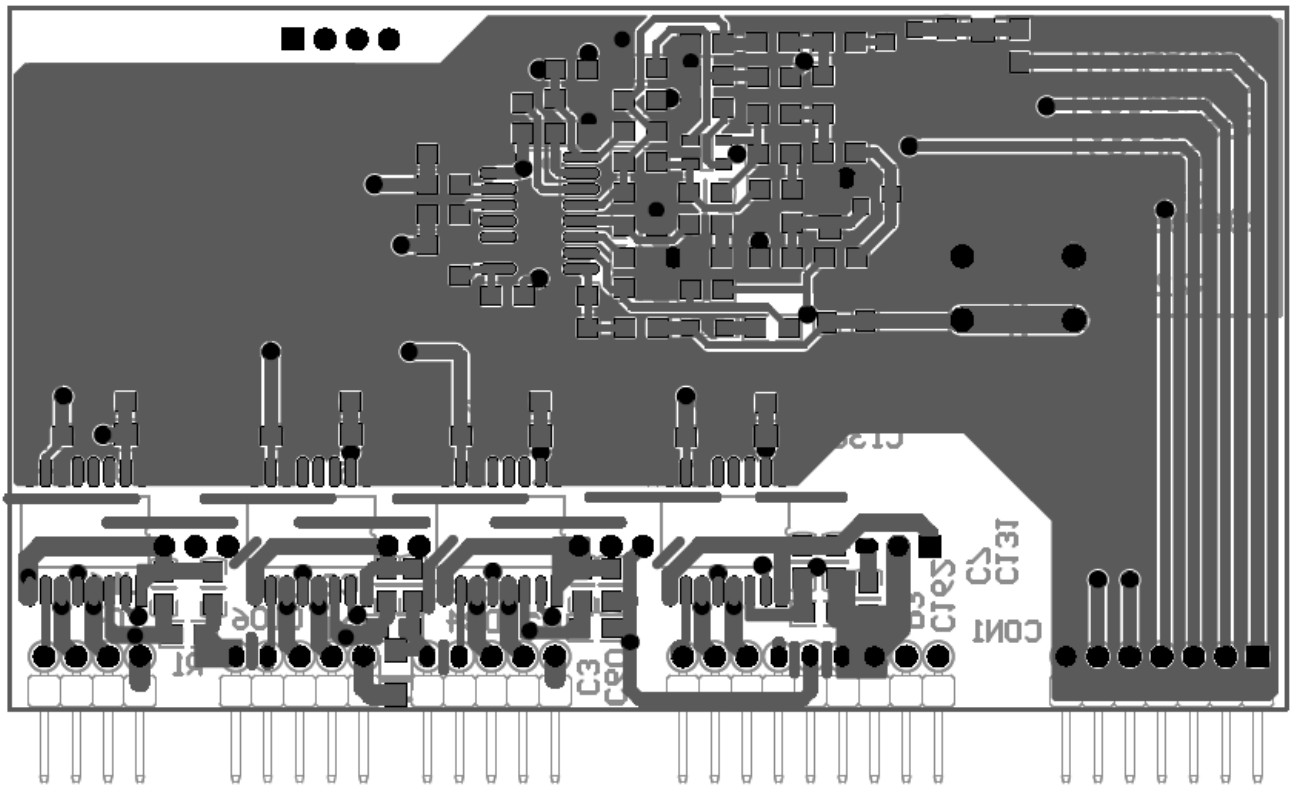

Figure 44. Bottom Side View of LLC Control Daughter Board (101.6 x 55.9 x 1.6 mm. 1 oz)

Top side view of Analog Control board (106.68 x 45.72 x 1.6 mm. 1 oz)

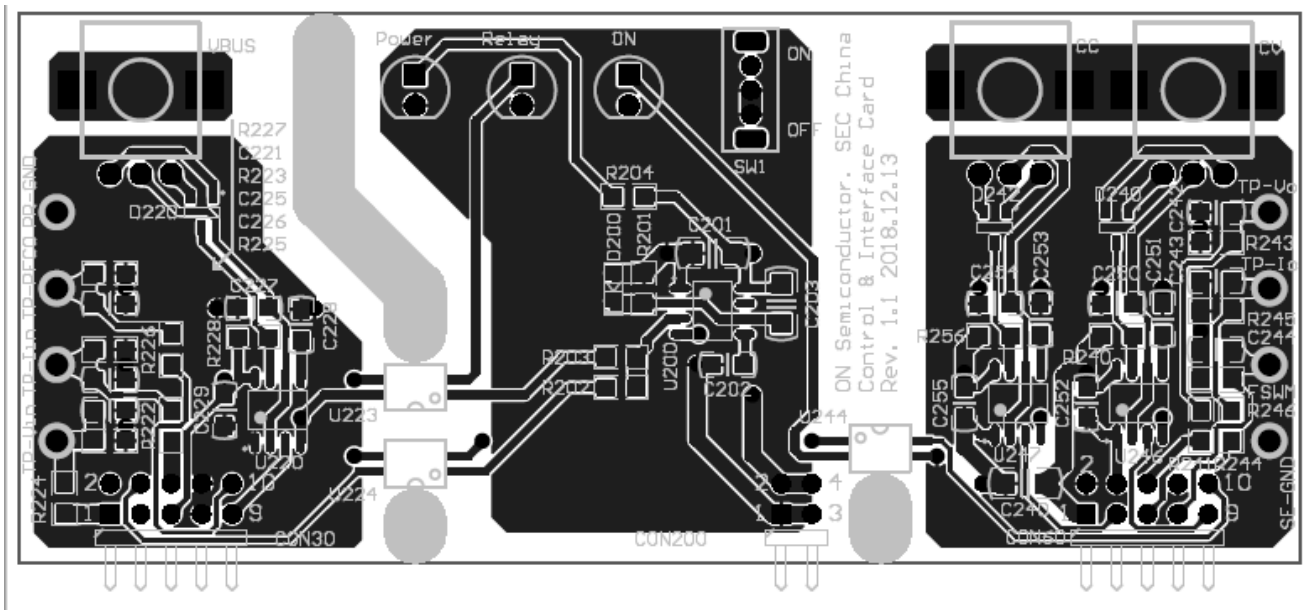

Figure 45. Top Side View of Analog Control Board (106.68 x 45.72 x 1.6 mm. 1 oz)

Bottom side view of Analog Control board (106.68 x 45.72 x 1.6 mm. 1 oz)

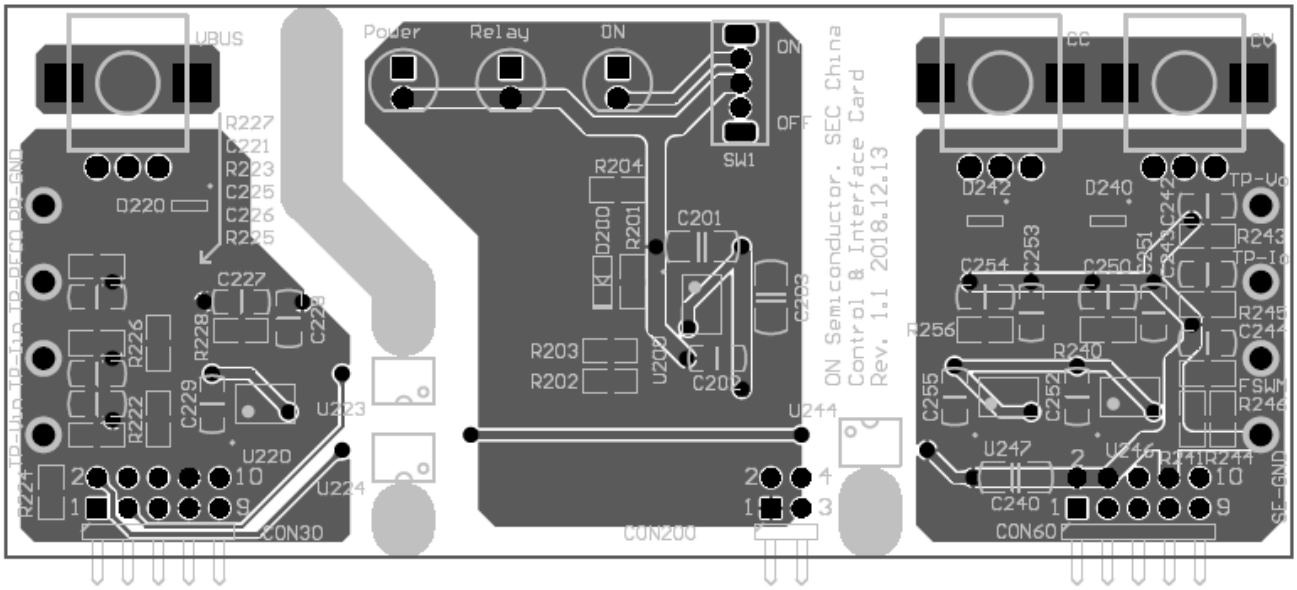

Figure 46. Bottom Side View of Analog Control Board (106.68 x 45.72 x 1.6 mm. 1 oz)

Top and Bottom side view of Analog control daughter board (106.7 x 45.7 x 1.6 mm. 1 oz).

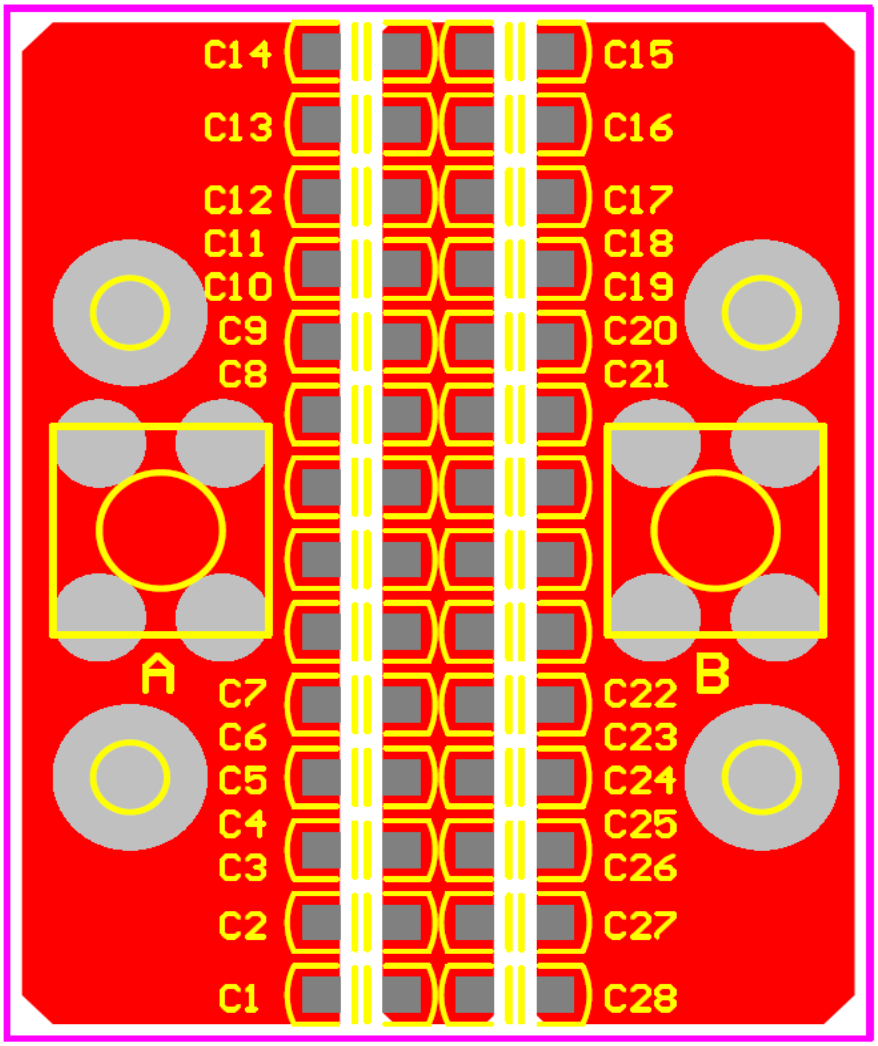

Figure 47. Top and Bottom Side View of Analog Control Daughter Board (106.7 x 45.7 x 1.6 mm. 1 oz)

BILL OF MATERIALS

Table 11. BILL OF MATERIALS − MAIN BOARD

Manufacturer Part Number	Manufacturer	Description	Designator	Qty
691101710002	WURTH	Connector 5 mm 2 Pins Screw type	+12V	1
74760050	WURTH	Connector 5 mm Screw type. 200 X 300 mil	AC1, AC2, L, L20C, L30C, L40C, LLC_T_A, LLC_T_B, LLC_T_C, LLC_T_D, N, REC+, REC−, VO+, VO−	15
890324026034CS	WURTH	X−Cap 275 VAC 2.2 μF X2	C1, C2	2
R46KN4220JHP0M	KEMET	X−Cap 275 VAC 2.2 μF X2	C1, C2	2
ECWFG2J225K	Panasonic	Film Cap 630 V 2.2 μF PP	C3	1
MEXPN42204JJ	Dura	Film Cap 630 V 2.2 μF PP	C3	1
CD45−E2GA472M−NKA	TDK	Y−Cap 400 VAC 4700 pF Y1	C4, C5, C152	3
JY14E472MY72N	JNC	Y−Cap 400 VAC 4700 pF Y2	C4, C5, C152	3
861141486026	WURTH	E−Cap 450 V−680 μF−105 (35 X 57 mm)	C6, C7, C8, C9	4
B43508A5687M062	TDK	E−Cap 450 V−680 μF−105 (35 X 57 mm)	C6, C7, C8, C9	4
CAA573X7R1E157M	TDK	MLCC 2220−25V−157K−X7R	C11, C158	2
CGA4J1X7R1V475K125AC	TDK	MLCC 0805−35V−475M−X7R	C12,C55, C56, C57	4
CAA572X7T2J105M	TDK	MLCC 2220−630V−105M−X7T	C14, C67, C68	3
KC355TD7LQ105MV01	MURATA	MLCC 2220−630V−105M−X7T	C14, C67, C68	3
885012207072	WURTH	MLCC 0805−25V−104M−X7R	C15, C19,C38, C48, C49, C50, C59, C78, C86, C87, C88, C89, C97, C100, C103, C120, C184, C185	18
CGA4J2X7R2A104K	TDK	MLCC 0805−25V−104M−X7R	C15, C19,C38, C48, C49, C50, C59, C78, C86, C87, C88, C89, C97, C100, C103, C120, C184, C185	18
885012207092	WURTH	MLCC 0805−50V−103M−X7R	C51, C156	2
CGA4C2C0G1H103J	TDK	MLCC 0805−50V−103M−X7R	C51, C156	2
885012208069	WURTH	MLCC 1206−25V−106K−X7R	C53, C58, C65, C79, C93, C94, C95, C134, C153, C157, C176, C187	12
CGA5L1X7R1E106K	TDK	MLCC 1206−25V−106K−X7R	C53, C58, C65, C79, C93, C94, C95, C134, C153, C157, C176, C187	12
885012207088	WURTH	MLCC 0805−50V−222M−X7R	C54, C186	2
CGA4C2C0G1H222J	TDK	MLCC 0805−50V−222J−NP0	C54, C186	2
EZPV80306MTT	Panasonic	Film Cap 800 V 30 μF PP	C64	1
885012207076	WURTH	MLCC 0805−25V−474M−X7R	C96, C99, C102	3
CGA4J2X7R1E474K	TDK	MLCC 0805−25V−474M−X7R	C96, C99, C102	3
885012207079	WURTH	MLCC 0805−25V−225M−X7R	C98, C101, C104	3
CGA4J3X7R1E225K	TDK	MLCC 0805−25V−225M−X7R	C98, C101, C104	3
885012007057	WURTH	MLCC 0805−50V−100pFK−NP0	C150, C180, C181, C182, C183, C190, C191	7
CGA4C4C0G2W101J	TDK	MLCC 0805−450V−100pFK−NP0	C150, C180, C181, C182, C183, C190, C191	7

Table 11. BILL OF MATERIALS − MAIN BOARD (continued)

Manufacturer Part Number	Manufacturer	Description	Designator	Qty
CGA5H4X7R2J222K	TDK	MLCC 1206−630V−222K−X7R	C151	1
CAA572X7T2J105M	TDK	MLCC 2220−630V−105M−X7T	C159	1
CAA572X7R1V107M	TDK	MLCC 2220−35V−107K−X7R	C160, C169	2
KCM55WC71E107MH13	MURATA	MLCC 2220−25V−107K−X7R	C160, C169	2
CGA5L1X7R1V475K160AC	TDK	MLCC 1206−35V−475K−X7R	C189	1
SZMMSZ13T1G	ON Semiconductor	Zener Diode 13 V 0.5 W, SOD−123	D2	1
SBAS16HT1G	ON Semiconductor	Switching Diode 100 V 200 mA, SOD−323	D5, D6, D8, D77, D78, D150, D164	7
NRVBA340T3G	ON Semiconductor	Schottky 40 V 3 A, SMA	D9, D163	2
MBR0540	ON Semiconductor	Schottky 40 V 0.5 A, SOD−123	D10, D11, D12, D38, D39, D41	6
ES1J	ON Semiconductor	Fast Rectifiers 600 V 1 A, SMA	D13, D14, D15, D18, D19, D25, D26	7
FFSP3065A	ON Semiconductor	SIC Diode 30 A 650 V, TO220	D20, D30, D40, D80, D81, D82, D83	7
NRVA4007T3G	ON Semiconductor	Rectifier 1000 V 1 A, SMA	D152	1
NRVBS3100T3G	ON Semiconductor	Schottky 100 V 3 A, SMC	D153, D155, D156	3
SZMMSZ6V8T1G	ON Semiconductor	Zener Diode 6.8 V 500 mW, SOD−123FL	D154	1
SZMMSZ22T1G	ON Semiconductor	Zener Diode 22 V 500 mW, SOD−123FL	D157, D162	2
7448063801	WURTH	Common Choke 1.5 mH 38 A	L1, L2	2
784778220	WURTH	SMD Inductor 7 X 7 X 3.5 mm−22 μH−1.6 A	L3, L153	2
SPM7054VT−220M−D	TDK	SMD Inductor 7 X 7 X 3.5 mm−22 μH−1.6 A	L3, L153	2
HTR−253550−181M	Magsonder	PFC Inductor 180 μH 26 A	L20, L30, L40	3
ARLDC805665C141N3B	Sunlordinc	PFC Inductor 180 μH 26 A	L20, L30, L40	3
74438343010	WURTH	Chip Inductor 2016−1 μH	L21, L31, L41	3
TFM201610ALMA1R0MTAA	TDK	Chip Inductor 2016−1 μH	L21, L31, L41	3
DFE2MCAH1R0MJ0L	MURATA	Chip Inductor 2016−1 μH	L21, L31, L41	3
SMMBT3904LT1G	ON Semiconductor	NPN Transistor 60 V 200 mA, SOT−23	Q1, Q50	2
NVHL020N090SC1	ON Semiconductor	SiC MOS 900 V 20 mR, TO−247	Q20, Q30, Q40	3
NVHL060N090SC1	ON Semiconductor	SiC MOS 900 V 60 mR, TO−247	Q60, Q62, Q70, Q72	4
NSV40200LT1G	ON Semiconductor	PNP Transistor −40 V 2.0 A, SOT−23	Q64	1
	Any	Chip resister 1206 1 MΩ−J	R1, R2, R5, R6, R24, R25	6
	Any	’Chip resister 0805 0 Ω−J	R3, R4, R22, R127, R128, R129	6
SMA25A2FR002T	SART	Chip resister 2512 2 mΩ−F	R7, R8, R113	3
ERJMS4SF2M0*	Panasonic	Chip resister 2512 2 mΩ−F	R7, R8, R113	3
	Any	Chip resister 1206 1 kΩ−J	R9, R10	2
	Any	Chip resister 0805 470 Ω−J	R11, R15, R16, R64, R99, R117, R118, R154, R155, R156	10
	Any	Chip resister 0805 1.2 kΩ−J	R12	1

Table 11. BILL OF MATERIALS − MAIN BOARD (continued)

Manufacturer Part Number	Manufacturer	Description	Designator	Qty
	Any	Chip resister 0805 10 Ω−J	R13, R112, R264	3
	Any	Chip resister 0805 12.7 kΩ−F	R14	1
	Any	Chip resister 0805 10 kΩ−J	R18, R19, R20, R21, R57, R115, R125, R134, R135, R140, R263	11
SMF25M2FR015T	SART	Chip resister 2512 15 mΩ−J	R47, R48, R49, R50, R51, R52	6
	Any	Chip resister 0805 82 kΩ−J	R53, R54, R55	3
	Any	Chip resister 1206 5.1 kΩ−J	R56, R58, R116	3
	Any	Chip resister 0805 2.2 kΩ−J	R59, R60, R61	3
	Any	Chip resister 1206 750 kΩ−J	R65, R66, R67	3
	Any	Chip resister 0805 4.75 kΩ−J	R87, R114	2
	Any	Chip resister 0805 5.1 kΩ−J	R88	1
	Any	Chip resister 0805 820 Ω−J	R89	1
	Any	Chip resister 1206 330 kΩ−J	R93, R94, R95, R141, R142, R143	6
	Any	Chip resister 1206 4.7 Ω−J	R100, R101, R104, R105, R119, R120, R123, R124, R132, R133, R137, R138, R261, R262	14
	Any	Chip resister 0805 82 kΩ−J	R126, R193, R194	3
	Any	Chip resister 0805 200 kΩ−J	R136	1
	Any	Chip resister 1206 10 kΩ−J	R139, R144	2
	Any	Chip resister 0805 3 kΩ−J	R150, R151	2
	Any	Chip resister 0805 1.5 kΩ−J	R152	1
	Any	Chip resister 1206 470 kΩ−J	R165, R166	2
ALFG2PF121	Panasonic	RELAY 33 A 250 VAC	RL1	1
B57127P0509M301	TDK	NTC 5 Ω D31	RT1	1
820423211	WURTH	Disk Varistor 320 V D20	RV1	1
B72220P3321K101V87	TDK	Disk Varistor 320 V D20	RV1	1
V20E300AUTO	Littelfuse	Disk Varistor 320 V D20	RV1	1
750344692	WURTH	Aux. Transformer EF20, 14−Pin, THT.	T150	1
NCV890100PDR2G	ON Semiconductor	IC Buck Switcher, 1.2 A, 2 MHz, SO8EP	U1, U160	2
NCP51705MNTXG	ON Semiconductor	IC SiC MOSFET Driver, Low−Side, Single 6 A,QFN24	U2, U3, U4	3
NCV78M05ABDTRKG	ON Semiconductor	IC Linear Voltage Regulator, 5 V, 500 mA,TO−252	U5	1
SZNUD3124LT1G	ON Semiconductor	IC Relay Driver, 24 V, SOT−23	U6	1
NCV1077P065G	ON Semiconductor	IC Switching Regulator, − 4.7 Ω / 800 mA Ipk : 65 kHz, DIP7	U9	1
NCV210RSQT2G	ON Semiconductor	IC Current Sense Amplifier, SC70−6	U10, U120	2
NCV78M12BDTRKG	ON Semiconductor	IC Linear Voltage Regulator, 12 V, 500 mA, TO−252	U11	1
FODM8801C	ON Semiconductor	IC Photo Coupler High Temp, MFP−4L	U50	1
NCV51460SN33T1G	ON Semiconductor	IC 3.3 V Voltage Reference, SOT−23	U161	1

Table 11. BILL OF MATERIALS − MAIN BOARD (continued)

Manufacturer Part Number	Manufacturer	Description	Designator	Qty
PTX6R6K−17025	Magsonder	Filled in aluminum box. Mounted to heat sink.	Filled in aluminum box. Mounted to heat sink.	1
ATWPPQ655462B200T	Sunlord	Filled in aluminum box. Mounted to heat sink.	Filled in aluminum box. Mounted to heat sink.	1

*The adjacent items in same shadow are optional in different manufacturer.

Table 12. BILL OF MATERIALS − PFC CONTROL BOARD

Manufacturer Part Number	Manufacturer	Description	Designator	Qty
885012007057	WURTH	MLCC 0805−50V−100pFK−NP0	C16, C30, C32, C34	4
CGA4C4C0G2W101J	TDK	MLCC 0805−450V−100pFK−NP0	C16, C30, C32, C34	4
885012207079	WURTH	MLCC 0805−25V−225M−X7R	C17	1
CGA4J3X7R1E225K	TDK	MLCC 0805−25V−225M−X7R	C17	1
885012207092	WURTH	MLCC 0805−50V−103M−X7R	C18, C25, C28, C35	4
CGA4C2C0G1H103J	TDK	MLCC 0805−50V−103M−X7R	C18, C25, C28, C35	4
885012207096	WURTH	MLCC 0805−50V−473M−X7R	C20	1
CGA4J2X7R2A473M	TDK	MLCC 0805−100V−473M−X7R	C20	1
885012207076	WURTH	MLCC 0805−25V−474M−X7R’	C21	1
CGA4J2X7R1E474K	TDK	MLCC 0805−25V−474M−X7R’	C21	1
885012207072	WURTH	MLCC 0805−25V−104M−X7R’	C22	1
CGA4J2X7R2A104K	TDK	MLCC 0805−25V−104M−X7R’	C22	1
885012007061	WURTH	MLCC 0805−50V−471J−NP0	C23, C26, C27, C36	4
CGA4C4C0G2W471J	TDK	MLCC 0805−50V−471J−NP0	C23, C26, C27, C36	4
885012207074	WURTH	MLCC 0805−25V−224M−X7R’	C24	1
CGA4J2X7R1H224K	TDK	MLCC 0805−25V−224M−X7R’	C24	1
885012207086	WURTH	MLCC 0805−50V−102M−X7R	C29, C31, C33, C40, C43, C46	6
CGA4C2C0G2A102J	TDK	MLCC 0805−100V−102M−NP0	C29, C31, C33, C40, C43, C46	6
885012207088	WURTH	MLCC 0805−50V−222M−X7R	C39, C41, C42, C44, C45, C47	6
CGA4C2C0G1H222J	TDK	MLCC 0805−50V−222J−NP0	C39, C41, C42, C44, C45, C47	6
885012207092	WURTH	MLCC 0805−50V−103M−X7R	C92	1
CGA4C2C0G1H103J	TDK	MLCC 0805−50V−103M−X7R	C92	1
885012208069	WURTH	MLCC 1206−25V−106M−X7R	C37	1
CGA5L1X7R1E106K	TDK	MLCC 1206−25V−106M−X7R	C37	1
SBAV99LT3G	ON Semiconductor	Schottky Diode 0.2 A 100 V, SOT23’	D1	1
74438343010	WURTH	Chip Inductor 2016−1 μH’	L22	1
TFM201610ALMA1R0MTAA	TDK	Chip Inductor 2016−1 μH Automotive	L22	1
DFE2MCAH1R0MJ0L	MURATA	Chip Inductor 2016−1 μH	L22	1
2V7002LT1G	ON Semiconductor	MOSFET 60 V 7.5 Ω, SOT23	Q23	1
	Any	Chip resister 0805 10 kΩ−J	R1, R39	2
	Any	Chip resister 0805 470 Ω−J	R2	1
	Any	Chip resister 1206 1 MΩ−J	R3, R4, R20, R21	4
	Any	Chip resister 0805 12.4 kΩ−F	R15, R16, R33, R34	4
	Any	Chip resister 0805 510 Ω−J	R17, R18, R19	3
	Any	Chip resister 0805 200 kΩ−J	R22	1

Table 12. BILL OF MATERIALS − PFC CONTROL BOARD (continued)

Manufacturer Part Number	Manufacturer	Description	Designator	Qty
	Any	Chip resister 0805 36 kΩ−J	R23	1
	Any	Chip resister 0805 24 kΩ−J	R26	1
	Any	Chip resister 1206 2 MΩ−J	R27, R28, R29	3
	Any	Chip resister 0805 75 kΩ−J	R30	1
	Any	Chip resister 0805 33 kΩ−J	R31	1
	Any	Chip resister 0805 39 kΩ−J	R32	1
	Any	Chip resister 0805 8.2 kΩ−F	R35	1
	Any	Chip resister 0805 18 kΩ−J	R36, R37, R38	3
	Any	Chip resister 0805 47kΩ−J	R40	1
	Any	Chip resister 0805 470Ω−J	R41, R42, R43, R44, R45, R46	6
FAN9673Q	ON Semiconductor	IC 3CH ICCM PFC Controller, QFP32	U20	1

**The adjacent items in same shadow are optional in different manufacturer.

Table 13. BILL OF MATERIALS − LLC CONTROL BOARD

Manufacturer Part Number	Manufacturer	Description	Designator	Qty
885012007057	WURTH	MLCC 0805−50V−100pFK−NP0	C52, C85, C90, C115, C116, C119, C142, C143, C146, C147	10
CGA4C4C0G2W101J	TDK	MLCC 0805−450V−100pFK−NP0	C52, C85, C90, C115, C116, C119, C142, C143, C146, C147	10
885012208069	WURTH	MLCC 1206−25V−106M−X7R	C60, C109, C111, C122, C124, C130, C135, C138, C155, C162	10
CGA5L1X7R1E106K	TDK	MLCC 1206−25V−106M−X7R	C60, C109, C111, C122, C124, C130, C135, C138, C155, C162	10
885012207086	WURTH	MLCC 0805−50V−102M−X7R	C61, C83	2
CGA4C2C0G2A102J	TDK	MLCC 0805−100V−102M−NP0	C61, C83	2
885012207076	WURTH	MLCC 0805−25V−474M−X7R	C63	1
CGA4J2X7R1E474K	TDK	MLCC 0805−25V−474M−X7R	C63	1
885012007051	WURTH	MLCC 0805−50V−10pFK−NP0	C70	1
885012007061	WURTH	MLCC 0805−50V−471J−NP0	C71, C75, C82	3
CGA4C4C0G2W471J	TDK	MLCC 0805−50V−471J−NP0	C71, C75, C82	3
885012207090	WURTH	MLCC 0805−50V−472M−X7R	C72	1
CGA4C2C0G1H472J	TDK	MLCC 0805−50V−472J−NP0	C72	1
885012207074	WURTH	MLCC 0805−25V−224M−X7R	C73	1
CGA4J2X7R1H224K	TDK	MLCC 0805−25V−224M−X7R	C73	1
CGA4J1X7R1V475K125AC	TDK	MLCC 0805−35V−475M−X7R	C74	1
885012207096	WURTH	MLCC 0805−50V−473M−X7R	C76	1
CGA4J2X7R2A473M	TDK	MLCC 0805−100V−473M−X7R	C76	1
885012007059	WURTH	MLCC 0805−50V−220pFK−NP0	C77	1
CGA4C4C0G2W221J	TDK	MLCC 0805−50V−220pFK−NP0	C77	1
885012207072	WURTH	MLCC 0805−25V−104M−X7R	C80, C110, C112, C136, C139	5

Table 13. BILL OF MATERIALS − LLC CONTROL BOARD (continued)

Manufacturer Part Number	Manufacturer	Description	Designator	Qty
CGA4J2X7R2A104K	TDK	MLCC 0805−25V−104M−X7R	C80, C110, C112, C136, C139	5
885012207092	WURTH	MLCC 0805−50V−103M−X7R	C51, C156	2
CGA4C2C0G1H103J	TDK	MLCC 0805−50V−103M−X7R	C51, C156	2
885012207079	WURTH	MLCC 0805−25V−225M−X7R	C98, C101, C104	3
CGA4J3X7R1E225K	TDK	MLCC 0805−25V−225M−X7R	C98, C101, C104	3
CGA5L1X7R1V475K160AC	TDK	MLCC 1206−35V−475K−X7R	C189	1
SZMMSZ15T1G	ON Semiconductor	Zener Diode 15 V 0.5 W,SOD−123	D1, D2	2
MBR0540	ON Semiconductor	Schottky 40 V 0.5 A,SOD−123	D10, D11, D12, D38, D39, D41	6
SBAS16HT1G	ON Semiconductor	Switching Diode 100 V 200 mA, SOD−323	D5, D6, D8, D77, D78, D150, D164	7
2V7002LT1G	ON Semiconductor	MOSFET 60 V 7.5Ω, SOT23	Q23	1
	Any	Chip resister 0805 1 kΩ−J	R62, R63	2
	Any	Chip resister 0805 220 Ω−J	R69, R90	2
	Any	Chip resister 0805 18 kΩ−J	R70	1
	Any	Chip resister 0805 5.1 kΩ−J	R71	1
	Any	Chip resister 0805 51 kΩ−J	R72	1
	Any	Chip resister 0805 200 kΩ−J	R73, R79	2
	Any	Chip resister 0805 15 kΩ−J	R74	1
	Any	Chip resister 0805 10 kΩ−J	R75, R81, R84, R85	4
	Any	N/A	R76	1
	Any	Chip resister 0805 68 kΩ−J	R77	1
	Any	Chip resister 0805 12.4 kFΩ−F	R78	1
	Any	Chip resister 0805 10 Ω−J	R80	1
	Any	Chip resister 0805 4.75 kFΩ−F	R82, R83, R91, R92	4
	Any	Chip resister 0805 2.2 kΩ−J	R86	1
	Any	Chip resister 0805 33 kΩ−J	R96	1
	Any	Chip resister 0805 47 Ω−J	R97	1
	Any	Chip resister 0805 100 kΩ−J	R98	1
	Any	Chip resister 0805 470 Ω−J	R131, R145	2
MCTE10−1801	Magsonder	Current Transformer EE10	T72	1
NCV57000DWR2G	ON Semiconductor	IC SiC MOSFET Driver, Single +4/−6 A, SOIC−16W	U16, U17, U18, U19	4
NCP4390	ON Semiconductor	IC , Secondary Side LLC Controller with Synchronous Rectifier Control, SOP−16	U60	1
NCV2003SN2T1G	ON Semiconductor	IC Amplifier, Rail−to−Rail Output, SOT−23−5L	U80	1

***The adjacent items in same shadow are optional in different manufacturer.

Table 14. BILL OF MATERIALS − POWER SUPPLY FOR THE LLC CONTROL BOARD

Manufacturer Part Number	Manufacturer	Description	Designator	Qty
CGA5H2C0G1H473JT	TDK	MLCC 1206−50V−473M−COG	C1, C6, C11, C12	4
885012208069	WURTH	MLCC 1206−25V−106M−X7R	C2, C3,C4,C7 C8,C9	6
CGA5L1X7R1E106K	TDK	MLCC 1206−25V−106M−X7R	C2, C3,C4,C7 C8,C9	6
885012207103	WURTH	MLCC 0805−50V−105M−X7R	C5, C10	2
CGA4J3X7R1H105K125AB	TDK	MLCC 0805−50V−105K−X7R	C5, C10	2
			CON1	1
			CON2	1
NSVBAT54SWT1G	ON Semiconductor	Schottky Diode, 200 mA, 30 V	D1, D3, D4, D6	4
SZMMSZ4V7T1G	ON Semiconductor	Zener Diode 4.7 V 0.5 W, SOD−123	D2, D5	2
NVMFD5C680NLT1G	ON Semiconductor	Dual N−MOS 60 V 28 mR, SO−8FL	Q1	1
	Any	Chip resister 1206 3.3 kΩ−J	R1, R2, R3, R4, R5, R6	6
	Any	Chip resister 0805 500 Ω−J	R7	1
	Any	Chip resister 0805 22 Ω−J	R8, R10	2
	Any	Chip resister 0805 18 k Ω−J	R9	1
	Any	Chip resister 0805 10 kΩ−J	R11, R12	2
	Any	Chip resister 0805 5.1 kΩ−J	R13	1
	Any	Chip resister 0805 2 kΩ−J	R14	1
750344380	WURTH	EP7, 20 V−0.1 A, Power For LLC Driver	T1, T2	2
NCL30059BDR2G	ON Semiconductor	LED Driver, High−Voltage Half−Bridge Controller	U1	1

****The adjacent items in same shadow are optional in different manufacturer.

Table 15. ANALOG CONTROL DAUGHTER BOARD

Manufacturer Part Number	Manufacturer	Description	Designator	Qty
NCV1455BDR2G	ON Semiconductor	IC Single Timer, SO8	U200, U220, U246, U247	4
FODM8801C	ON Semiconductor	Photo Coupler High Temp MFP−4L	U223, U224, U244	3
BAS16HT1G	ON Semiconductor	Switching Diode 0.2 A 100 V, SOD323	D200	1
SBAV99LT3G	ON Semiconductor	Schottky Diode 0.2 A 100 V, SOT23	D220, D240, D242	3
151051VS04000	WURTH	LED D = 5 mm THT Green	POWER, RELAY	2
151051RS11000	WURTH	LED D = 5 mm THT Red	ON	1
	Any	Chip resister 0805 1 kΩ−J	R202, R228, R240, R256	4
	Any	Chip resister 0805 2.2 kΩ−J	R203, R204	2
	Any	Chip resister 0805 2.43 kΩ−F	R222, R224	2
	Any	Chip resister 0805 12.4 kΩ−F	R223, R225, R226, R243, R244, R245	6
	Any	Chip resister 0805 20 kΩ−J	R230	1
	Any	Chip resister 0805 100 kΩ−J	R226, R241	2
	Any	Chip resister 0805 150 kΩ−J	R201	1
	Any	Potentiometer 50 kΩ 10 X 11 mm Vertical	CC, CV, VBUS	3
885012007051	WURTH	MLCC 0805−50V−10pFK−NP0	C230	1
885012207086	WURTH	MLCC 0805−50V−102M−X7R	C221, C225, C226, C242, C243	5
CGA4C2C0G2A102J	TDK	MLCC 0805−100V−102M−NP0	C221, C225, C226, C242, C243	5
885012207088	WURTH	MLCC 0805−50V−222M−X7R	C227, C250, C254	3
CGA4C2C0G1H222J	TDK	MLCC 0805−50V−222J−NP0	C227, C250, C254	3
885012207092	WURTH	MLCC 0805−50V−103M−X7R	C202, C228, C251, C253	4
CGA4C2C0G1H103J	TDK	MLCC 0805−50V−103J−NP0	C202, C228, C251, C253	4
885012207072	WURTH	MLCC 0805−25V−104M−X7R	C229, C252, C255	3
CGA4J2X7R2A104K	TDK	MLCC 0805−100V−104K−X7R	C229, C252, C255	3
885012208069	WURTH	MLCC 1206−25V−106M−X7R	C201, C203, C240	3
CGA5L1X7R1E106K	TDK	MLCC 1206−25V−106K−X7R	C201, C203, C240	3
61300421021	WURTH	Connector 2.54 mm THT Angled Dual Pin Header 10Pns	CON200	1
61301021021	WURTH	Connector 2.54 mm THT Angled Dual Pin Header 10Pns	CON30, CON60	2
	Any	Test Pin	TP_PFCO, TP_IIN, TP_VIN, TP_FSWM, TP_GND_PR, TP_GND_HV, TP_IO, TP_VO	8
	Any	Switch 1 Connecter 2 Position, 8.6 X 4.4 mm	SW1	1

*****The adjacent items in same shadow are optional in different manufacturer.

Table 16. RESONATE CAPACITOR BOARD

Manufacturer Part Number	Manufacturer	Description	Designator	Qty
CGA6P1C0G3A223JT0Y0N	TDK	MLCC 1210−1000V−223J−NP0	C3, C4, C5, C6, C7, C8, C9, C10, C11, C12, C17, C18, C19, C20, C21, C22, C23, C24, C25, C26,	20
C1210C223JBGAxxx	KEMET	MLCC 1210−630V−223J−NP0	C3, C4, C5, C6, C7, C8, C9, C10, C11, C12, C17, C18, C19, C20, C21, C22, C23, C24, C25, C26,	20
GCM32E5C2J223JX03L	Murata	MLCC 1210−630V−223J−NP0	C3, C4, C5, C6, C7, C8, C9, C10, C11, C12, C17, C18, C19, C20, C21, C22, C23, C24, C25, C26,	20

******The adjacent items in same shadow are optional in different manufacturer.

onsemi, onsemi, and other names, marks, and brands are registered and/or common law trademarks of Semiconductor Components Industries, LLC dba "**onsemi**" or its affiliates and/or subsidiaries in the United States and/or other countries. **onsemi** owns the rights to a number of patents, trademarks, copyrights, trade secrets, and other intellectual property. A listing of **onsemi**'s product/patent coverage may be accessed at www.onsemi.com/site/pdf/Patent−Marking.pdf. **onsemi** is an Equal Opportunity/Affirmative Action Employer. This literature is subject to all applicable copyright laws and is not for resale in any manner.

The evaluation board/kit (research and development board/kit) (hereinafter the "board") is not a finished product and is not available for sale to consumers. The board is only intended for research, development, demonstration and evaluation purposes and will only be used in laboratory/development areas by persons with an engineering/technical training and familiar with the risks associated with handling electrical/mechanical components, systems and subsystems. This person assumes full responsibility/liability for proper and safe handling. Any other use, resale or redistribution for any other purpose is strictly prohibited.

THE BOARD IS PROVIDED BY ONSEMI TO YOU "AS IS" AND WITHOUT ANY REPRESENTATIONS OR WARRANTIES WHATSOEVER. WITHOUT LIMITING THE FOREGOING, ONSEMI (AND ITS LICENSORS/SUPPLIERS) HEREBY DISCLAIMS ANY AND ALL REPRESENTATIONS AND WARRANTIES IN RELATION TO THE BOARD, ANY MODIFICATIONS, OR THIS AGREEMENT, WHETHER EXPRESS, IMPLIED, STATUTORY OR OTHERWISE, INCLUDING WITHOUT LIMITATION ANY AND ALL REPRESENTATIONS AND WARRANTIES OF MERCHANTABILITY, FITNESS FOR A PARTICULAR PURPOSE, TITLE, NON−INFRINGEMENT, AND THOSE ARISING FROM A COURSE OF DEALING, TRADE USAGE, TRADE CUSTOM OR TRADE PRACTICE.

onsemi reserves the right to make changes without further notice to any board.

You are responsible for determining whether the board will be suitable for your intended use or application or will achieve your intended results. Prior to using or distributing any systems that have been evaluated, designed or tested using the board, you agree to test and validate your design to confirm the functionality for your application. Any technical, applications or design information or advice, quality characterization, reliability data or other services provided by **onsemi** shall not constitute any representation or warranty by **onsemi**, and no additional obligations or liabilities shall arise from **onsemi** having provided such information or services.

onsemi products including the boards are not designed, intended, or authorized for use in life support systems, or any FDA Class 3 medical devices or medical devices with a similar or equivalent classification in a foreign jurisdiction, or any devices intended for implantation in the human body. You agree to indemnify, defend and hold harmless **onsemi**, its directors, officers, employees, representatives, agents, subsidiaries, affiliates, distributors, and assigns, against any and all liabilities, losses, costs, damages, judgments, and expenses, arising out of any claim, demand, investigation, lawsuit, regulatory action or cause of action arising out of or associated with any unauthorized use, even if such claim alleges that **onsemi** was negligent regarding the design or manufacture of any products and/or the board.

This evaluation board/kit does not fall within the scope of the European Union directives regarding electromagnetic compatibility, restricted substances (RoHS), recycling (WEEE), FCC, CE or UL, and may not meet the technical requirements of these or other related directives.

FCC WARNING − This evaluation board/kit is intended for use for engineering development, demonstration, or evaluation purposes only and is not considered by **onsemi** to be a finished end product fit for general consumer use. It may generate, use, or radiate radio frequency energy and has not been tested for compliance with the limits of computing devices pursuant to part 15 of FCC rules, which are designed to provide reasonable protection against radio frequency interference. Operation of this equipment may cause interference with radio communications, in which case the user shall be responsible, at its expense, to take whatever measures may be required to correct this interference.

onsemi does not convey any license under its patent rights nor the rights of others.

LIMITATIONS OF LIABILITY: **onsemi** shall not be liable for any special, consequential, incidental, indirect or punitive damages, including, but not limited to the costs of requalification, delay, loss of profits or goodwill, arising out of or in connection with the board, even if **onsemi** is advised of the possibility of such damages. In no event shall **onsemi**'s aggregate liability from any obligation arising out of or in connection with the board, under any theory of liability, exceed the purchase price paid for the board, if any.

The board is provided to you subject to the license and other terms per **onsemi**'s standard terms and conditions of sale. For more information and documentation, please visit www.onsemi.com.

ADDITIONAL INFORMATION

TECHNICAL PUBLICATIONS:
Technical Library: www.onsemi.com/design/resources/technical−documentation
onsemi Website: www.onsemi.com

ONLINE SUPPORT: www.onsemi.com/support
For additional information, please contact your local Sales Representative at www.onsemi.com/support/sales