XGS X-Celerator Developer Kit

EVBUM2676/D

ON Semiconductor®

www.onsemi.com

EVAL BOARD USER'S MANUAL

INTRODUCTION

The X−Celerator kit is designed to enable FPGA development around ON Semiconductor's XGS image sensor family. The kit provides a sensor HiSpi receiver example as starting point to allow for a quicker and more easy integration to standard FPGA evaluation environments. The interface example was created for a Xilinx™ UltraScale™ architecture.

The headboard can feature ON Semiconductor XGS 5000, XGS 12000 or XGS 16000 image sensor integrated on a standard High−Speed Array VITA 57.1 FPGA Mezzanine Card (FMC) with on−board power management.

IP CORE ARCHITECTURE

Reference RTL code for the HiSpi receiver (see Figure 2) is available under NDA and structured as three modular IP core blocks (deserializer, decoder and remapper) that convert the XGS HiSpi output to a AXI4 video streaming standard. These blocks are written in a flexible and generic form that is easily modified and inserted in any FPGA vendor technology or design methodology. The X−Celerator contains a ready to use block diagram example solution for each of the sensor variants, designed for the Xilinx Kintex™ UltraScale architecture.

Although the RTL IP core blocks have been validated to work on Altera (Intel) development boards, active support for the HiSpi receiver on these systems is currently not yet available.

SYSTEM OVERVIEW

Figure 1 shows the stripped XGS 12000 X−Celerator FMC headboard (78.8 x 69 mm) with protective foil on the sensor, designed with a small form factor in mind (29 x 29 mm). This is the single part that changes between the different Orderable Part Numbers (OPN's), provided in Table 1. The kit furthermore consists out of a lens mount, extension barrel, Low−pin Count (LPC) FMC cable, tripod mount and a tripod in order to enable a more user−friendly tripod configuration. The individual parts are discussed in more detail in the following subsections. Please note that these OPN's do NOT include a lens or development board.

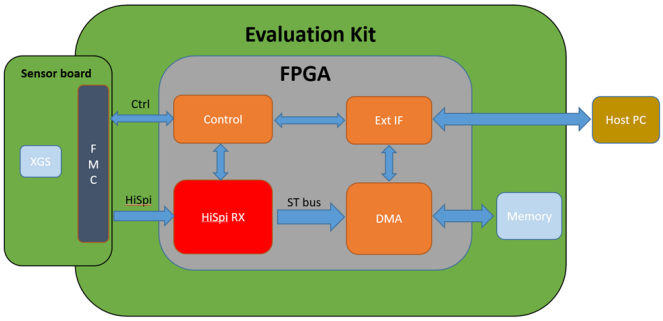

Figure 2. HiSpi RX Overview

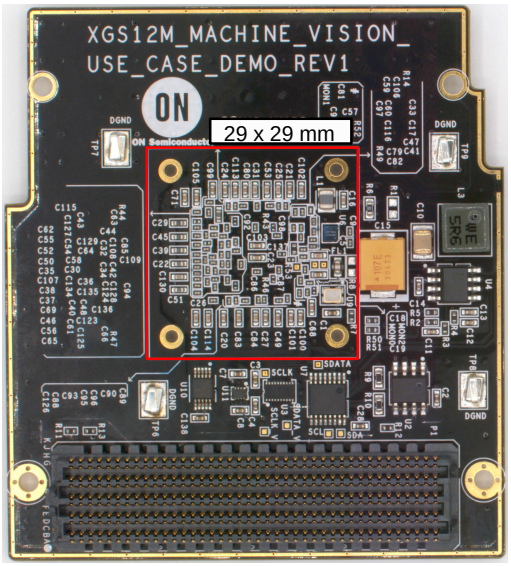

Figure 1. X−Celerator FMC Headboard

© Semiconductor Components Industries, LLC, 2019

Table 1. ORDERABLE PART NUMBERS

Part Number	Product Description
XCEL-NOIX4SE5000BL-GEVK	X−Celerator − XGS 5000 − color image sensor board, includes LPC FMC cable, lens mount, tripod mount and tripod.
XCEL-NOIX4SN5000BL-GEVK	X−Celerator − XGS 5000 − monochrome image sensor board, includes LPC FMC cable, lens mount, tripod mount and tripod.
XCEL-NOIX1SE012KBL-GEVK	X−Celerator − XGS 12000 − color image sensor board, includes LPC FMC cable, lens mount, tripod mount and tripod.
XCEL-NOIX1SN012KBL-GEVK	X−Celerator − XGS 12000 − monochrome image sensor board, includes LPC FMC cable, lens mount, tripod mount and tripod.
XCEL-NOIX1SE016KBL-GEVK	X−Celerator − XGS 16000 − color image sensor board, includes LPC FMC cable, lens mount, tripod mount and tripod.
XCEL-NOIX1SN016KBL-GEVK	X−Celerator − XGS 16000 − monochrome image sensor board, includes LPC FMC cable, lens mount, tripod mount and tripod.

Image Sensor Board

This board features one of ON Semiconductor XGS image sensors implemented on a ANSI/VITA 57.1 single width FMC standard module board with full channel (24 lanes for XGS 12000 and XGS 16000 and 16 lanes for XGS 5000) HiSpi video output, the necessary sensor control signals provided over SPI and a single 3.3 V power supply input. The ON Semiconductor's NCP6914 Mini−PMIC provides all the necessary low noise power supplies for the image sensor operations.

Figure 3 and Table 2 show the board layout and the Bill of Materials (BOM) for the X−Celerator. Detailed layout files and schematics are available under NDA.

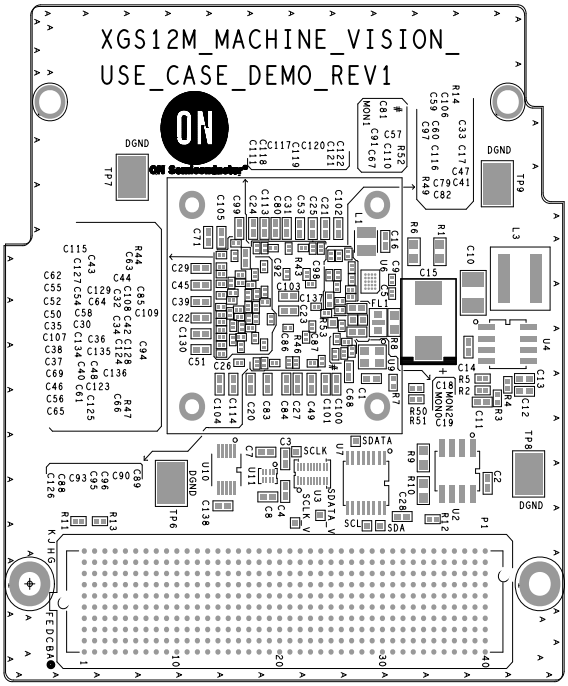

Figure 3. X−Celerator Headboard Layout

Low−pin Count (LPC) FMC Cable

Provided with the OPN's comes a VITA 57.1 FMC Samtec LPC HDR Cable, as shown in Figure 4, to connect the headboard in its tripod configuration. Specifications on the usable cables can be found on the Samtec VITA family webpage.

The provided cable (HDR−169473−01) is the LPC variant of the FMC connection, chosen for improved flexibility, proof of concept and reduced costs. The HPC variant of this cable can be chosen just as well but is not provided in this development kit OPN.

More information on LPC vs HPC can be found in the section on FMC connection pins.

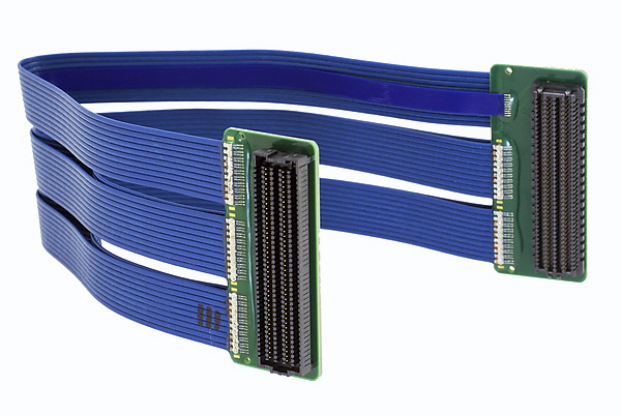

Figure 4. Low−pin Count (LPC) FMC Cable

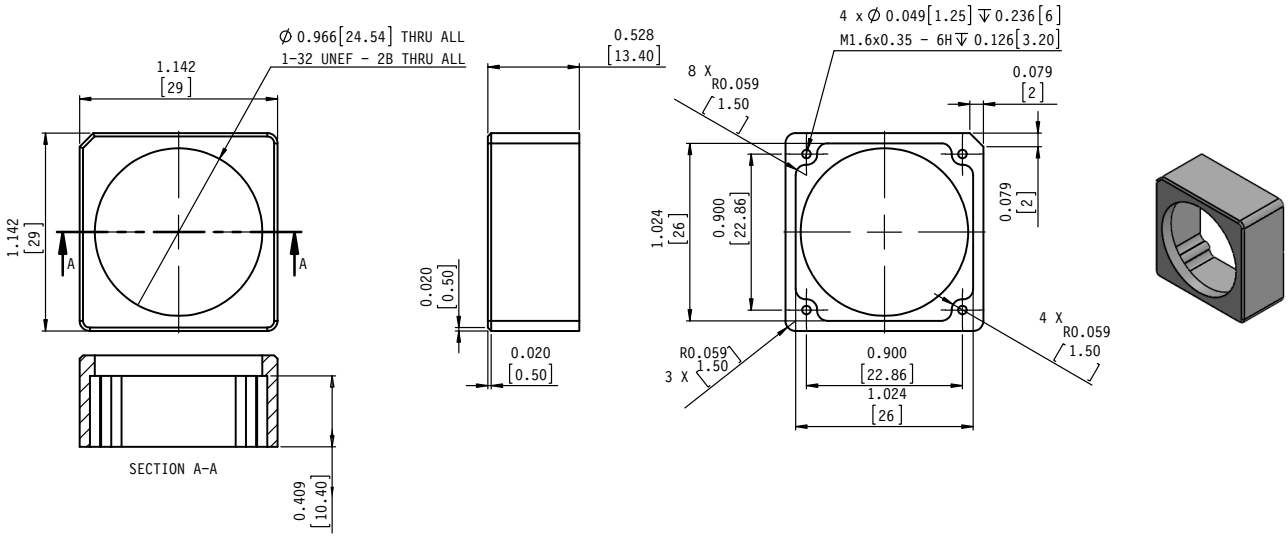

Figure 5. 29 x 29 mm C−Mount Lens Holder

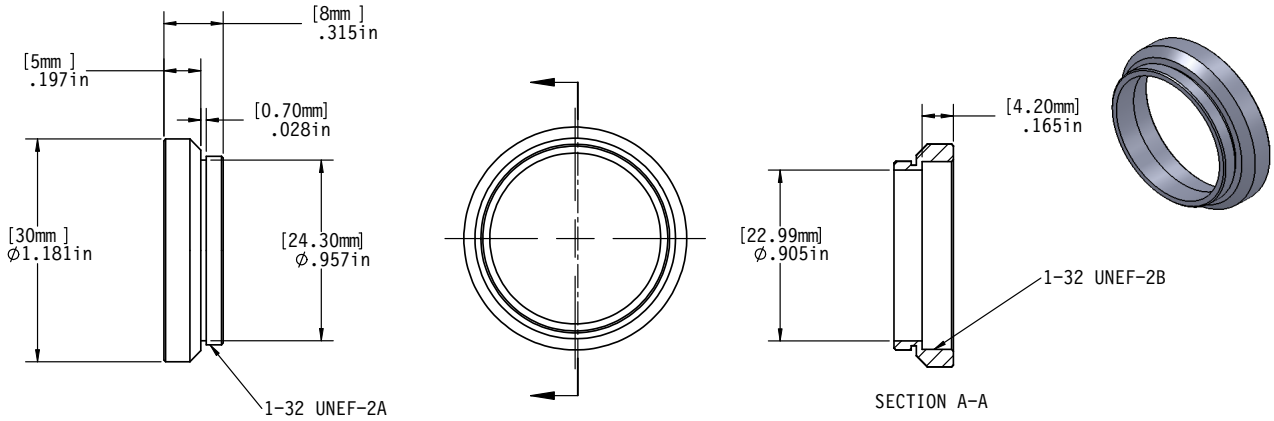

Figure 6. 5 mm Lens Holder Extension Barrel

Lens Mount

The headboard comes with a standard C−mount lens holder that is screwed onto the board. The lens mount is made of black aluminium and fits in a 29 x 29 mm^2 design, as shown in Figure 6.

The lens mount comes with a 5 mm C−Mount extender barrel, see Figure 6, to provide a focal distance of 17.4 mm to the sensor.

Tripod Mount

In order to mount the cable firmly to the provided headboard, two different aluminium mounting pieces are provided that serve a dual purpose. Both as tripod mount for the provided tripod, see Figure 7, and as FMC cable connector lock, see Figure 8, to secure your hardware connection. These pieces are connected by two M2.5 screws and nuts.

Tripod

The last part to make the development kit complete is a standard adjustable tripod to aim the image sensor in any direction that is desired.

Not Included: Lens and FPGA Development Platform

ON Semiconductor provides a suggested lens list compatible with the XGS products on the public product page. The development kit does not include a FPGA development platform as different needs require different platforms.

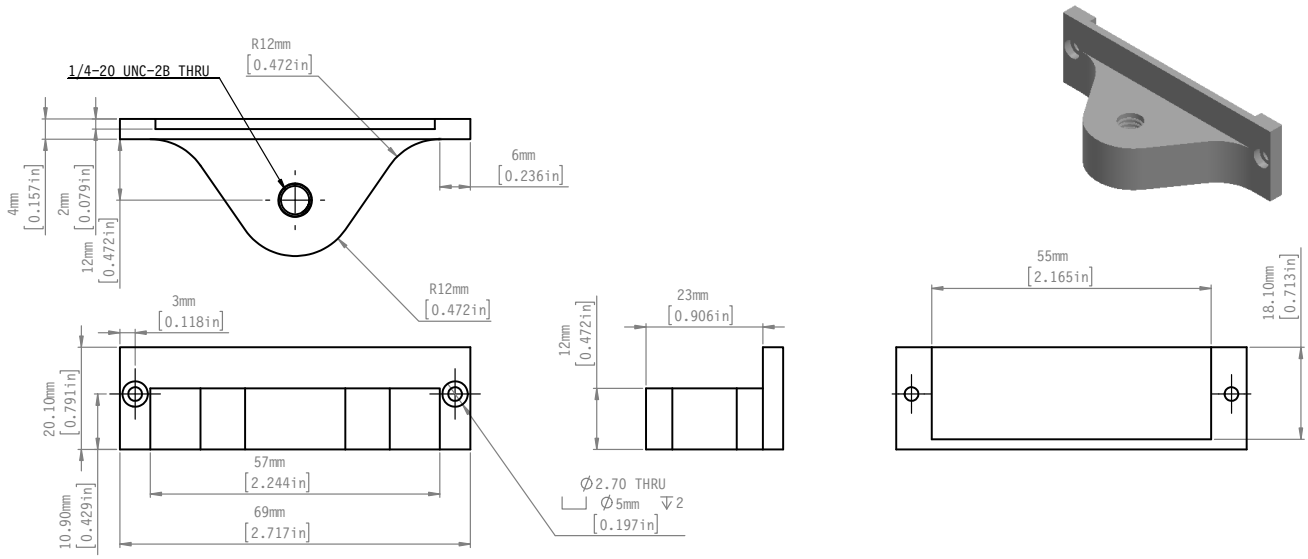

Figure 7. Frontside Tripod Mount Piece

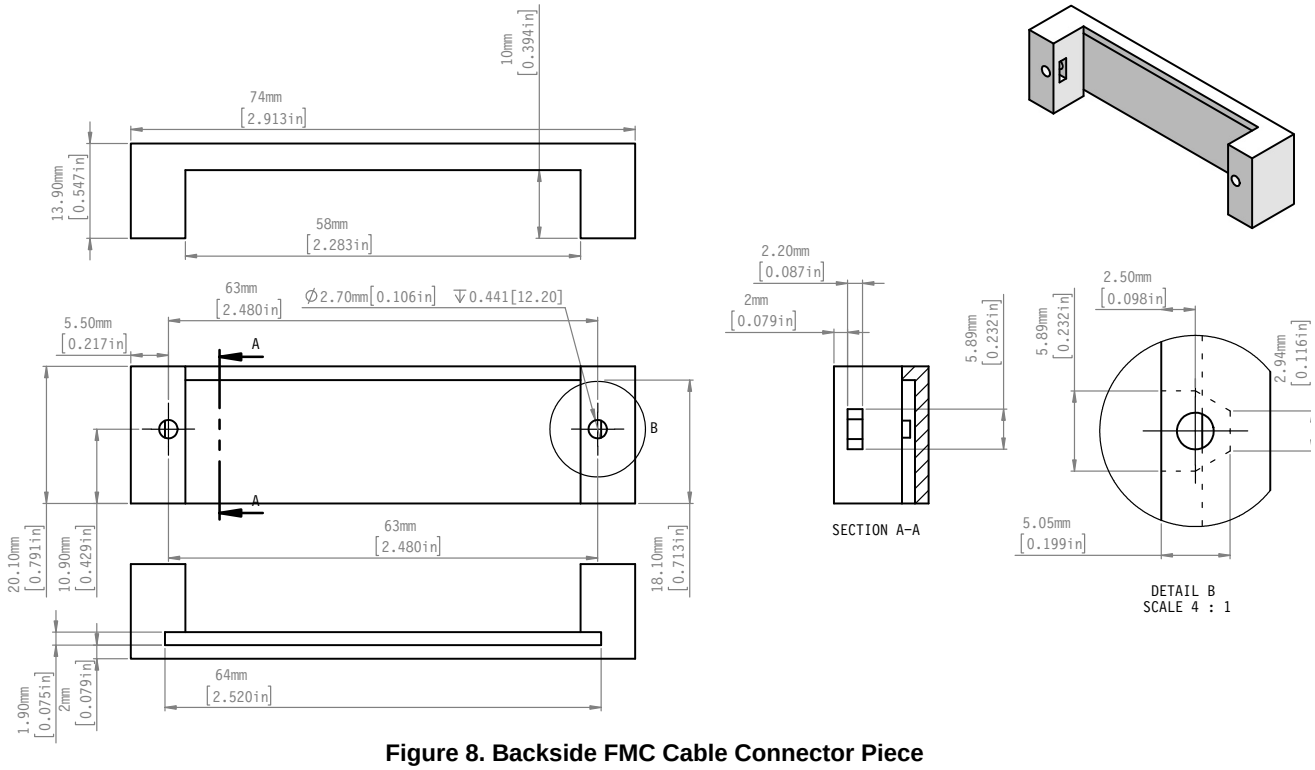

Figure 8. Backside FMC Cable Connector Piece

Table 2. X−CELERATOR BOM

Item	Qty	Part Reference	Value	Package	Description	Manufacturer	Manufacturer Part Number
1	8	C1 C2 C3 C4 C7 C8 C28 C138	100 nF	402	CAP, CERAMIC, 100 nF, 16 V, X7R, 10%, 0402	Murata	GRM155R71C104KA88D
2	11	C5 C9 C17 C33 C37 C41 C42 C69 C134 C135 C136	2.2 μF	201	CAP, CERAMIC, 2.2 μF, 10 V, X5R, 10%, 0201	Murata	GRM033R61A225KE47D
3	1	C10	100 μF	1210	CAP, CERAMIC, 100 μF, 6.3 V, X5R, 20%, 1210	Murata	GRM32ER60J107ME20L
4	1	C11	680 pF	402	CAP, CERAMIC, 680 pF, 25 V, X7R, 10%, 0402	Panasonic	ECJ0EB1E681K
5	1	C12	12 nF	402	CAP, CERAMIC, 12 nF, 16 V, X7R, 10%, 0402	Panasonic	ECJ0EB1C123K
6	1	C13	150 pF	402	CAP, CERAMIC, 150 pF, 25 V, X7R, 10%, 0402	Panasonic	ECJ0EB1E151K
7	1	C14	10 nF	402	CAP, CERAMIC, 10 nF, 50 V, X6S, 10%, 0402	TDK Corporation	C1005X6S1H103K
8	1	C15	100 μF	7361−38	CAP, TANTALUM CHIP, LOW ESR, 100 μ F, 25 V, 10%, 7361	AVX	TPSV107K025R0100
9	27	C16 C18 C19 C20 C21 C23 C24 C25 C27 C31 C49 C53 C68 C71 C80 C83 C84 C99 C100 C101 C102 C103 C104 C105 C113 C114 C130	10 μF	402	CAP, CERAMIC, 10 μF, 6.3 V, X5R, 20%, 0402	Murata	GRM155R60J106ME15D
10	6	C22 C29 C39 C43 C45 C51	4.7 μF	402	CAP, CERAMIC, 4.7 μF, 6.3 V, X5R, 20%, 0402, Automotive AEC−Q200	Taiyo Yuden	JMK105BBJ475MVHF
11	64	C26 C30 C32 C34 C35 C36 C38 C40 C44 C46 C47 C48 C50 C52 C54 C56 C57 C59 C60 C61 C62 C63 C64 C65 C66 C67 C79 C81 C82 C85 C86 C87 C88 C89 C90 C91 C92 C93 C94 C95 C96 C97 C98 C106 C107 C108 C109 C110 C111 C115 C116 C117 C118 C119 C120 C121 C122 C123 C124 C125 C126 C127 C128 C129	100 μF	201	CAP, CERAMIC, 100 nF, 10 V, X5R, 20%, 0201	Panasonic	ECJZEB1A104M
12	1	FL1	1 μF	603	IND, EMI FILTER, CHIP, FERRITE BEAD, SMD, 1 μF, 2 A, 6.3 V, 0603	Murata	NFM18PC105R0J3D
13	1	L1	1 μH	98x79x35	IND, POWER, MULTILAYER, SMD, 1.0 μH, 1.6 A, +/−20%, .098”L x .079”W x .035”H	Murata	LQM2HPN1R0MG0
14	1	L3	5.6 μH	254x262x240	IND, POWER, SMD, 5.6 μH, 6.9 A, .254”L x .262”W x .240”H	Wurth ElectroniK	74439346056
15	1	P1	HDR400−10x40−P		CONN, HEADER, SINGLE END ARRAY, 10x40, 400 PIN, 1.27 MM PITCH, ALGNMNT PINS, SMD	Samtec	ASP−134488−01
16	1	R2	24 K	402	RESISTOR, PRECISION THICK FILM CHIP, SMD, 24 K, 0.1 W, 1%, 0402, AEC−Q200 compliant	Panasonic	ERJ2RKF2402X
17	2	R3 R7	1 K	402	RESISTOR, PRECISION THICK FILM CHIP, SMD, 1 K, 0.1 W, 1%, 0402 , Automotive grade, AEC−Q200 compliant	Panasonic	ERJ−2RKF1001X

Table 2. X−CELERATOR BOM (continued)

Item	Qty	Part Reference	Value	Package	Description	Manufacturer	Manufacturer Part Number
18	1	R4	14.7 K	402	RESISTOR, PRECISION THICK FILM CHIP, SMD, 14.7 KΩ, 0.1 W, 1%, 0402, Automotive grade, AEC−Q200 compliant	Panasonic	ERJ−2RKF1472X
19	1	R5	8.06 K	402	RESISTOR, METAL THIN FILM CHIP, SMD, 8.06 K, 0.063 W, 0.1%, 0402	Panasonic	ERA2AEB8061
20	1	R6	0	603	RESISTOR, THICK FILM CHIP, SMD, 0 Ω JUMPER, 0.1 W, 5%, 0603, AEC−Q200 compliant	Panasonic	ERJ3GEY0R00V
21	2	R9 R10	10 K	603	RESISTOR, PRECISION THICK FILM CHIP, SMD, 10 K, 0.1 W, 1%, 0603	Panasonic	ERJ3EKF1002V
22	1	R11	300 K	402	RESISTOR, PRECISION THICK FILM CHIP, SMD, 300 K, 0.1 W, 1%, 0402	Panasonic	ERJ−2RKF3003
23	2	R12 R13	0	402	RESISTOR, PRECISION THICK FILM CHIP, SMD, 0 Ω, 0.1 W, 1%, 0402, Automotive grade, AEC−Q200 compliant	Panasonic	ERJ2GE0R00X
24	1	R14	0	201	RESISTOR, PRECISION THICK FILM CHIP, SMD, 0, 0.05 W, JUMPER, 0201, AEC−Q200	Panasonic	ERJ1GN0R00C
25	4	R43 R44 R46 R47	100	201	RESISTOR, PRECISION THICK FILM CHIP, SMD, 100 Ω, 0.05 W, 1%, 0201	Panasonic	ERJ1GEF1000C
26	1	R49	10 K	402	RESISTOR, THICK FILM CHIP, SMD, 10 K, 0.063 W, 5%, 0402, AEC−Q200 compliant	Panasonic	ERJ2GEJ103X
27	2	R50 R51	4.7 K	402	RESISTOR, THICK FILM CHIP, SMD, 4.7 K, 0.063 W, 5%, 0402	Panasonic	ERJ2GEJ472X
28	1	R52	0	201	RESISTOR, THICK FILM CHIP, SMD, 0 Ω JUMPER, 0.05 W, 5%, 0201	Panasonic	ERJ1GE0R00C
29	4	TP6 TP7 TP8 TP9	TSTPT−5016		CONN, TERMINAL, TEST POINT COMPACT, .015 THICK, SMT	Keystone Electronics	5016
30	1	U1	NOIX1SN012KB−LTI	LGA163	IC, SENSOR, ACTIVE−PIXEL DIGITAL IMAGE, CMOS, XGS12M, LGA163	ON Semiconductor	NOIX1SN012KB−LTI
31	1	U2	CAT24C64	SO8	IC, SERIAL EEPROM, I2C, 64 Kbit, +1.7 V TO +5.5 V, −40°C to +85°C, SO8 Narrow	ON Semiconductor	CAT24C64WI−GT3
32	1	U3	NLSV8T244	UDFN20	IC, LEVEL TRANSLATOR, NON−INVERTING, DUAL SUPPLY, 8−BIT, 0.9 V TO 4.5 V, UDFN20	ON Semiconductor	NLSV8T244MUTAG
33	1	U4	NCP3170	SO8	IC, VOLTAGE REGULATOR, 500 kHz SYNCHRONOUS BUCK CONVERTER, 4.5 V TO 18 V IN, ADJASTABLE OUT, 3 A, SO8	ON Semiconductor	NCP3170ADR2G
34	1	U6	NCP6914	WLCSP20	IC, PMIC, 5 CHANNEL, ONE DC DC CONVERTER AND 4 LDOs, 2.3 V TO 5.5 V INPUT, WLCSP20	ON Semiconductor	NCP6914AFCDT1G

Table 2. X−CELERATOR BOM (continued)

Item	Qty	Part Reference	Value	Package	Description	Manufacturer	Manufacturer Part Number
35	1	U7	PCA9654E	TSSOP16	IC, I/O EXPANDER, I2C, 8−BIT, 1 MHz, 1.65 V TO 5.5 V, TSSOP16	ON Semiconductor	PCA9654EDTR2G
36	1	U9	32 MHz		OSC, SPXO, 32 MHz, 50 ppm, SMD, 1.6 V − 3.6 V, 2.5 MM x 2.0 MM x 0.8 MM	SEIKO EPSON CORPORATION	SG−210STF 32.0000ML
37	1	U10	TMUX1104DGSR	VSSOP10	IC, PRECISION MULTIPLEXER, 4:1, LOW LEAKAGE CURRENT, 1.08 V TO 5.5 V, VSSOP10	Texas Instruments	TMUX1104DGSR
38	1	U11	NLSV2T244	UDFN8	IC, LEVEL TRANSLATOR, NON−INVERTING, DUAL SUPPLY, 2−BIT, 0.9 V TO 4.5 V, UDFN8	ON Semiconductor	NLSV2T244MUTAG

FMC CONNECTION PINS

The High−pin Count (HPC) FMC connector, see Table 3, provides maximal compatibility for the X−Celerator. This HPC connector is designed to mate with both LPC and HPC connectors on the carrier board. Table 4 demonstrates this by using only the C, D, G, H pin arrays for critical communication. Only 28 out of the 80 differential pairs on the HPC (34 on LPC) connector are being used to communicate with the sensor. The other pins are still available for additional development. For example, a display port module.

DEVWARE AS INTERFACING SOFTWARE LAYER

From DevWare version 6.0.38 onward, Devware is able to recognize and interface with FPGA boards, that contain the latest X−Celerator bitfiles. With the RADON driver (found on MyON) installed, DevWare should automatically recognize the X−Celerator on your FPGA board connected to the PC, the correct sensor INI file still needs to be selected (and downloaded from the image sensor portal) to load the latest register settings and demonstrate the best capabilities of the sensor.

Figure 9 shows a complete development platform setup using the X−Celerator development kit, a edmund optics lens (not included) and a Xilinx Kintex UltraScale FPGA KCU105 evaluation kit. Please note that for most development needs this KCU105 evaluation kit is over−qualified and cheaper options are available.

Table 3. X−CELERATOR HPC FMC CNNECTOR

Connector	Manufacturer	Part Number	Description
P1	Samtec	ASP−134488−01	CONN, HEADER, SINGLE END ARRAY, 10x40 400 PIN, 1.27 MM PITCH, ALGNMNT PINS, SMD

Table 4. FMC CONNECTOR P1 PIN DESCRIPTION

Pin No.	Dir	Function	Pin No.	Dir	Function
H16	OUT	DATA_0_P	H17	OUT	DATA_0_N
G15	OUT	DATA_2_P	G16	OUT	DATA_2_N
C14	OUT	DATA_4_P	C15	OUT	DATA_4_N
D14	OUT	DATA_6_P	D15	OUT	DATA_6_N
H13	OUT	DATA_8_P	H14	OUT	DATA_8_N
G12	OUT	DATA_10_P	G13	OUT	DATA_10_N
D11	OUT	DATA_12_P	D12	OUT	DATA_12_N
C10	OUT	DATA_14_P	C11	OUT	DATA_14_N
G9	OUT	DATA_16_P	G10	OUT	DATA_16_N
H10	OUT	DATA_18_P	H11	OUT	DATA_18_N
D8	OUT	DATA_20_P	D9	OUT	DATA_20_N
H7	OUT	DATA_22_P	H8	OUT	DATA_22_N
H31	OUT	DATA_1_P	H32	OUT	DATA_1_N
G30	OUT	DATA_3_P	G31	OUT	DATA_3_N
G27	OUT	DATA_5_P	G28	OUT	DATA_5_N
H28	OUT	DATA_7_P	H29	OUT	DATA_7_N
C26	OUT	DATA_9_P	C27	OUT	DATA_9_N
D26	OUT	DATA_11_P	D27	OUT	DATA_11_N
H25	OUT	DATA_13_P	C26	OUT	DATA_13_N
G24	OUT	DATA_15_P	G25	OUT	DATA_15_N
D23	OUT	DATA_17_P	D24	OUT	DATA_17_N
H22	OUT	DATA_19_P	H23	OUT	DATA_19_N
C22	OUT	DATA_21_P	C23	OUT	DATA_21_N
G21	OUT	DATA_23_P	G22	OUT	DATA_23_N
H4	OUT	D_CLK_2_P	H5	OUT	D_CLK_2_N
G2	OUT	D_CLK_3_P	G3	OUT	D_CLK_3_N
C35, C37	PWR	12 V FMC	C39, D36, D38, D40	PWR	3.3V FMC
F40, E39, G39, H40	PWR	VADJ (for voltage convertor)	D32	PWR	3.3V_VAUX_FMC (EEPROM)
H1	PWR	VREF_A_M2C	K1	PWR	VREF_B_M2C
J39, K40	PWR	VIO_B_M2C	H19	IN	RESET_N_VADJ
H20	IN	TRIGGER_INT_VADJ	G19	IN	TRIGGER_RD_VADJ
D17	IN	SCLK_VADJ	D18	IN	SDATA_VADJ
C18	IN	CS_N_VADJ	C19	OUT	SDATAOUT_VADJ
C30	IN	SCL (EEPROM)	C31	IN / OUT	SDA (EEPROM)
C34	IN	GA0 (EEPROM)	C35	IN	GA1 (EEPROM)

SPECIFICATIONS AND USEFUL REFERENCES

Detailed schematics, layout files, EEPROM bin content and FPGA bitfiles of the X−Celerator together with the sensor specific DevWare software can be found under NDA on the image sensor portal.

The X−Celerator headboard outline was designed according to the ANSI/VITA 57.1 standard specifications. More information about this standard can be found at: https://www.samtec.com/standards/vita/fmc

The product page of ON Semiconductor XGS 5000, XGS 12000 and XGS 16000 image sensor contains the datasheet, lens list and other resources for these sensors.

More detailed technical information on the XGS 5000, XGS 12000 and XGS 16000 image sensors can be found in their respective developer guides, namely AND90031−D, AND9878−D and AND90029−D, which are also available on the image sensor portal under standard products → XGS.

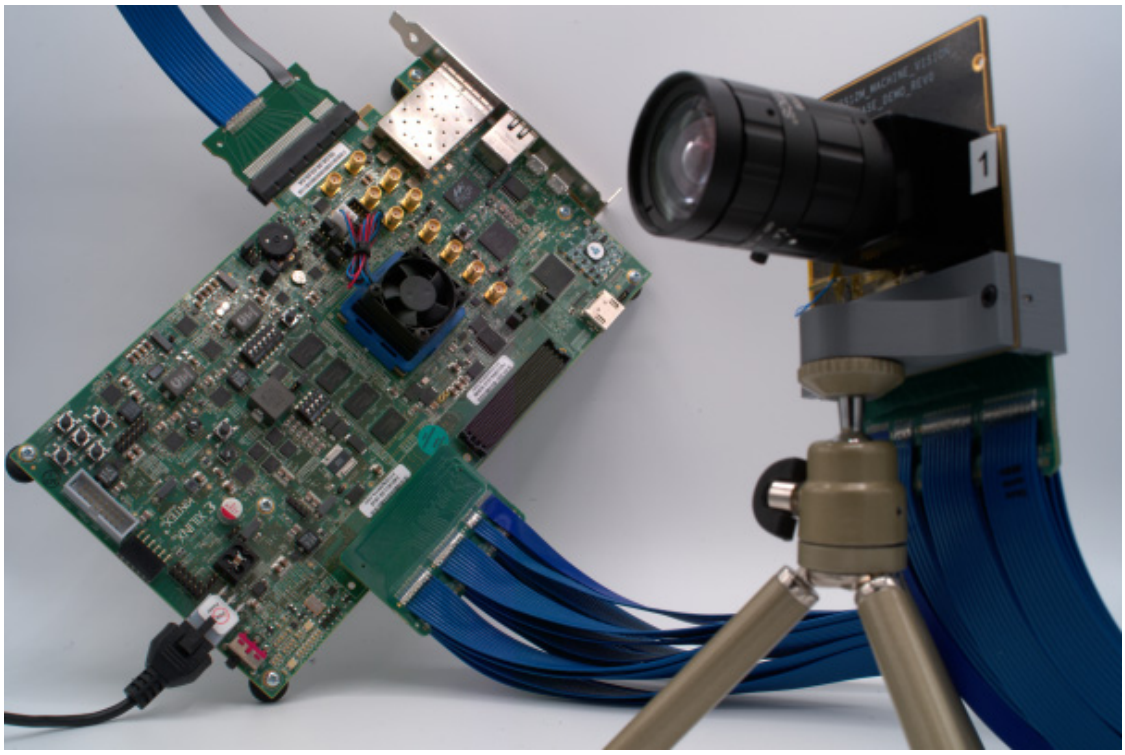

Figure 9. X−Celerator Development Kit (lens not included) Connected to a Xilinx KCU105 Development Platform (not included)

Kintex, Xilinx and UltraScale are trademarks of Xilinx.

onsemi, onsemi, and other names, marks, and brands are registered and/or common law trademarks of Semiconductor Components Industries, LLC dba "**onsemi**" or its affiliates and/or subsidiaries in the United States and/or other countries. **onsemi** owns the rights to a number of patents, trademarks, copyrights, trade secrets, and other intellectual property. A listing of **onsemi**'s product/patent coverage may be accessed at www.onsemi.com/site/pdf/Patent−Marking.pdf. **onsemi** is an Equal Opportunity/Affirmative Action Employer. This literature is subject to all applicable copyright laws and is not for resale in any manner.

The evaluation board/kit (research and development board/kit) (hereinafter the "board") is not a finished product and is not available for sale to consumers. The board is only intended for research, development, demonstration and evaluation purposes and will only be used in laboratory/development areas by persons with an engineering/technical training and familiar with the risks associated with handling electrical/mechanical components, systems and subsystems. This person assumes full responsibility/liability for proper and safe handling. Any other use, resale or redistribution for any other purpose is strictly prohibited.

THE BOARD IS PROVIDED BY ONSEMI TO YOU "AS IS" AND WITHOUT ANY REPRESENTATIONS OR WARRANTIES WHATSOEVER. WITHOUT LIMITING THE FOREGOING, ONSEMI (AND ITS LICENSORS/SUPPLIERS) HEREBY DISCLAIMS ANY AND ALL REPRESENTATIONS AND WARRANTIES IN RELATION TO THE BOARD, ANY MODIFICATIONS, OR THIS AGREEMENT, WHETHER EXPRESS, IMPLIED, STATUTORY OR OTHERWISE, INCLUDING WITHOUT LIMITATION ANY AND ALL REPRESENTATIONS AND WARRANTIES OF MERCHANTABILITY, FITNESS FOR A PARTICULAR PURPOSE, TITLE, NON−INFRINGEMENT, AND THOSE ARISING FROM A COURSE OF DEALING, TRADE USAGE, TRADE CUSTOM OR TRADE PRACTICE.

onsemi reserves the right to make changes without further notice to any board.

You are responsible for determining whether the board will be suitable for your intended use or application or will achieve your intended results. Prior to using or distributing any systems that have been evaluated, designed or tested using the board, you agree to test and validate your design to confirm the functionality for your application. Any technical, applications or design information or advice, quality characterization, reliability data or other services provided by **onsemi** shall not constitute any representation or warranty by **onsemi**, and no additional obligations or liabilities shall arise from **onsemi** having provided such information or services.

onsemi products including the boards are not designed, intended, or authorized for use in life support systems, or any FDA Class 3 medical devices or medical devices with a similar or equivalent classification in a foreign jurisdiction, or any devices intended for implantation in the human body. You agree to indemnify, defend and hold harmless **onsemi**, its directors, officers, employees, representatives, agents, subsidiaries, affiliates, distributors, and assigns, against any and all liabilities, losses, costs, damages, judgments, and expenses, arising out of any claim, demand, investigation, lawsuit, regulatory action or cause of action arising out of or associated with any unauthorized use, even if such claim alleges that **onsemi** was negligent regarding the design or manufacture of any products and/or the board.

This evaluation board/kit does not fall within the scope of the European Union directives regarding electromagnetic compatibility, restricted substances (RoHS), recycling (WEEE), FCC, CE or UL, and may not meet the technical requirements of these or other related directives.

FCC WARNING − This evaluation board/kit is intended for use for engineering development, demonstration, or evaluation purposes only and is not considered by **onsemi** to be a finished end product fit for general consumer use. It may generate, use, or radiate radio frequency energy and has not been tested for compliance with the limits of computing devices pursuant to part 15 of FCC rules, which are designed to provide reasonable protection against radio frequency interference. Operation of this equipment may cause interference with radio communications, in which case the user shall be responsible, at its expense, to take whatever measures may be required to correct this interference.

onsemi does not convey any license under its patent rights nor the rights of others.

LIMITATIONS OF LIABILITY: **onsemi** shall not be liable for any special, consequential, incidental, indirect or punitive damages, including, but not limited to the costs of requalification, delay, loss of profits or goodwill, arising out of or in connection with the board, even if **onsemi** is advised of the possibility of such damages. In no event shall **onsemi**'s aggregate liability from any obligation arising out of or in connection with the board, under any theory of liability, exceed the purchase price paid for the board, if any.

The board is provided to you subject to the license and other terms per **onsemi**'s standard terms and conditions of sale. For more information and documentation, please visit www.onsemi.com.

ADDITIONAL INFORMATION

TECHNICAL PUBLICATIONS:
Technical Library: www.onsemi.com/design/resources/technical−documentation
onsemi Website: www.onsemi.com

ONLINE SUPPORT: www.onsemi.com/support
For additional information, please contact your local Sales Representative at www.onsemi.com/support/sales