NCL2801LED2GEVB

Deep Dimming LED Driver 150 W Evaluation Board User's Manual

ON Semiconductor®

www.onsemi.com

EVAL BOARD USER'S MANUAL

OVERVIEW

This manual covers the specification, theory of operation, testing and construction of the NCL2801LED2GEVB demo board. This demo board uses NCL2801 as the front end PFC and NCP13992 LLC for the output converter which demonstrates a 150W LED driver. This LED driver features deep dimming with a 0−10 V interface.

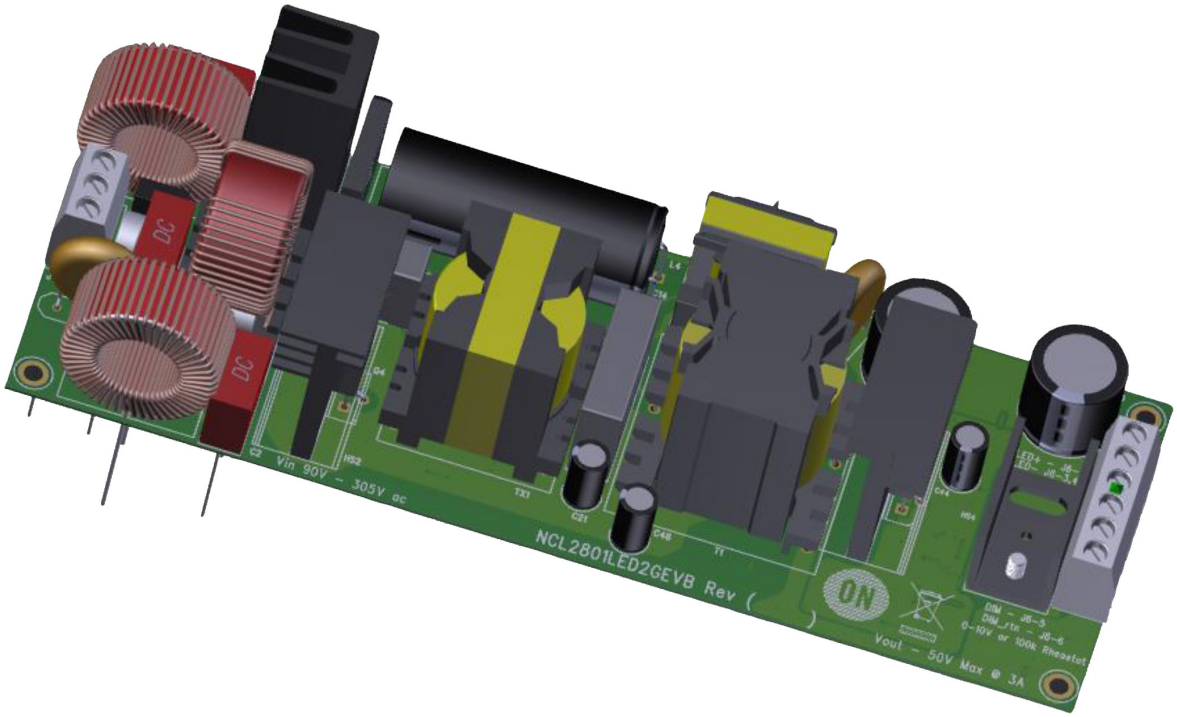

Figure 1.

© Semiconductor Components Industries, LLC, 2019

March, 2020 − Rev. 1

Publication Order Number:
EVBUM2643/D

SPECIFICATIONS

Input voltage	90 Vac – 305 Vac	
Output Voltage	50 Vdc	Nom.
Output Current	1.5 A	Max
Output Ripple	± 5%	Max
Efficiency	94%	Max
Switching Frequency	85 kHz − 140 kHz	
Dimming Interface	0 – 10 V	
Dimming Range	0.3% − 100%	
PCB Size	180 mm × 65 mm	

The key features of this demo board include:

- High Efficiency
- CrM PFC
- LLC Half Bridge
- Dual Dimming Control
- Low Standby Power
- Integrated Thermal Shutdown and UVLO

THEORY OF OPERATION

Overview

The NCL2801LED2GEVB has 2 converters. The front end converter is based on the NCL2801 PFC controller and the NCP13992 LLC controller regulates the output current to the LEDs. The NCP13992 has hardware handshaking with the NCL2801 to control no load power. At startup, the NCL13992 provides V_{CC} to the NCL2801 while also monitoring the HVDC from the voltage divider that sets the regulated boost voltage. If the boost voltage does not come into regulation within 200 ms, the NCP13992 turns off V_{CC} to the NCL2801. LLC converters work best when the input and output voltage are within a narrow range. The PFC provides the regulated voltage for the LLC input.

PFC

The front end converter is a CrM boost converter based on the NCL2801 PFC controller. This controller is optimized for high power factor and low THD over a broad range of line voltage and loads. The NCL2801 is designed to control high power factor boost converters. This description will focus on aspects which have been optimized to provide very low THDi and high efficiency.

The circuit operates in Critical Conduction Mode (CrM) for high loads, and transitions to Discontinuous Mode at lighter loads by forcing a dead time. This innovative Valley Count Frequency Fold−back method reduces the switching frequency while preserving the benefits of traditional CrM operation. The start of the next switching cycle is timed to the power MOSFET drain voltage ringing after the end of demagnetization which improves efficiency by switching at the valley. Internal circuity allows near−unity power factor even when the switching frequency is reduced. Introducing delay lowers the switching frequency and can improve efficiency under certain load conditions. Unlike typical CrM boost converters based on voltage mode control, the NCL2801 utilizes current mode control providing more precise operation. A multiplier is required to condition the envelope of the input current waveform. This IC features a novel multiplier design to deliver very low input current THDi over a broad power range. An offset is introduced to the output of the multiplier to compensate for non−ideal nature of the process. This function maintains sinusoidal input current waveform especially near the zero crossings of the applied input. Line Feedforward compensation adjusts the gain of the controller to improve wide range control. Gain is reduced at high input voltage and increased when the applied voltage drops to a lower level. This gain change maintains the output of the error amplifier, or VCTR, in a more desirable operating range away from low level noise and high level clipping. The gain change occurs in the unused input voltage band between 150 and 180 Vac. The change is clearly visible by monitoring VCTR while applied voltage passes through this range. Range change has no effect while operating in typical global mains voltage ranges. High power factor converters use low loop bandwidth to maintain high PF and low THDi performance. As such, response to input voltage or output load changes is typically slow and suffers large deviation from the regulated value. The NCL2801 features a Dynamic Response Enhancer (DRE) which quickly restores the control loop to the required range in response to changes in power. DRE maintains the output voltage even during an extreme zero to 100% load change. The DRE function is also active during initial startup to speed the process of charging the output capacitor. This DRE function allows use of smaller and lower cost output capacitors in place of larger values often used to mitigate the effects of load changes. Two Over Voltage Protection (OVP) functions are included in this version of NCL2801. The first OVP activates at 105% of nominal output voltage and gradually reduces on−time to zero. This reduces the power processing gradually over a period of time avoiding erratic control of the output voltage. This function typically manages events like rapid changes in applied voltage or load. If the output voltage continues to

rise to 107% of nominal, a second OVP function stops all switching to avoid a run−away situation. Switching resumes when the output voltage returns to normal. The OVP functions can be observed during initial startup and for large reductions in output load. The CS pin links the switch current to the boost control function. This pin also provides over current protection on a cycle by cycle basis. A programming feature is also managed by the CS pin. At initial power up, the NCL2801 outputs a current through the CS pin to read a resistor placed on the circuit board. A lookup table links the measured resistance to one of six levels. Resistance below 50 nominal is interpreted as a shorted pin, or assembly fault which stops the converter from operating. Nominal impedances of 150, 330, 620, and 1 k are linked to one of four thresholds determining when the control function changes from CrM to DCM operation. A resistance measurement greater than about 1.3 k nominal is considered an open circuit, or assembly fault which disables the converter. This feature allows easy configuration of the operating mode and detects faults on the circuit board. This EVB is fitted with 150 which invokes the lowest CrM to DCM threshold.

LLC Power Stage

The power stage is a resonant LLC half bridge. The NCP13992 controls the output by controlling the switching frequency so the output duty cycle is 50%. The NCP13992 operates in current mode so the frequency is slaved to the primary current. Current control has similar effects in LLC converters has as other current controlled converters:
1) Simplified loop stability 2) Inherent overload protection 3) Stable frequency operation. LLC converters operate at a fixed duty cycle like most resonant converters. Increasing frequency reduces the output current but there are limits to the upper frequency operation. As the load approaches zero, the NCP13992 enters skip modes to regulate the output voltage.

The LLC delivers maximum output at its lowest operating frequency. There is an on time limiter which is hard coded into the NCP13992. The on time limit is selectable by choosing the desired suffix in the part number. The power component values are chosen to work at the frequency limits of the controller.

HV Start

The NCP13992 supplies its own V_{CC} at startup. Simultaneously it turns on the NCL2801 to produce boost voltage. The LLC power stage begins operation when the boost voltage is high enough and supplies V_{CC} power to the NCP13992 and NCL2801 from the bootstrap winding on the power transformer. The bootstrap voltage is regulated by Q5 to about 15 V because the bootstrap voltage is about 25 V in normal operation. The bootstrap voltage needs to be higher than needed so that the V_{CC} power does not reach UVLO during extreme light load operation when the power stage is in skip mode.

Dimming

In order to avoid flicker issues caused by skip mode operation, this deep dimming design uses 2 current control loops. The main loop controls current through the normal feedback control to the NCP13992. Below a predetermined threshold (20% in this case), the second control loop sets the current using a linear regulator made of Q3 & U9. While the main loop is in control, Q3 is saturated for maximum efficiency. Once Q3 enters the active mode and controls the LED current, Q7 regulates the voltage across Q3 to optimize power losses while allowing Q3 to be in the linear region and provide a very stable output current even though the LLC is in skip mode.

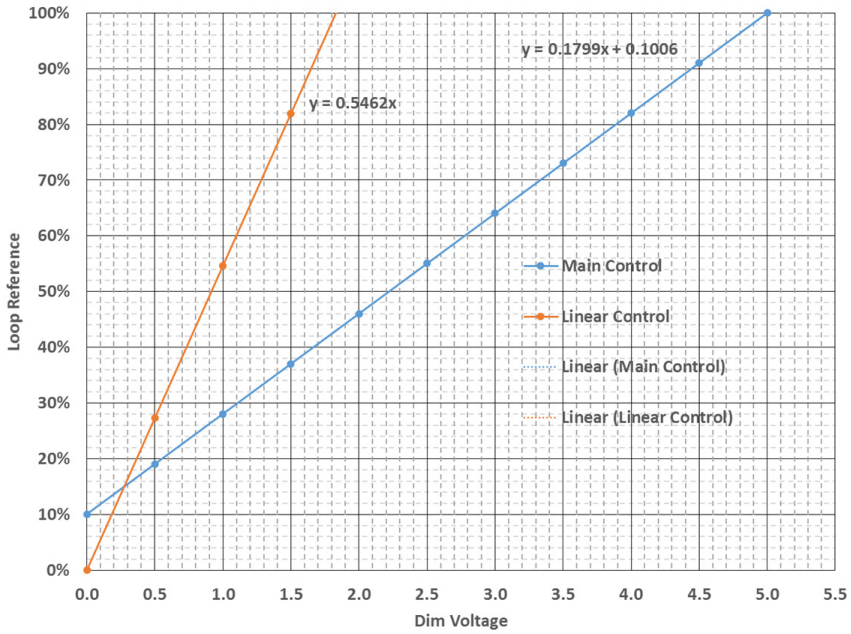

Figure 2. Line Dim Curve

The blue line shows the internal dim voltage (note this is **not** the external 0−10 V dim signal) vs the normalized output current for the main output control. The orange line represents the internal dim voltage vs normalized output for the linear control. For any given dim setting, the lower setting of the 2 control loops will set the output current. As you can see, the blue line (main loop) sets the output current above 20% load and the orange line (linear loop) sets the current below 20%. This dual mode control provides deep stable dimming while maximizing efficiency for higher output loads.

PROTECTION

OVP/Thermal Protection

The thermal protection is built into the NCP13992 and shuts down the NCP13992 when the die temperature exceeds 150°C. An NTC can be connected to pin 7 to program the thermal protection. Pulling up pin 7 through a Zener diode is a good way to set the OVP on the primary side. The primary V_{CC} winding is the image of the output voltage through the turns ratio of the power transformer. This is a convenient way to set the OVP threshold.

SCHEMATIC

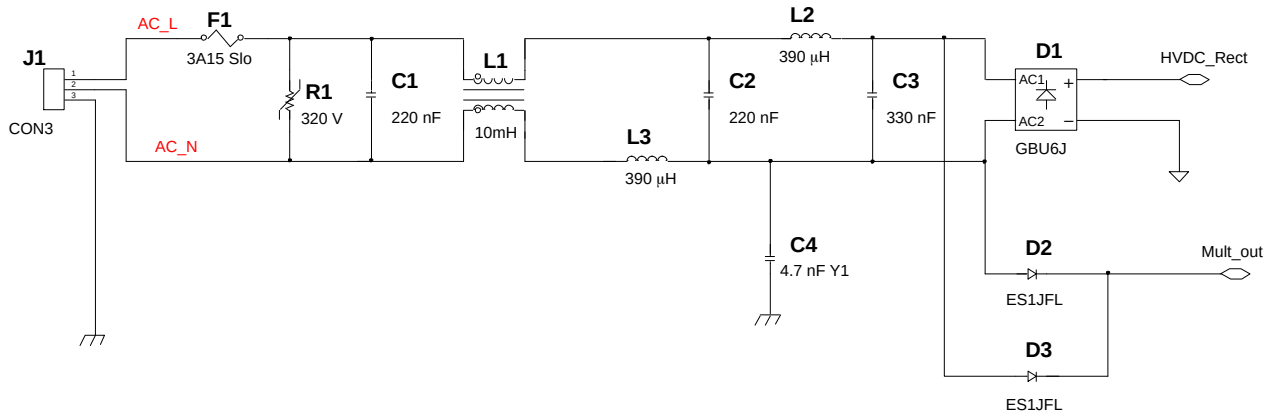

Figure 3. Input Curcuit

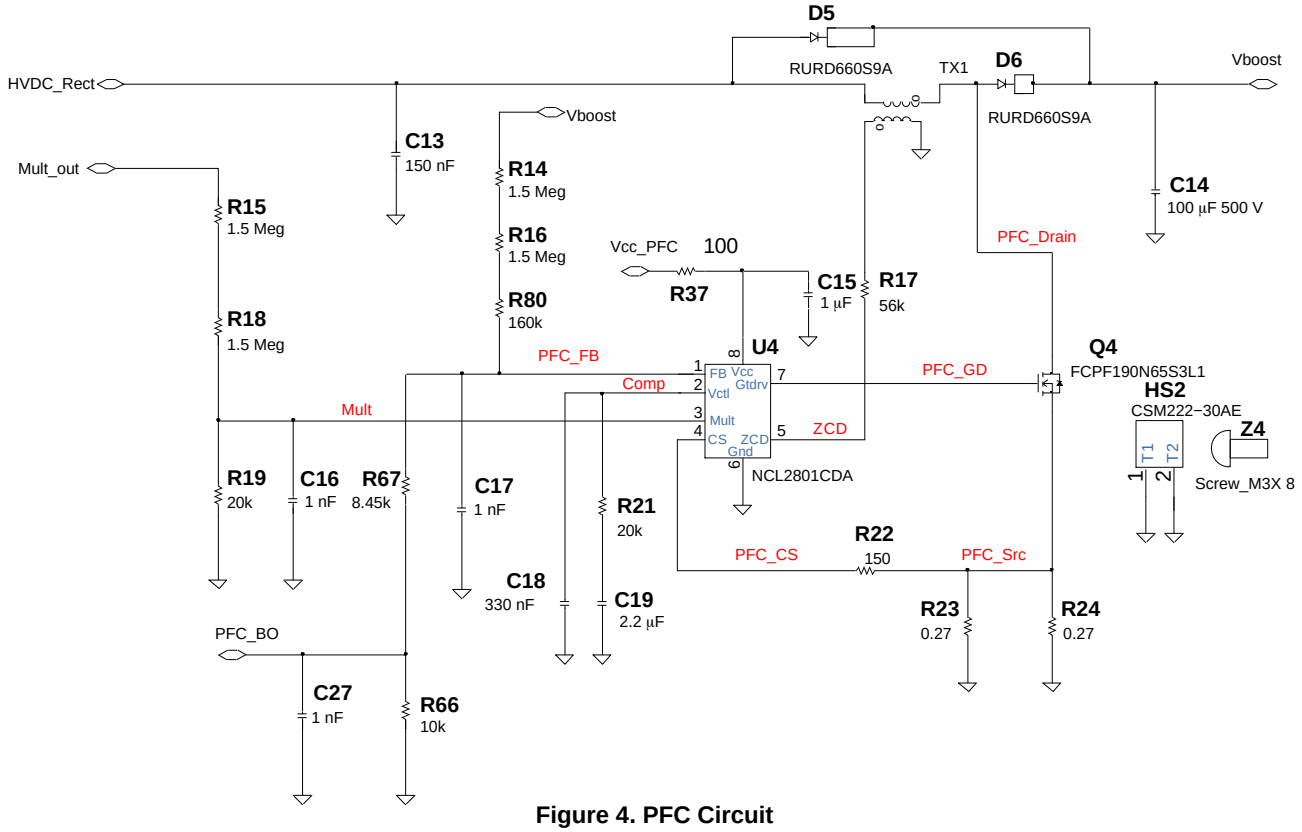

Figure 4. PFC Circuit

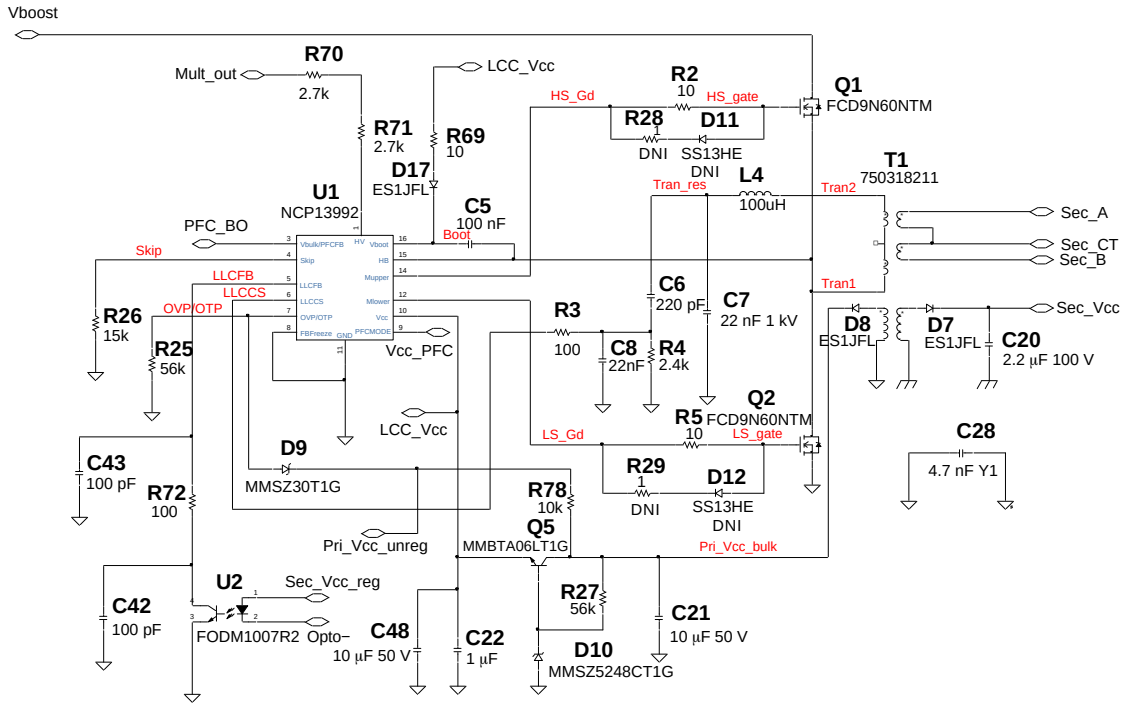

Figure 5. Power Stage

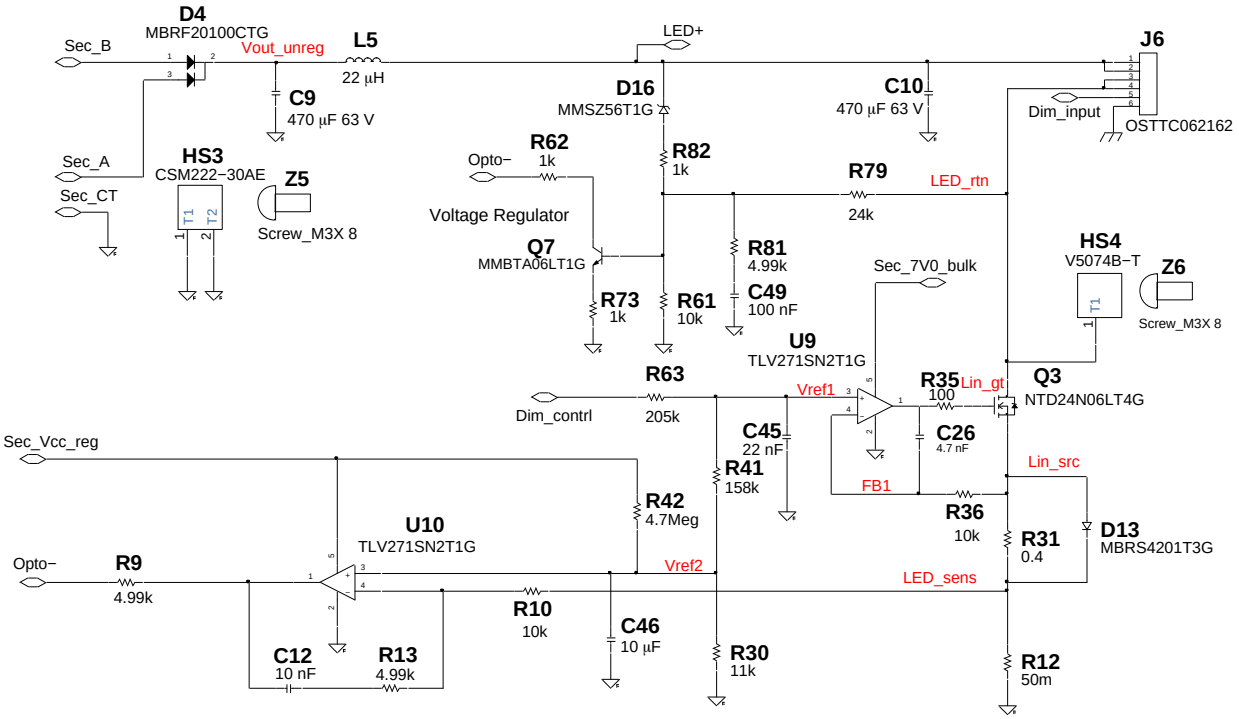

Figure 6. Output Circuit

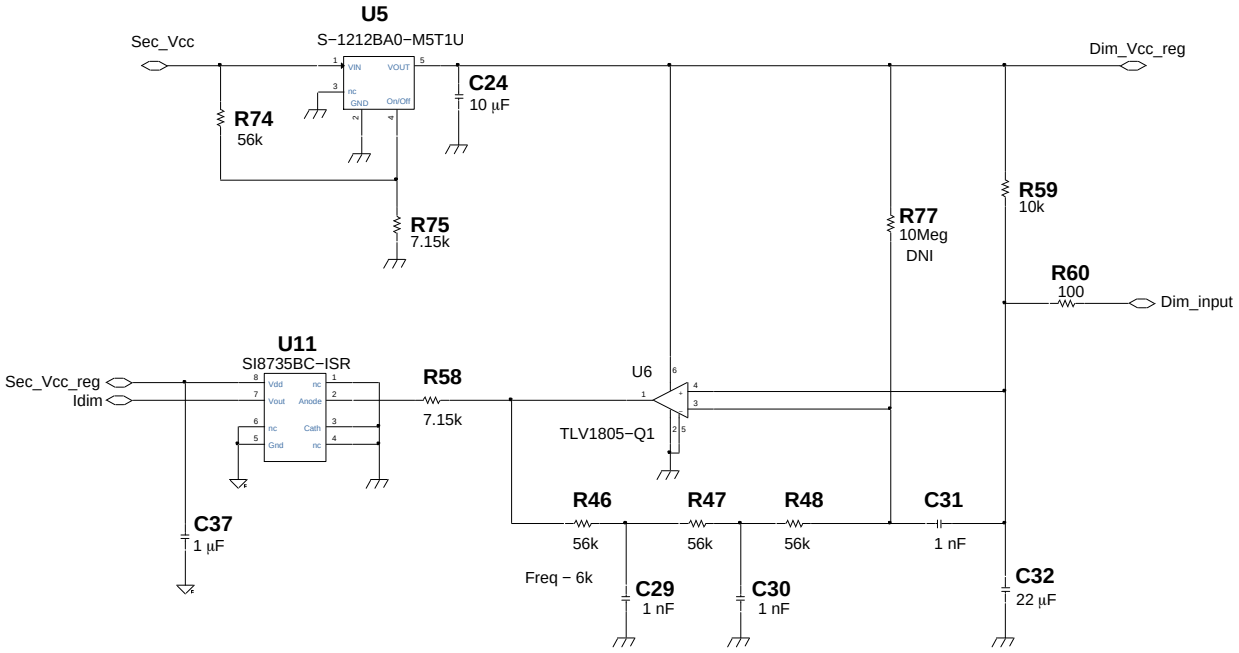

Figure 7. Dim Interface Circuit

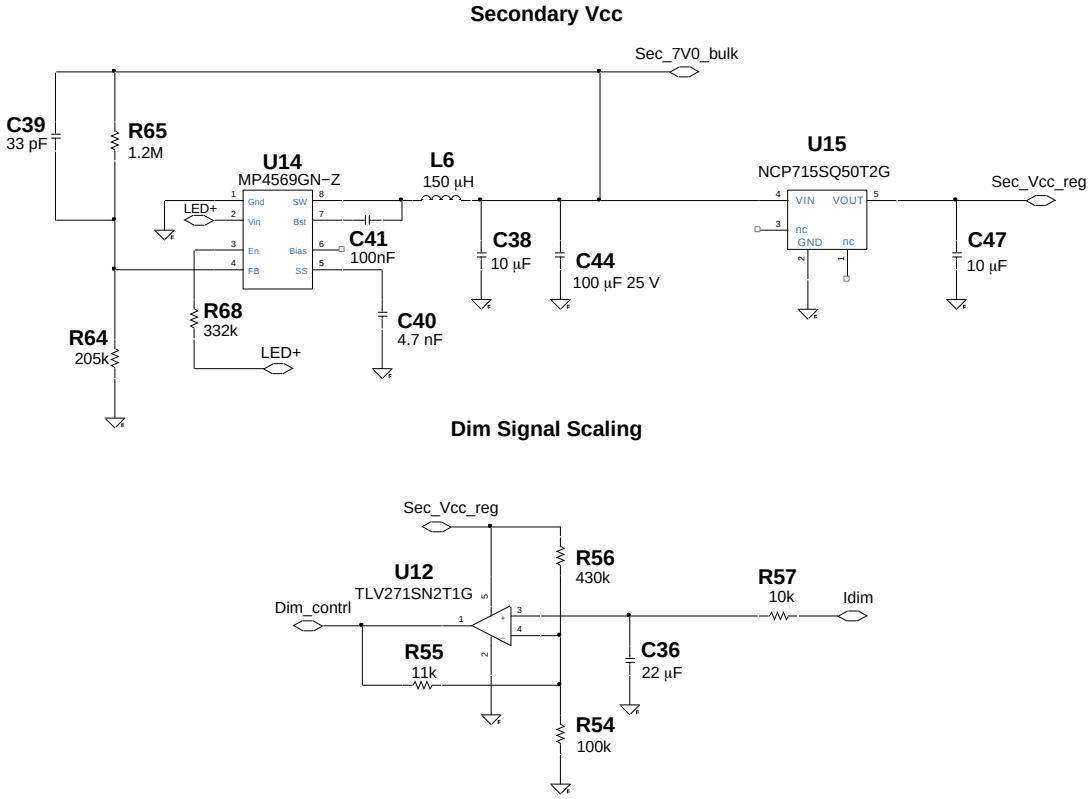

Figure 8. Secondary Dim Interface Circuit

BILL OF MATERIAL

Quantity	Reference	Part	Distributor	Dist. P/N	Manufacturer	Mfr_PN	Insert	Safety Controlled
2	C1,C2	220nF	Digikey	732−5738−ND	Wurth	890334024002	Yes	Yes
1	C3	330nF	Digikey	732−5739−ND	Wurth	890334024003CS	Yes	Yes
2	C4,C28	4.7nF Y1	Digikey	490−9395−ND	Murata	DE1E3KX472MB4BP01F	Yes	Yes
3	C5,C41, C49	100nF	Digikey	1276−1001−1−ND	Samsung	CL05B104KO5NNNC	Yes	No
1	C6	220pF	Digikey	311−1504−1−ND	Yageo	CC1206JKNPOCBN221	Yes	No
1	C7	22nF 1kV	Digikey	495−7325−ND	Epcos	B32683A0223K000	Yes	No
2	C8,C45	22nF	Digikey	732−7547−1−ND	Wurth	885012205052	Yes	No
2	C9,C10	470uF 63V	Digikey	493−1647−ND	Nichicon	UHE1J471MHD6	Yes	No
1	C12	10nF	Digikey	1276−1028−1−ND	Samsung	1276−1028−1−ND	Yes	No
1	C13	150nF	Digikey	732−11835−ND	Wurth	890303325008CS	Yes	No
1	C14	100uF 500V	Digikey	1189−4273−ND	Rubycon	500LXW100MEFR18X45	Yes	No
2	C15,C22	1uF	Digikey	311−1886−1−ND	Yageo	CC0805KKX7R9BB105	Yes	No
6	C16,C17, C27,C29, C30,C31	1nF	Digikey	732−7539−1−ND	Wurth	885012205044	Yes	No
1	C18	330nF	Digikey	732−7968−1−ND	Wurth	885012206049	Yes	No
1	C19	2.2uF	Digikey	732−7665−1−ND	Wurth	885012207052	Yes	No
1	C20	2.2uF 100V	Digikey	445−12947−1−ND	TDK	CGA5L3X7S2A225M160AB	Yes	No
2	C21,C48	10uF 50V	Digikey	493−15578−ND	Nichicon	UMV1H100MFD	Yes	No
4	C24,C38, C46,C47	10uF	Digikey	1276−6641−1−ND	Samsung	CL31B106MOHNNNE	Yes	No
2	C26,C40	4.7nF	Digikey	311−3070−1−ND	Yageo	AC0402KRX7R8BB472	Yes	No
2	C32,C36	22uF	Digikey	1276−7076−1−ND	Samsung	CL10A226MO7JZNC	Yes	No
1	C37	1uF	Digikey	1276−1942−1−ND	Samsung	CL10B105KA8NFNC	Yes	No
1	C39	33pF	Digikey	311−1020−1−ND	Yageo	CC0402JRNPO9BN330	Yes	No
2	C42,C43	100pF	Digikey	732−7533−1−ND	Wurth	885012205038	Yes	No
1	C44	100uF25V	Digikey	493−1548−ND	Nichicon	UHE1E101MED	Yes	No
1	D1	GBU6J	Digikey	GBU6JFS−ND	ON Semiconductor	GBU6J	Yes	Yes
5	D2,D3,D7, D8,D17	ES1JFL	Fairchild	ES1JFLCT−ND	Fairchild	ES1JFL	Yes	No
1	D4	MBRF20100C TG	Digikey	MBRF20100CTGOS−ND	ON Semiconductor	MBRF20100CTG	Yes	No
2	D5,D6	RURD660S9A	Digikey	RURD660S9ACT−ND	ON Semiconductor	RURD660S9A	Yes	No
1	D9	MMSZ30T1G	ON Semiconductor	MMSZ30T1GOSCT−ND	ON Semiconductor	MMSZ30T1G	Yes	No
1	D10	MMSZ5248CT 1G	ON Semiconductor	MMSZ5248CT1GOSCT−N D	ON Semiconductor	MMSZ5248CT1G	Yes	No
2	D11,D12	SS13HE	Fairchild	SS13HECT−ND	Fairchild	SS13HE	DNI	No
1	D13	MBRS4201T3 G	Fairchild	MBRS4201T3GOSCT−ND	Fairchild	MBRS4201T3G	Yes	No
1	D16	MMSZ56T1G	ON Semiconductor	MMSZ56T1GOSCT−ND	ON Semiconductor	MMSZ56T1G	Yes	No
1	F1	3A15 Slo	Digikey	F6803−ND	Littelfuse	36913150440	Yes	Yes
1	HS1	HS388	Digikey	HS388−ND	Aavid	581102B02500G	Yes	No
2	HS2,HS3	CSM222−30A E	Digikey	CSM222−30AE−ND	Ohmite	CSM222−30AE	Yes	No
1	HS4	V5074B−T	Digikey	AE10804−ND	Assman	V5074B−T	Yes	No
1	J1	CON3	Digikey	732−2027−ND	Wurth	691101710003	Yes	No
1	J6	OSTTC062162	Digikey	ED2613−ND	On Shore Technology Inc.	OSTTC062162	Yes	No
1	L1	10mH	Digikey	732−1452−ND	Wurth	744824310	Yes	Yes
2	L2,L3	390uH	Digikey	732−1433−ND	Wurth	7447071	Yes	Yes
1	L4	100uH	Digikey	750317957	Wurth	750317957	Yes	No
1	L5	22uH	Digikey	732−1211−1−ND	Wurth	744771122	Yes	No

BILL OF MATERIAL (continued)

Quantity	Reference	Part	Distributor	Dist. P/N	Manufacturer	Mfr_PN	Insert	Safety Controlled
1	L6	150uH	Digikey	732−10761−1−ND	Wurth	74404043151A	Yes	No
2	Q1,Q2	FCD9N60NTM	ON Semiconductor	FCD9N60NTMCT−ND	ON Semiconductor	FCD9N60NTM	Yes	No
1	Q3	NTD24N06LT4G	ON Semiconductor	NTD24N06LT4GOSCT−ND	ON Semiconductor	NTD24N06LT4G	Yes	No
1	Q4	FCPF190N65S3L1	ON Semiconductor	FCPF190N65S3L1−ND	ON Semiconductor	FCPF190N65S3L1	Yes	No
2	Q5,Q7	MMBTA06LT1G	ON Semiconductor	MMBTA06LT1GOSCT−ND	ON Semiconductor	MMBTA06LT1G	Yes	No
1	RTV−162	RTV−162	Digikey	473−1203−ND	MG Chemicals	RTV162−300ML	Yes	No
1	R1	320 V	Digikey	F1952−ND	Littelfuse	V320LA10P	Yes	Yes
3	R2,R5,R69	10	Digikey	311−10.0HRCT−ND	Yageo	RC0603FR−0710RL	Yes	No
5	R3,R35, R37,R60, R72	100	Digikey	311−100LRCT−ND	Yaego	RC0402FR−07100RL	Yes	No
1	R4	2.4k	Digikey	311−2.40KHRCT−ND	Yageo	RC0603FR−072K4L	Yes	No
3	R9,R13, R81	4.99k	Digikey	311−4.99KLRCT−ND	Yaego	RC0402FR−074K99L	Yes	No
7	R10,R36, R57,R59, R61,R66, R78	10k	Digikey	311−10.0KLRCT−ND	Yaego	RC0402FR−0710KL	Yes	No
1	R12	50m	Digikey	PRL1632.050FCT−ND	Susumu	PRL1632−R050−F−T1	Yes	No
4	R14,R15, R16,R18	1.5 Meg	Digikey	RHM1.50MAHCT−ND	Rohm	KTR10EZPF1504	Yes	No
1	R17	56k	Digikeu	311−56.0KCRCT−ND	Yaego	RC0805FR−0756KL	Yes	No
2	R19,R21	20k	Digikey	311−20.0KLRCT−ND	Yaego	RC0402FR−0720KL	Yes	No
1	R22	150	Digikey	311−150LRCT−ND	Yaego	RC0402FR−07150RL	Yes	No
2	R23,R24	0.27	Digikey	PT.27YCT−ND	Panasonic	RCWE0612R909FKEA	Yes	No
5	R25,R46, R47,R48, R74	56k	Digikey	311−56.0KLRCT−ND	Yaego	RC0402FR−0756KL	Yes	No
1	R26	15k	Digikey	311−15.0KLRCT−ND	Yageo	RC0402FR−0715KL	Yes	No
1	R27	56k	Digikey	311−56.0KCRCT−ND	Yaego	RC0805FR−0756KL	Yes	No
2	R28,R29	1	Digikey	311−1.00HRCT−ND	Yageo	RC0603FR−071RL	DNI	No
2	R30,R55	11k	Digikey	311−11.0KLRCT−ND	Yaego	RC0402FR−0711KL	Yes	No
1	R31	0.4	Digikey	311−0.4ARCT−ND	Yageo	PT2512FK−070R4L	Yes	No
1	R41	158k	Digikey	YAG2990CT−ND	Yageo	RC0402FR−07158KL	Yes	No
1	R42	4.7Meg	Digikey	RMCF0402FT4M70CT−ND	Stackpole	RMCF0402FT4M70	Yes	No
1	R54	100k	Digikey	311−100KLRCT−ND	Yaego	RC0402FR−07100KL	Yes	No
1	R56	430k	Digikey	311−430KLRCT−ND	Yaego	RC0402FR−07430KL	Yes	No
2	R58,R75	7.15k	Digikey	YAG3235CT−ND	Yaego	RC0402FR−077K15L	Yes	No
1	R62	1k	Digikey	311−1.00KLRCT−ND	Yaego	RC0402FR−071KL	Yes	No
2	R63,R64	205k	Digikey	YAG3050CT−ND	Yaego	RC0402FR−07205KL	Yes	No
1	R65	1.2M	Digikey	YAG5649CT−ND	Yaego	AC0402FR−071M2L	Yes	No
1	R67	8.45k	Digikey	YAG3254CT−ND	Yaego	RC0402FR−078K45L	Yes	No
1	R68	332k	Digikey	311−332KLRCT−ND	Yageo	RC0402FR−07332KL	Yes	No
2	R70,R71	2.7k	Digikey	A129937CT−ND	TE	CRGCQ2010F2K7	Yes	No
1	R73	1k	Digikey	311−1.00KHRCT−ND	Yaego	RC0603FR−071KL	Yes	No
1	R77	10Meg	Digikey	311−10.0MLRCT−ND	Yageo	RC0402FR−0710ML	DNI	No
1	R79	24k	Digikey	311−24KLRCT−ND	Yaego	RC0402FR−0724KL	Yes	No
1	R80	160k	Digikey	311−160KCRCT−ND	Yageo	RC0805FR−07160KL	Yes	No
1	R82	1k	Digikey	311−1.00KLRCT−ND	Yageo	RC0402FR−071KL	Yes	No
1	TX1	180uH	Wurth	750317956	Wurth	750317956	Yes	No
0.001	Thermal Grease	Aavid 249G	Digikey	249G−ND	Aavid	249G	Yes	No
1	T1	750318211	Digikey	750318211	Wurth	750318211	Yes	No

BILL OF MATERIAL (continued)

Quantity	Reference	Part	Distributor	Dist. P/N	Manufacturer	Mfr_PN	Insert	Safety Controlled
1	U1	NCP13992	Digikey	NCP13992AADR2GOSCT −ND	ON Semiconductor	NCP13992AADR2G	Yes	No
1	U2	FODM1007R2	Digikey	FODM1007R2CT−ND	ON Semiconductor	FODM1007R2	Yes	No
1	U4	NCL2801CDA	ON Semiconductor	NCL2801CDA	ON Semiconductor	NCL2801CDA	Yes	No
1	U5	S−1212BA0−M 5T1U	Digikey	1662−2789−1−ND	ABLIC	S−1212BA0−M5T1U	Yes	No
1	U6	TLV1805−Q1	TI	TLV1805−Q1	TI	TLV1805−Q1	Yes	No
3	U9,U10, U12	TLV271SN2T1 G	Digikey	TLV271SN2T1GOSCT−N D	ON Semiconductor	TLV271SN2T1G	Yes	No
1	U11	SI8735BC−ISR	Digikey	336−5079−1−ND	Silicon Labs	SI8735BC−ISR	Yes	No
1	U14	MP4569GN−Z	Digikey	1589−1680−1−ND	MPS	MP4569GN−Z	Yes	No
1	U15	NCP715SQ50 T2G	Digikey	NCP715SQ50T2GOSCT− ND	ON Semiconductor	NCP715SQ50T2G	Yes	No
0.01	Z3	Screw_6−32 X 5/16”	McMaster Carr		*****	*****	Yes	No
0.03	Z4,Z5,Z6	Screw_M3X 8	McMaster Carr		*****	*****	Yes	No

TEST DATA

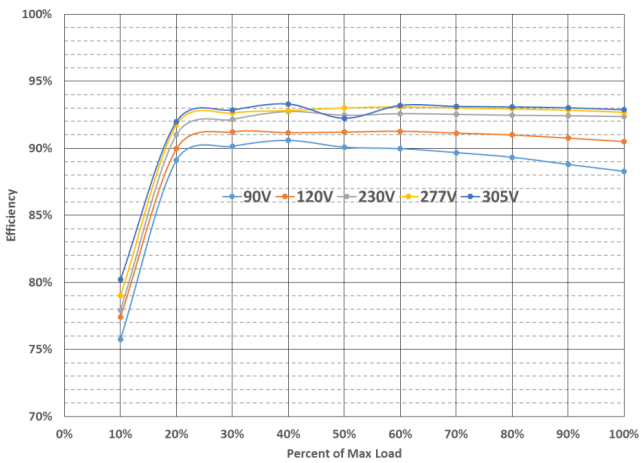

Figure 9. Efficiency

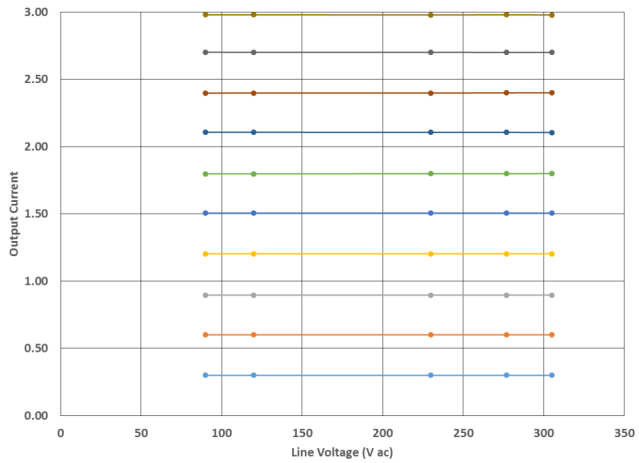

Figure 10. Regulation

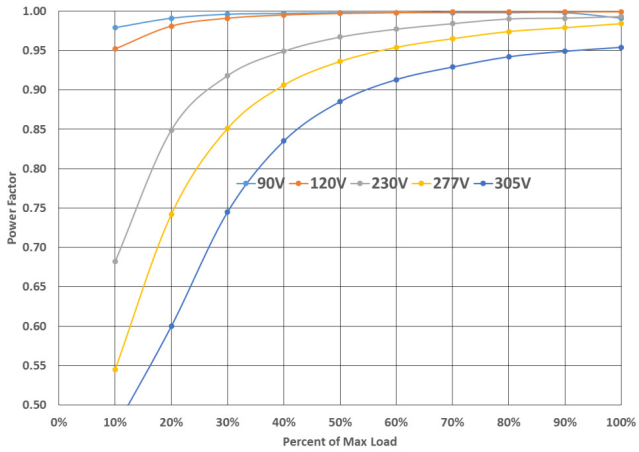

Figure 11. Power Factor

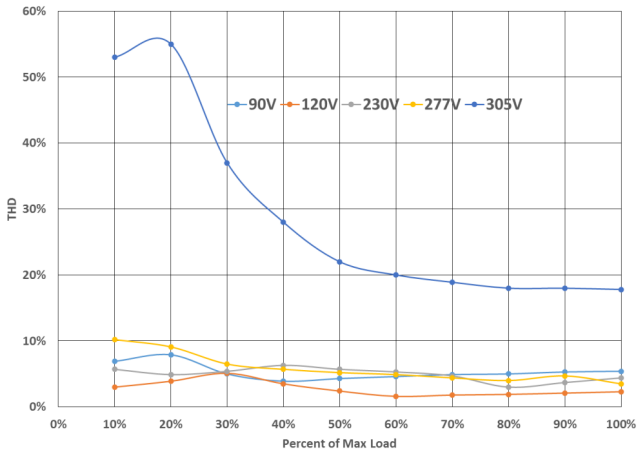

Figure 12. THDi

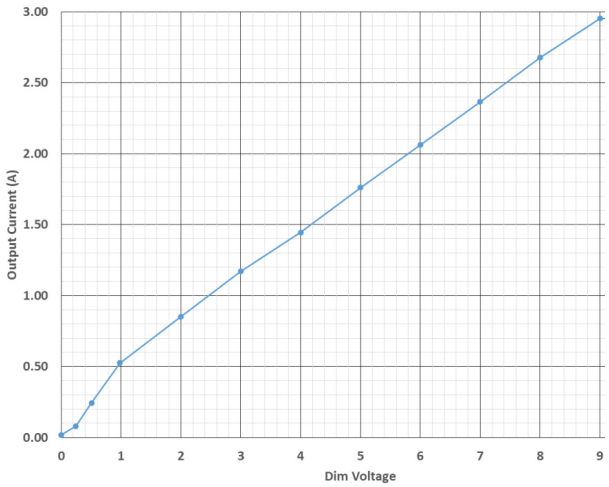

Figure 13. Dim Curve

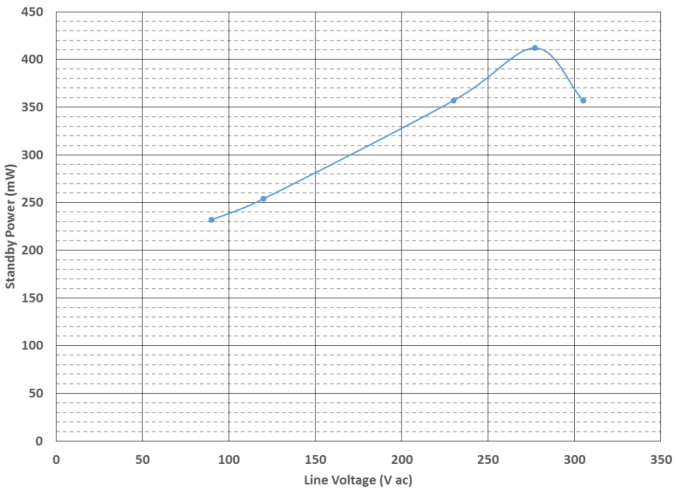

Figure 14. Standby Power

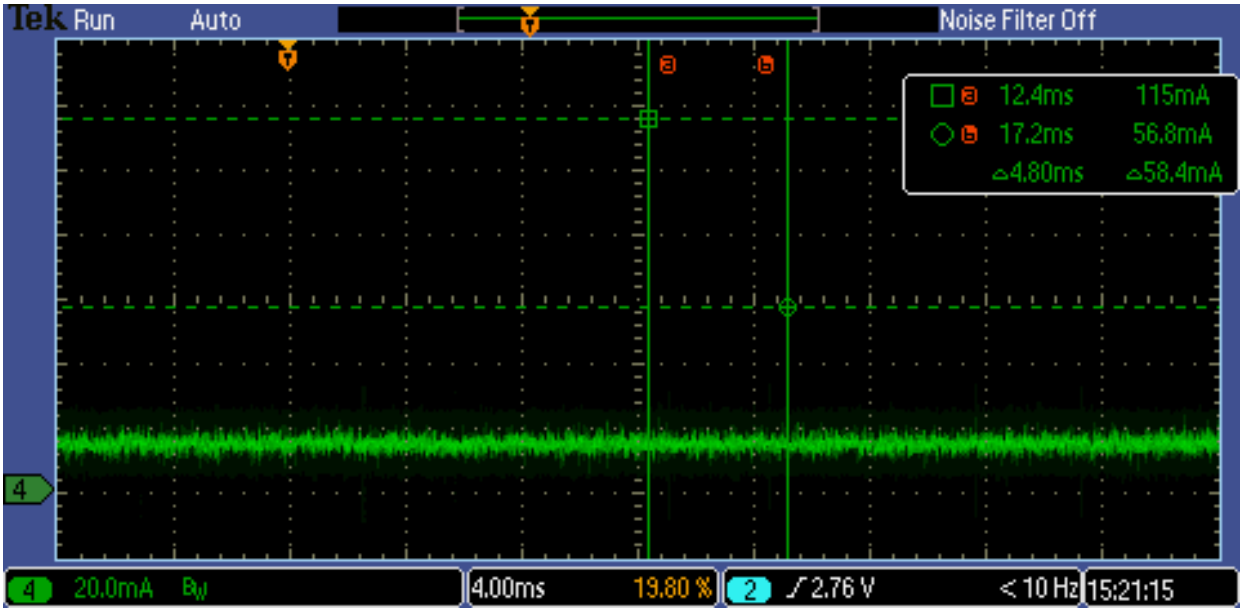

Figure 15. Output @ Min Load

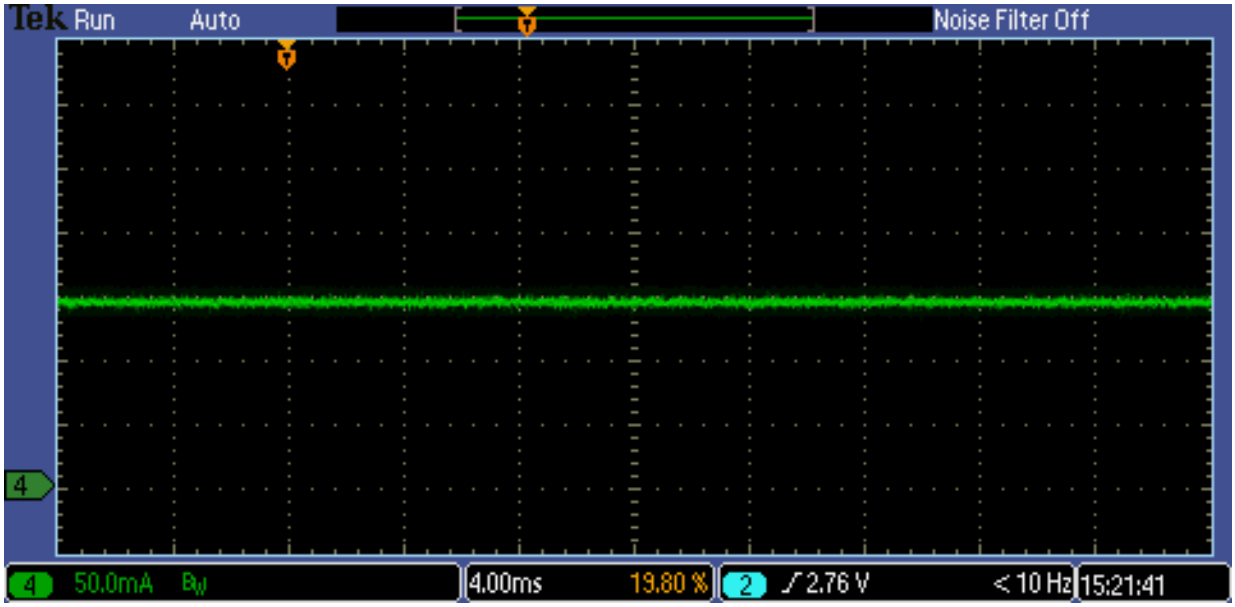

Figure 16. Output @ 150 mA

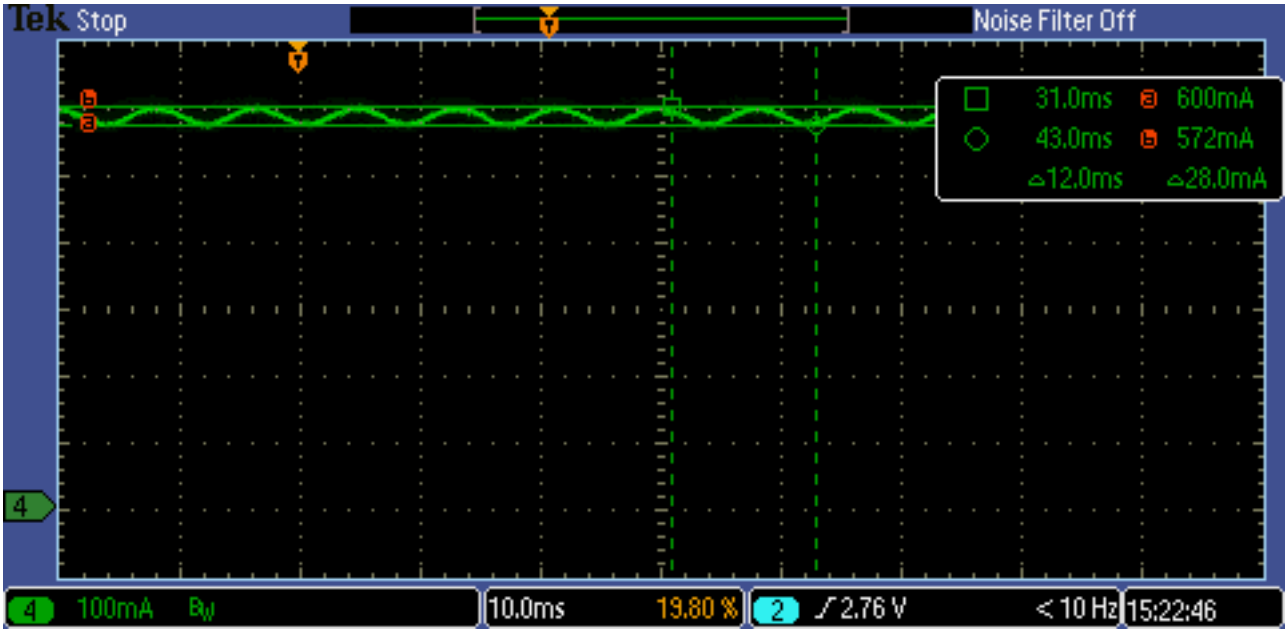

Figure 17. Output @ 600 mA

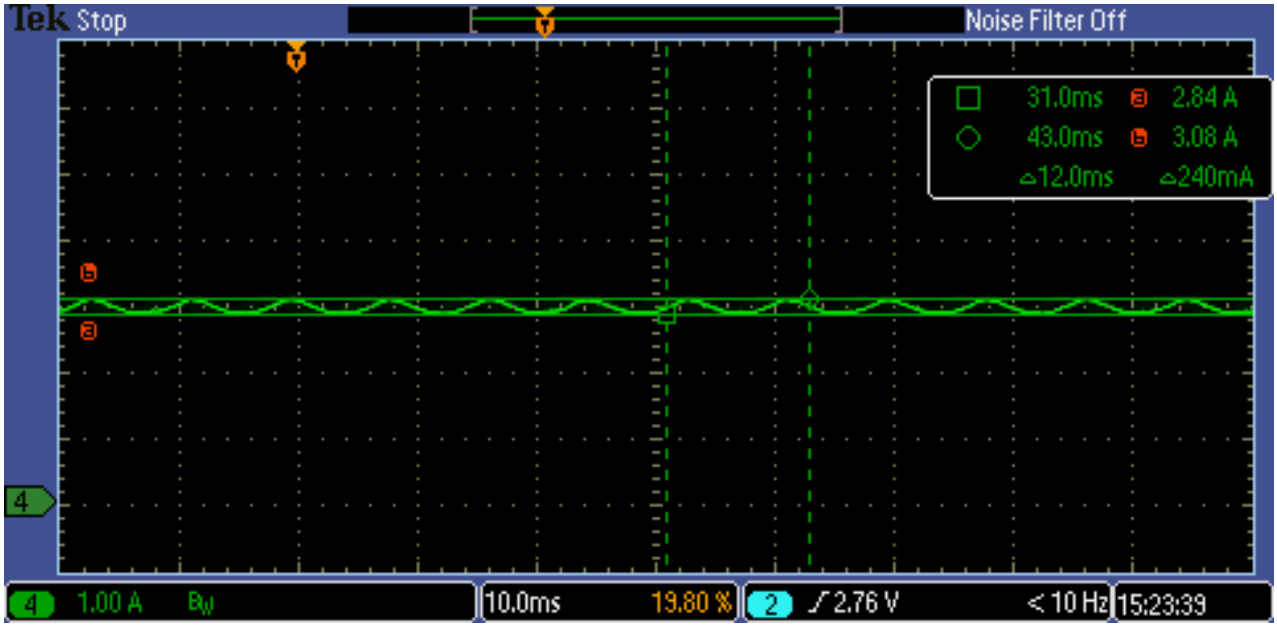

Figure 18. Output @ Max Load

onsemi, onsemi, and other names, marks, and brands are registered and/or common law trademarks of Semiconductor Components Industries, LLC dba "**onsemi**" or its affiliates and/or subsidiaries in the United States and/or other countries. **onsemi** owns the rights to a number of patents, trademarks, copyrights, trade secrets, and other intellectual property. A listing of **onsemi**'s product/patent coverage may be accessed at www.onsemi.com/site/pdf/Patent−Marking.pdf. **onsemi** is an Equal Opportunity/Affirmative Action Employer. This literature is subject to all applicable copyright laws and is not for resale in any manner.

The evaluation board/kit (research and development board/kit) (hereinafter the "board") is not a finished product and is not available for sale to consumers. The board is only intended for research, development, demonstration and evaluation purposes and will only be used in laboratory/development areas by persons with an engineering/technical training and familiar with the risks associated with handling electrical/mechanical components, systems and subsystems. This person assumes full responsibility/liability for proper and safe handling. Any other use, resale or redistribution for any other purpose is strictly prohibited.

THE BOARD IS PROVIDED BY ONSEMI TO YOU "AS IS" AND WITHOUT ANY REPRESENTATIONS OR WARRANTIES WHATSOEVER. WITHOUT LIMITING THE FOREGOING, ONSEMI (AND ITS LICENSORS/SUPPLIERS) HEREBY DISCLAIMS ANY AND ALL REPRESENTATIONS AND WARRANTIES IN RELATION TO THE BOARD, ANY MODIFICATIONS, OR THIS AGREEMENT, WHETHER EXPRESS, IMPLIED, STATUTORY OR OTHERWISE, INCLUDING WITHOUT LIMITATION ANY AND ALL REPRESENTATIONS AND WARRANTIES OF MERCHANTABILITY, FITNESS FOR A PARTICULAR PURPOSE, TITLE, NON−INFRINGEMENT, AND THOSE ARISING FROM A COURSE OF DEALING, TRADE USAGE, TRADE CUSTOM OR TRADE PRACTICE.

onsemi reserves the right to make changes without further notice to any board.

You are responsible for determining whether the board will be suitable for your intended use or application or will achieve your intended results. Prior to using or distributing any systems that have been evaluated, designed or tested using the board, you agree to test and validate your design to confirm the functionality for your application. Any technical, applications or design information or advice, quality characterization, reliability data or other services provided by **onsemi** shall not constitute any representation or warranty by **onsemi**, and no additional obligations or liabilities shall arise from **onsemi** having provided such information or services.

onsemi products including the boards are not designed, intended, or authorized for use in life support systems, or any FDA Class 3 medical devices or medical devices with a similar or equivalent classification in a foreign jurisdiction, or any devices intended for implantation in the human body. You agree to indemnify, defend and hold harmless **onsemi**, its directors, officers, employees, representatives, agents, subsidiaries, affiliates, distributors, and assigns, against any and all liabilities, losses, costs, damages, judgments, and expenses, arising out of any claim, demand, investigation, lawsuit, regulatory action or cause of action arising out of or associated with any unauthorized use, even if such claim alleges that **onsemi** was negligent regarding the design or manufacture of any products and/or the board.

This evaluation board/kit does not fall within the scope of the European Union directives regarding electromagnetic compatibility, restricted substances (RoHS), recycling (WEEE), FCC, CE or UL, and may not meet the technical requirements of these or other related directives.

FCC WARNING − This evaluation board/kit is intended for use for engineering development, demonstration, or evaluation purposes only and is not considered by **onsemi** to be a finished end product fit for general consumer use. It may generate, use, or radiate radio frequency energy and has not been tested for compliance with the limits of computing devices pursuant to part 15 of FCC rules, which are designed to provide reasonable protection against radio frequency interference. Operation of this equipment may cause interference with radio communications, in which case the user shall be responsible, at its expense, to take whatever measures may be required to correct this interference.

onsemi does not convey any license under its patent rights nor the rights of others.

LIMITATIONS OF LIABILITY: **onsemi** shall not be liable for any special, consequential, incidental, indirect or punitive damages, including, but not limited to the costs of requalification, delay, loss of profits or goodwill, arising out of or in connection with the board, even if **onsemi** is advised of the possibility of such damages. In no event shall **onsemi**'s aggregate liability from any obligation arising out of or in connection with the board, under any theory of liability, exceed the purchase price paid for the board, if any.

The board is provided to you subject to the license and other terms per **onsemi**'s standard terms and conditions of sale. For more information and documentation, please visit www.onsemi.com.

ADDITIONAL INFORMATION

TECHNICAL PUBLICATIONS:
Technical Library: www.onsemi.com/design/resources/technical−documentation
onsemi Website: www.onsemi.com

ONLINE SUPPORT: www.onsemi.com/support
For additional information, please contact your local Sales Representative at www.onsemi.com/support/sales