EVBUM2631

Automotive Multi-Output Power Management IC (PMIC) for Safety Applications Evaluation Board User's Manual

ON Semiconductor®

www.onsemi.com

EVAL BOARD USER'S MANUAL

Description

The NCV97400 is a power management unit (PMU) with 4 switching regulators developed to support ISO 26262 for ADAS (Advanced Driver Assistance Systems) applications. The primary regulator converts battery to 3.3 V for direct loads as well as for powering the two adjustable output voltage secondary buck regulators and the 5 V low−current boost regulator.

Figure 1. NCV97400 Evaluation Board – TOP

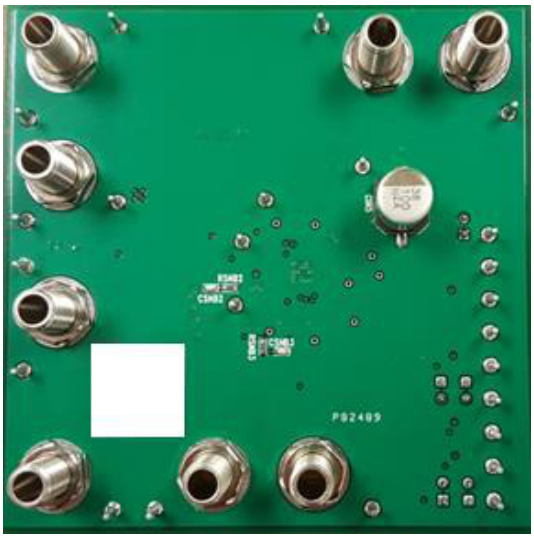

Figure 2. NCV97400 Evaluation Board – BOTTOM

Key Features and Benefits

- 3 Enabled Buck Converters
- 1 Boost Converter for an In−Vehicle Network (IVN) Supply
- Fixed Frequency Operation at 2 MHz
- Automatic Pseudo−Random Spread Spectrum for improved EMI
- Window Output Voltage Monitor for each output with independent voltage reference
- Window Watchdog Timer with independent oscillator
- Developed According to ISO−26262 for Safety Applications

Applications

- Safety Applications
- ADAS (Advanced Driver Assistance Systems)
- Body Electronics
- Telematics

© Semiconductor Components Industries, LLC, 2019

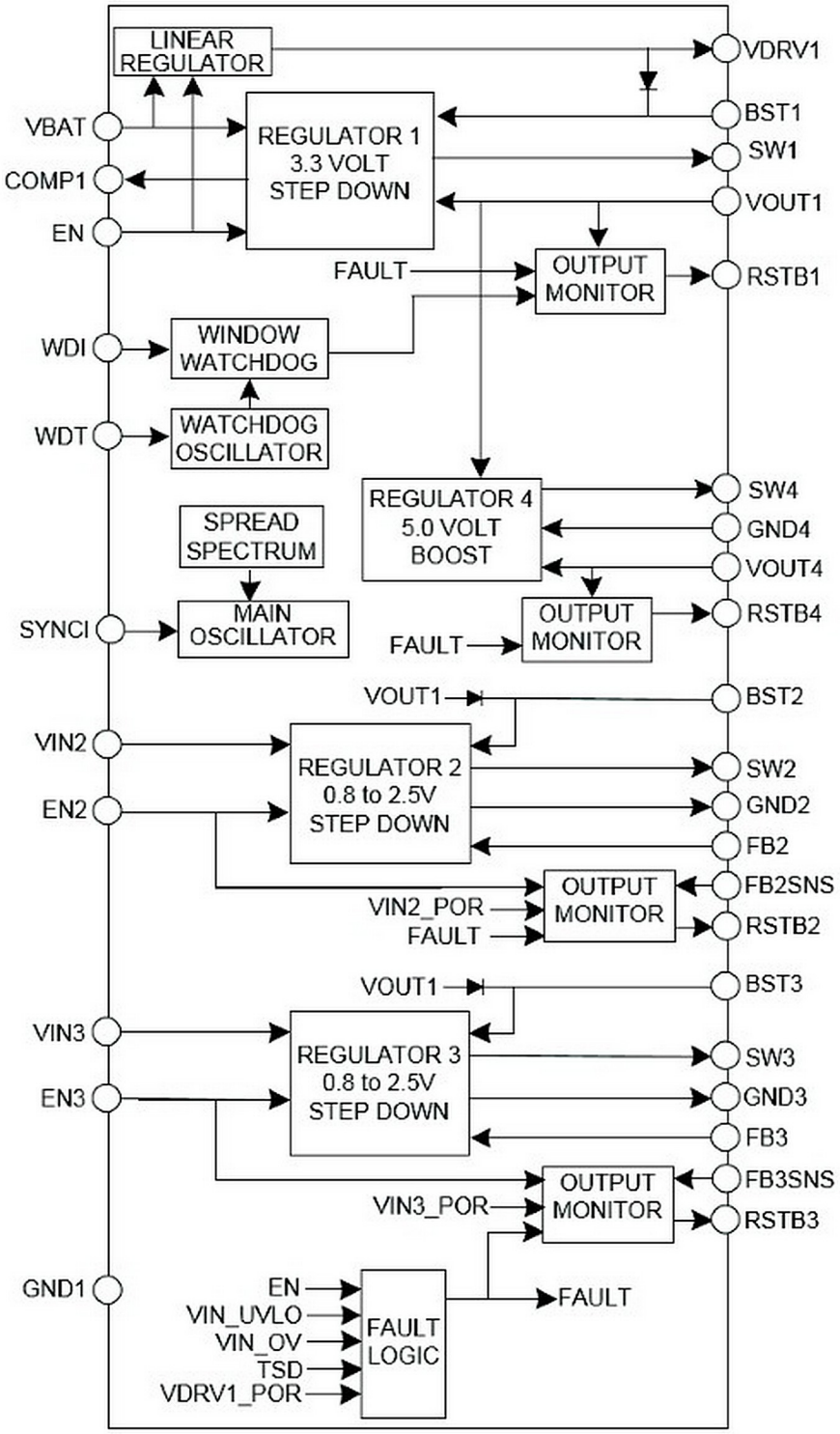

Figure 3. NCV97400 Simplified Block Diagram

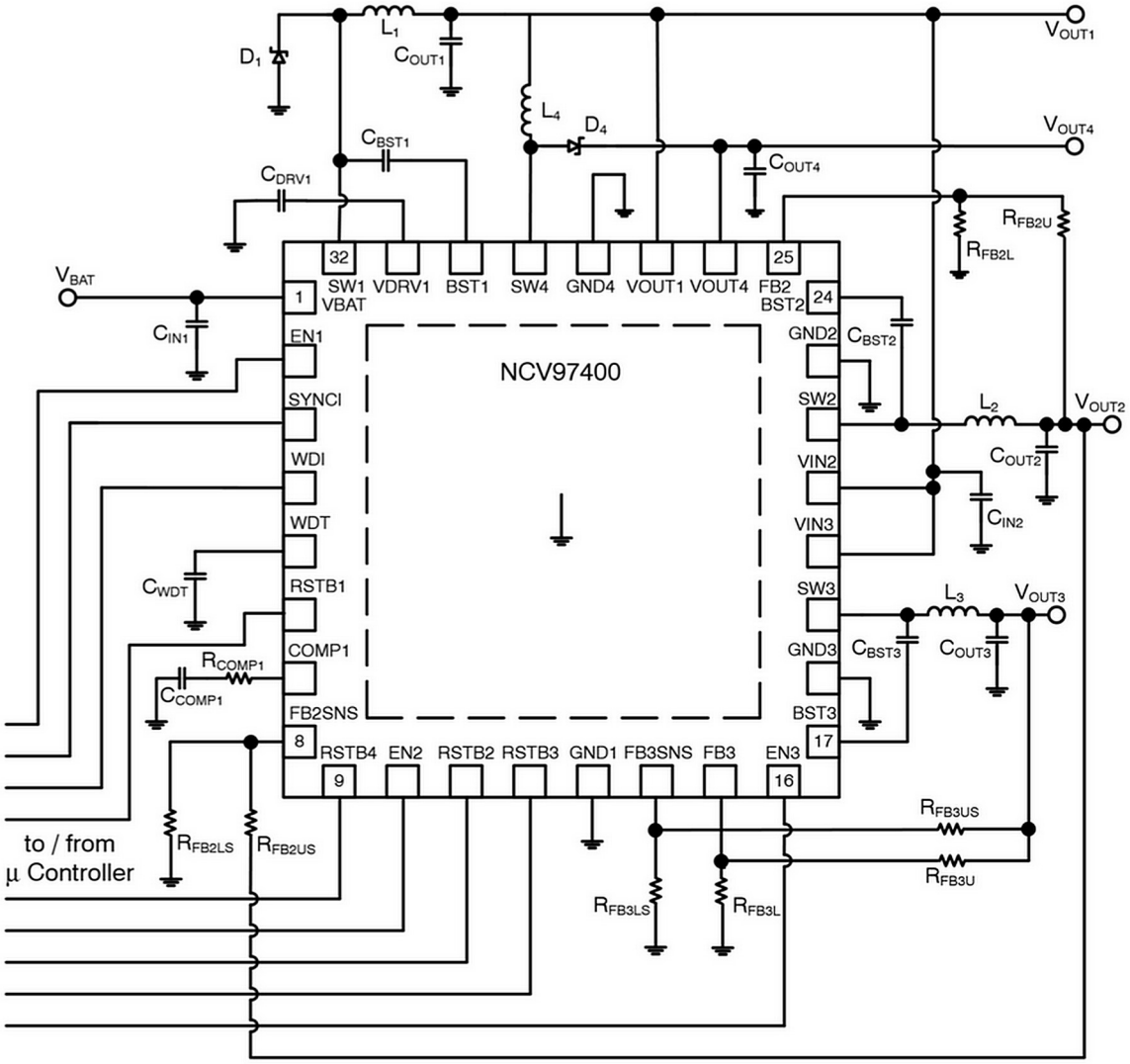

Figure 4. NCV97400 Typical Application Diagram

EVALUATION BOARD TERMINALS

Terminal	Function
VBAT	Positive DC input voltage
GND	Common DC return (multiple)
VOUT1	Positive 3.3 V DC output voltage (Switcher 1)
VOUT2	Positive DC output voltage (Switcher 2)
VOUT3	Positive DC output voltage (Switcher 3)
VOUT4	Positive 5.0 V DC output voltage (Switcher 4)
EN1	Master enable input. Includes jumper to connect to VBAT
EN2	Switcher 2 enable input. Includes jumper to connect to VOUT1 or to RSTB1
EN3	Switcher 3 enable input. Includes jumper to connect to VOUT1 or to RSTB2
RST1B	Reset with adjustable delay. Goes low when VOUT1 is out of regulation and when the Watchdog detects a fault
RST2B	Reset with adjustable delay. Goes low when the VOUT2 is out of regulation
RST3B	Reset with adjustable delay. Goes low when the VOUT3 is out of regulation
RST4B	Reset with adjustable delay. Goes low when the VOUT4 is out of regulation
WDI	Window watchdog input. Monitors status of a microcontroller
SYNCI	External oscillator synchronization input

ABSOLUTE MAXIMUM RATINGS (Voltages are with respect to GND)

Rating	Value	Unit
DC Supply Voltage (VBAT)	−0.3 to 45	V
DC Supply Voltage (EN1)	−0.3 to 40	V
DC Supply Voltage (EN2, EN3, WDI, SYNCI)	−0.3 to 6	V
DC Supply Voltage (VIN2, VIN3)	−0.3 to 3.6	V
Storage Temperature Range	−55 to 150	°C

Stresses exceeding those listed in the Maximum Ratings table may damage the device. If any of these limits are exceeded, device functionality should not be assumed, damage may occur and reliability may be affected.

ELECTRICAL CHARACTERISTICS (T_J = 25°C Unless Otherwise Noted)

Characteristic	Conditions	Typical Value	Unit
SWITCHING			
Switching Frequency	–	2	MHz
Soft−start Delay	–	1.4	ms
Spread Spectrum Frequency Range		2.0 to 2.6	MHz
CURRENT LIMIT			
Peak Current Limit (VOUT1)		4.4	A
Peak Current Limit (VOUT2)		2.9	A
Peak Current Limit (VOUT3)		2.9	A
Peak Current Limit (VOUT4)		0.9	A
PROTECTIONS			
Input Under−voltage Lockout (UVLO)	V_{BAT} decreasing	3.9	V
Input Over−voltage Protection	V_{BAT} increasing	38.5	V
Thermal Shutdown	T_J rising	170	°C
OUTPUT REGULATION			
Output Voltage (VOUT1)		3.3	V
Output Voltage (VOUT2)		1.8	V
Output Voltage (VOUT3)		1.2	V
Output Voltage (VOUT4)		5.0	V

Product parametric performance is indicated in the Electrical Characteristics for the listed test conditions, unless otherwise noted. Product performance may not be indicated by the Electrical Characteristics if operated under different conditions.

Quick−Start Guidelines

The following steps will get you familiar with the setup of inputs and outputs of the NCV97400:

1. Disconnect all jumpers connected to the board
2. Connect a 12 V DC power supply between the VBAT and GND terminals in the upper left of the evaluation board
3. Connect a multi−meter or oscilloscope probe between the VOUT1 and GND terminals located in the upper right of the evaluation board
4. Connect a multi−meter or oscilloscope probe between the VOUT2 and GND terminals located in the lower right of the evaluation board
5. Connect a multi−meter or oscilloscope probe between the VOUT3 and GND terminals located in the center of the bottom of the evaluation board
6. Connect a multi−meter or oscilloscope probe between the VOUT4 and GND terminals located in the center of the right edge of the evaluation board
7. Connect the EN1 jumper to VIN0:
   a. Verify that VOUT1 is 3.3 V, VOUT4 is 5.0 V
8. Connect the EN2 jumper to VOUT1:
   a. Verify that VOUT2 is 1.8 V
9. Connect the EN3 jumper to VOUT1:
   a. Verify that VOUT3 is 1.2 V

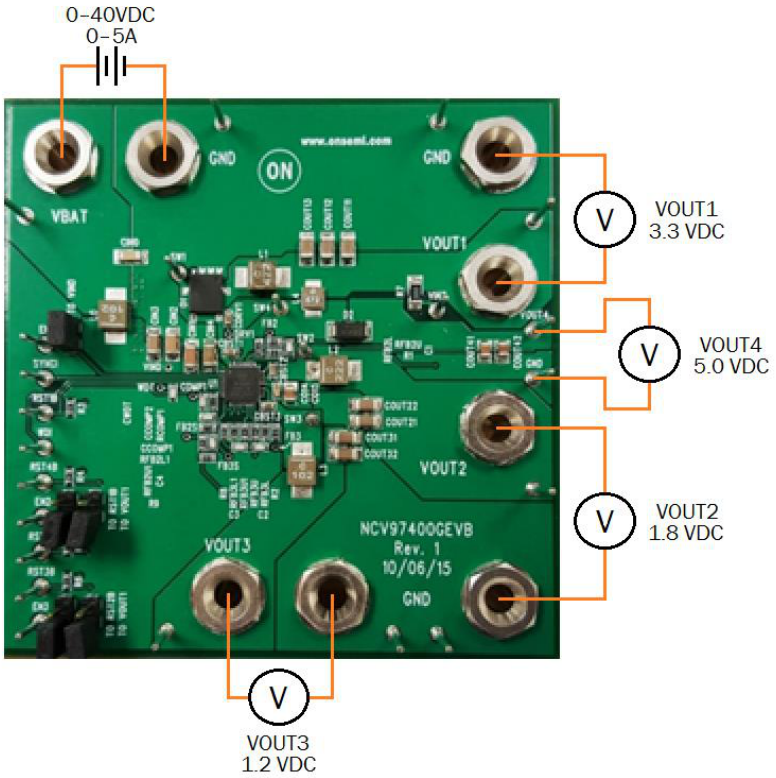

Figure 5. NCV97400GEVB PCB Connections

Output Voltage Selection

The voltage outputs for switcher 2 and 3 are adjustable and can be set with a resistor divider. The FB reference for both switchers is 0.8 V.

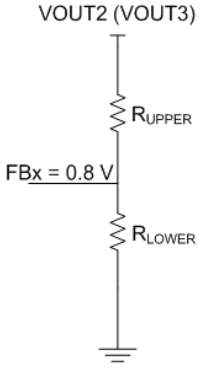

Figure 6. Output Voltage Selection with Feedback Divider

The upper resistor is set to 10 KΩ and is part of the feedback loop. To maintain stability over all conditions, it is recommended to change the only the lower feedback resistor to set the output voltage. It is important the output monitor sense pins for those switchers (FB2SNS and FB3SNS) have the same voltage dividers that the FB2 and FB3 pins have from their outputs. Use the following equation:

$$R_{LOWER} = R_{UPPER} \times \frac{V_{FB}}{V_{OUT} - V_{FB}}$$

Some common setups are listed below:

SW2 AND SW3 COMMON FEEDBACK DIVIDERS

Desired Output (V)	VREF (V)	R_{UPPER} (kΩ, 1%)	R_{LOWER} (kΩ, 1%)
0.8	0.8	10.0	Not used
0.9	0.8	10.0	80.6
1.2	0.8	10.0	20.0
1.8	0.8	10.0	8.06
2.5	0.8	10.0	4.75

Soft Start

The NCV97400 contains a battery−connectable Enable pin EN1 for the primary buck regulator. EN2 and EN3 must not be connected to the battery. A common setup includes the following connections:

EN1 → VIN
EN2 → VOUT1
EN3 → VOUT1

When the EN connections on the board are as shown above, the following startup profile can be seen on an oscilloscope:

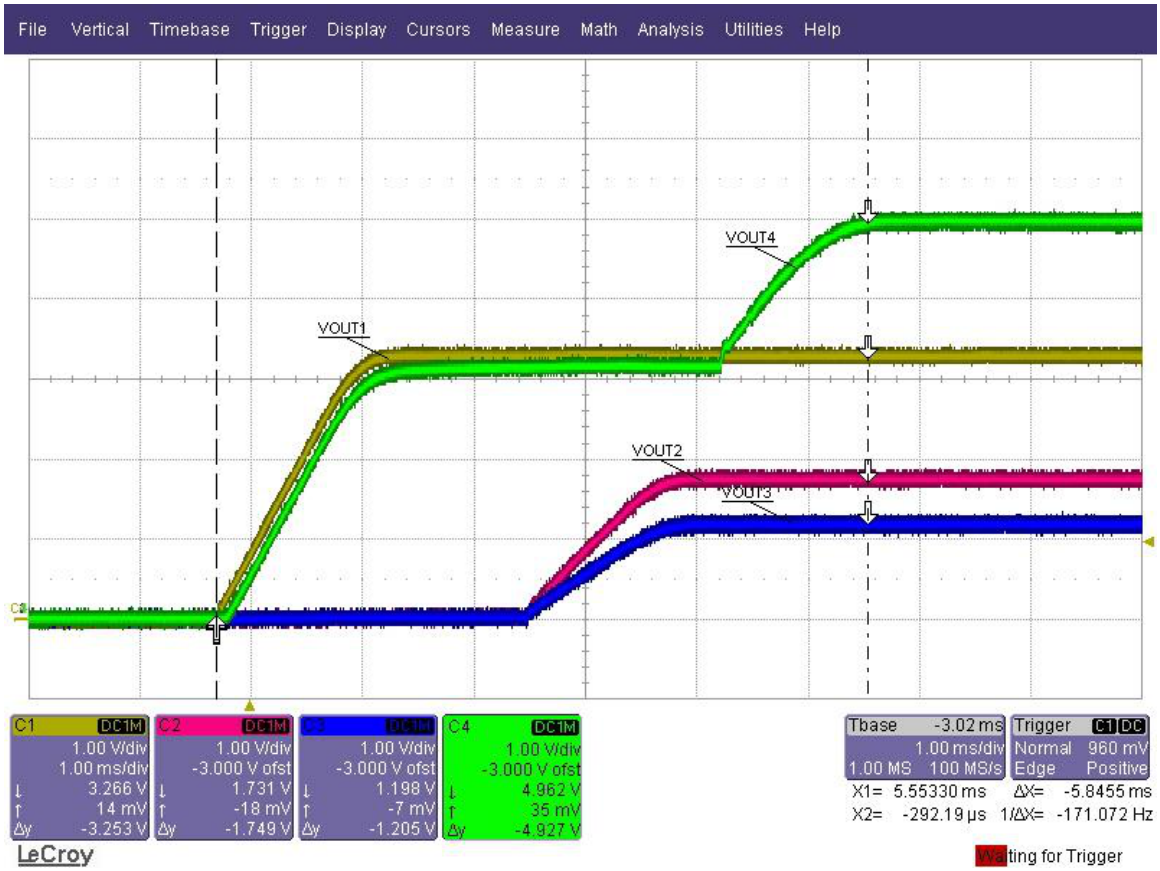

Figure 7. Typical NCV97400 Startup Profile

Notice that the VOUT4 output initially follows VOUT1 due to the inductor and forward−biased rectifier connecting VOUT1 to VOUT4. Once VOUT1 is in regulation, the other 3 switchers are allowed to soft−start, and VOUT4 rises to target voltage.

Typical Start−up Sequence

A common sequenced startup uses the following connections:

EN1 → VIN
EN2 → RSTB1
EN3 → RSTB2

When the EN connections on the board are as shown above, the following startup profile can be seen on an oscilloscope:

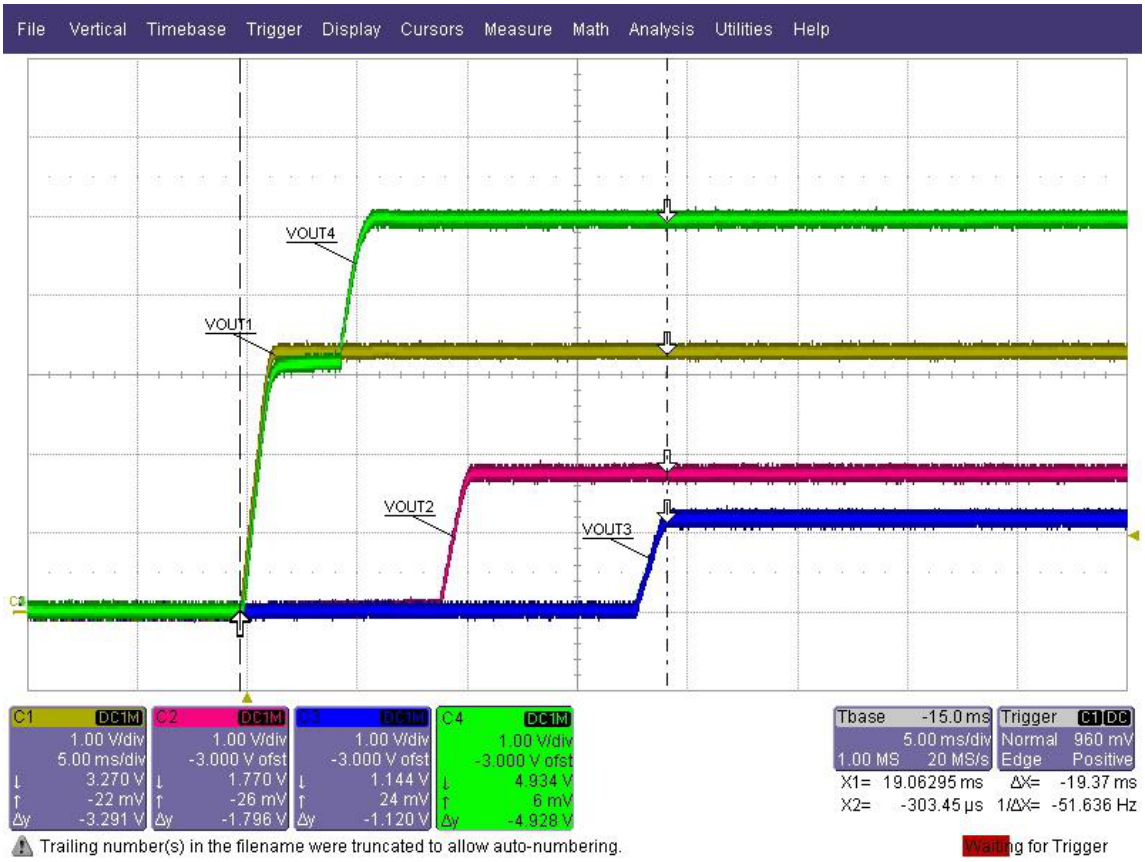

Figure 8. NCV97400 Sequenced Startup Profile

Notice that once VOUT1 is in regulation, VOUT4 is allowed to startup. VOUT4 does not have a dedicated EN pin, and relies on completion of VOUT1 soft−start to begin its startup. Since EN2 is connected to RSTB1, VOUT2 soft−start waits until the RSTB1 signal goes high before beginning soft−start. Likewise with VOUT3, the EN3 pin is connected to RSTB2, so it waits until the RSTB2 signal goes high before beginning soft−start.

EMI Filter

In a typical application, an LC filter is used on the supply input line of a regulator to reduce EMI generated by the device. On this demo board, an LC filter is prepopulated to allow you to perform EMI testing directly with this demo board.

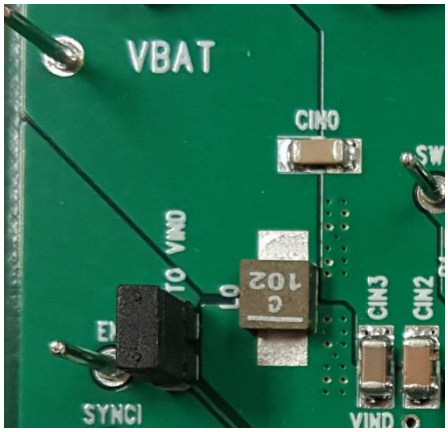

Figure 9. LC Filter on VIN Line

L0: 1.0 μH
CIN0: 0.1 μF

An input filter, in conjunction with spread spectrum, can drastically reduce the emissions from a switching regulator. Results and more detail will be discussed in the next section.

Spread Spectrum

By default, pseudo−random spread spectrum is enabled on the NCV97400. It controls the main oscillator, which is common to all 4 switching regulators. The switching frequency switches to one of 16 frequencies (according to an internal pseudo−random algorithm) between 2.0 MHz and 2.6 MHz.

To disable spread spectrum: simply connect a signal generator with your desired switching frequency to the SYNCI pin. This will override the spread spectrum algorithm and force the oscillator to your desired frequency. You may use any frequency from 1.8 MHz up to 2.6 MHz.

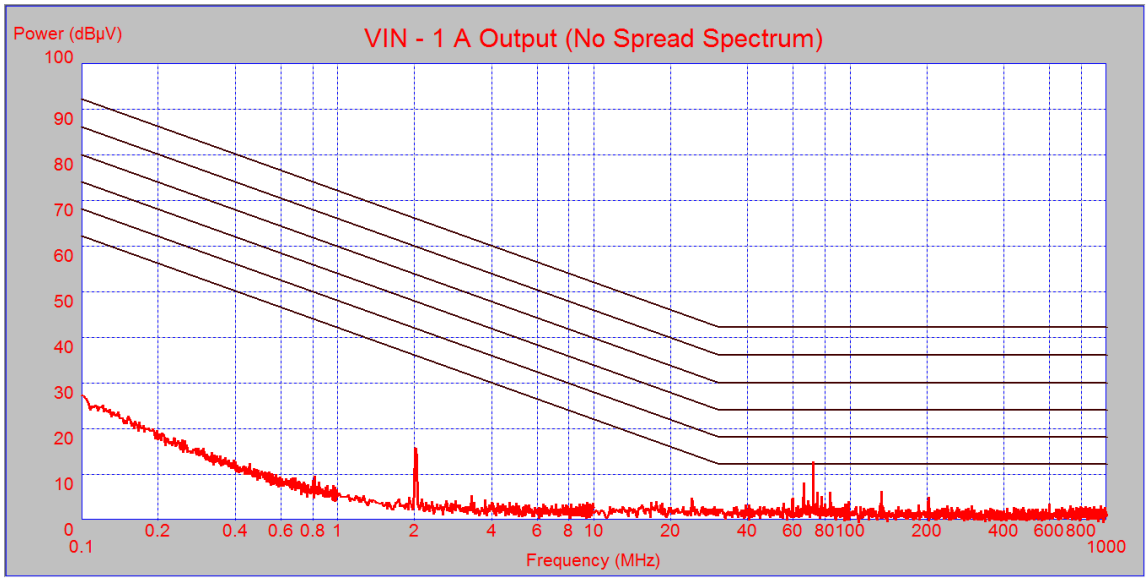

Figure 10. EMI with 1 A Output

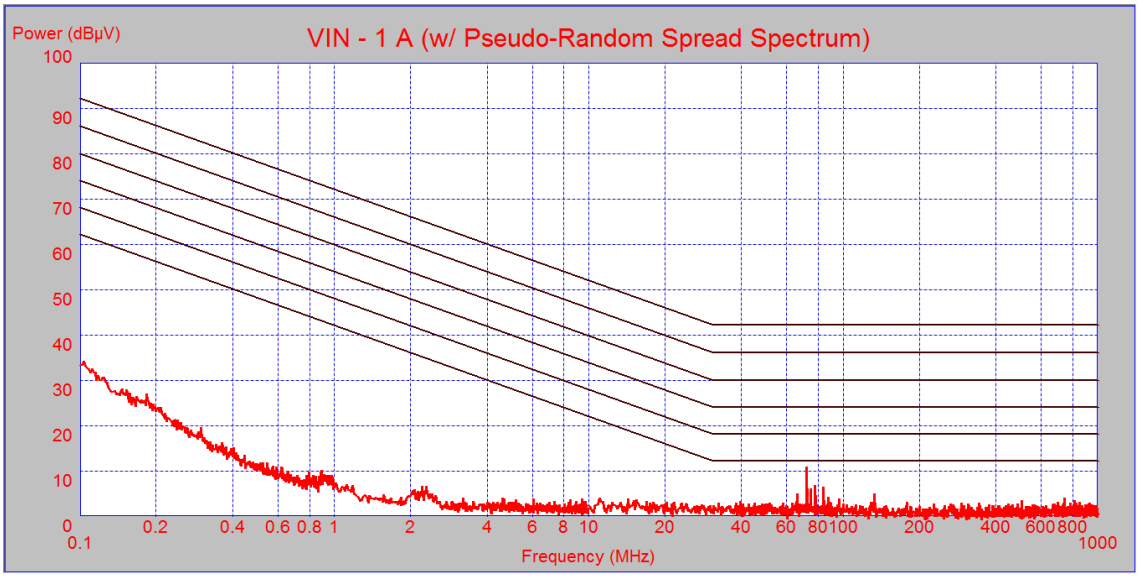

Figure 11. EMI with 1 A Output and Spread Spectrum Enabled

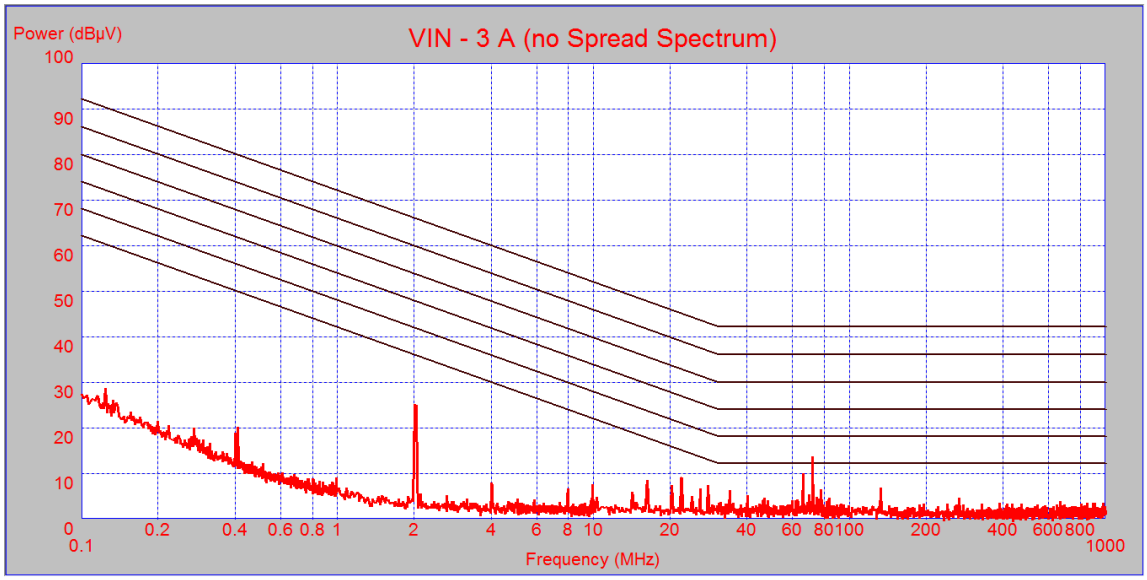

Figure 12. EMI with 3 A Output

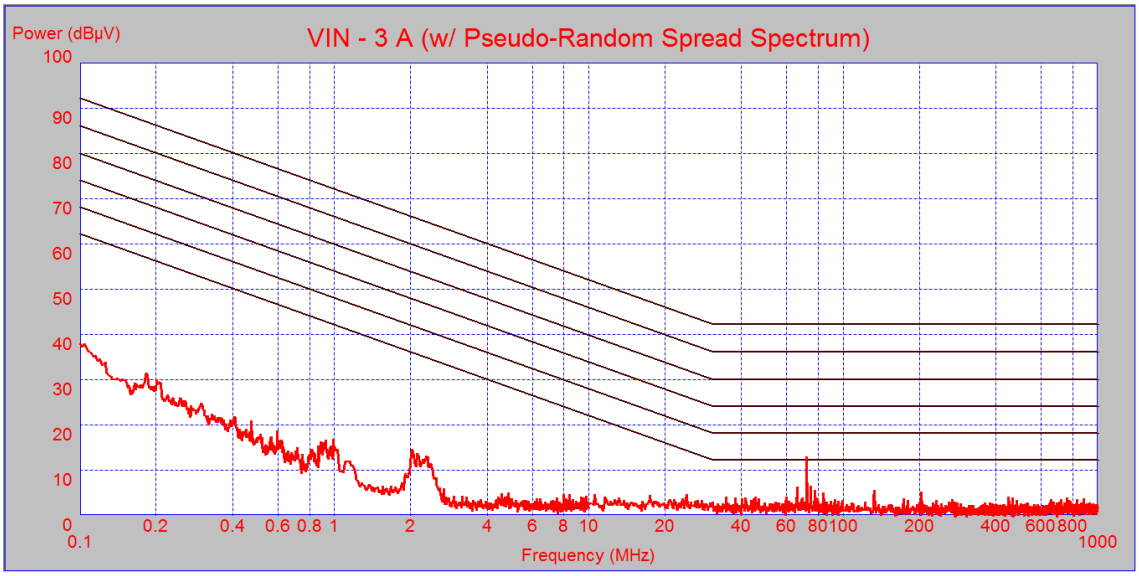

Figure 13. EMI with 3 A Output and Spread Spectrum Enabled

Watchdog

The NCV97400 has a built in window watchdog function. The watchdog timing window is controlled by a capacitor on the WDT pin. The signal being watched is sensed on the WDI pin. If a rising edge is not received at the WDI pin during the timing window, the watchdog will assert RST1B (low) for the duration of the Reset Delay Time.

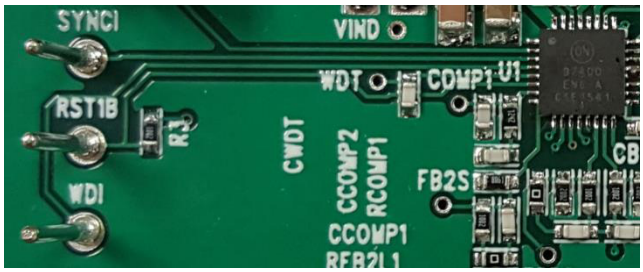

Figure 14. NCV97400 Watchdog Pins

To disable the watchdog function for debug purposes, short the WDT pin to GND and connect SYNCI to VOUT1. This will prevent the watchdog from asserting RSTB1. This also removes Spread Spectrum from the switching frequency.

Efficiency

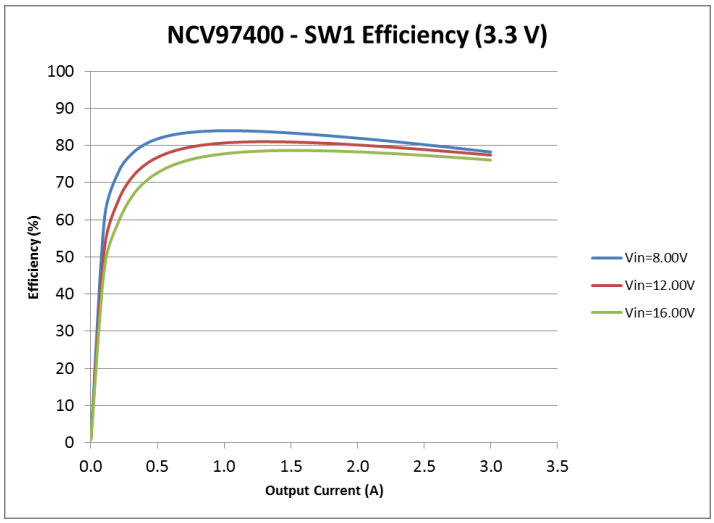
NCV97400 - SW1 Efficiency (3.3 V)
Efficiency (%)
100
90
80
70
60
50
40
30
20
10
0
0.0
0.5
1.0
1.5
2.0
2.5
3.0
3.5
Output Current (A)
Vin=8.00V
Vin=12.00V
Vin=16.00V

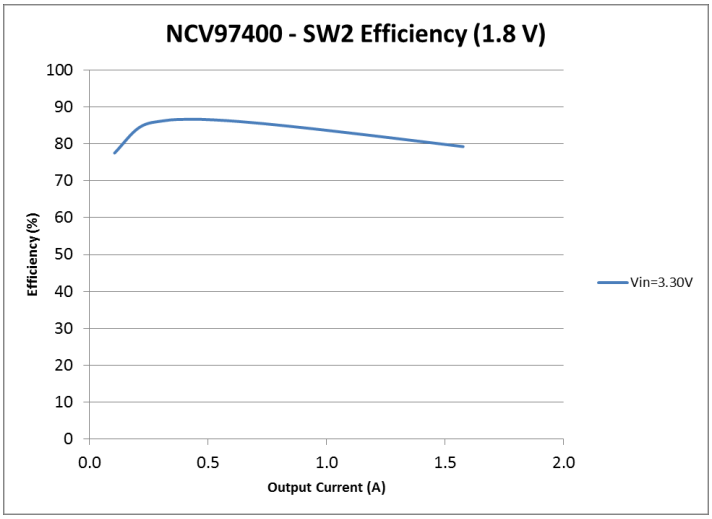
NCV97400 - SW2 Efficiency (1.8 V)
Efficiency (%)
100
90
80
70
60
50
40
30
20
10
0
0.0
0.5
1.0
1.5
2.0
Output Current (A)
Vin=3.30V

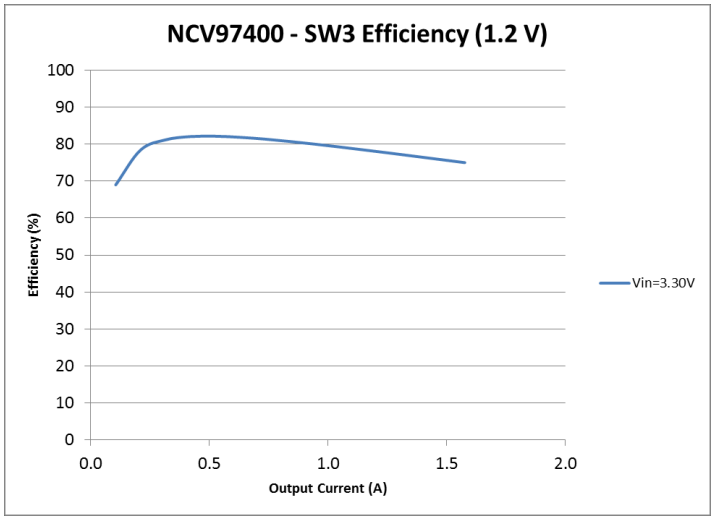
NCV97400 - SW3 Efficiency (1.2 V)
Efficiency (%)
100
90
80
70
60
50
40
30
20
10
0
0.0
0.5
1.0
1.5
2.0
Output Current (A)
Vin=3.30V

Schematic

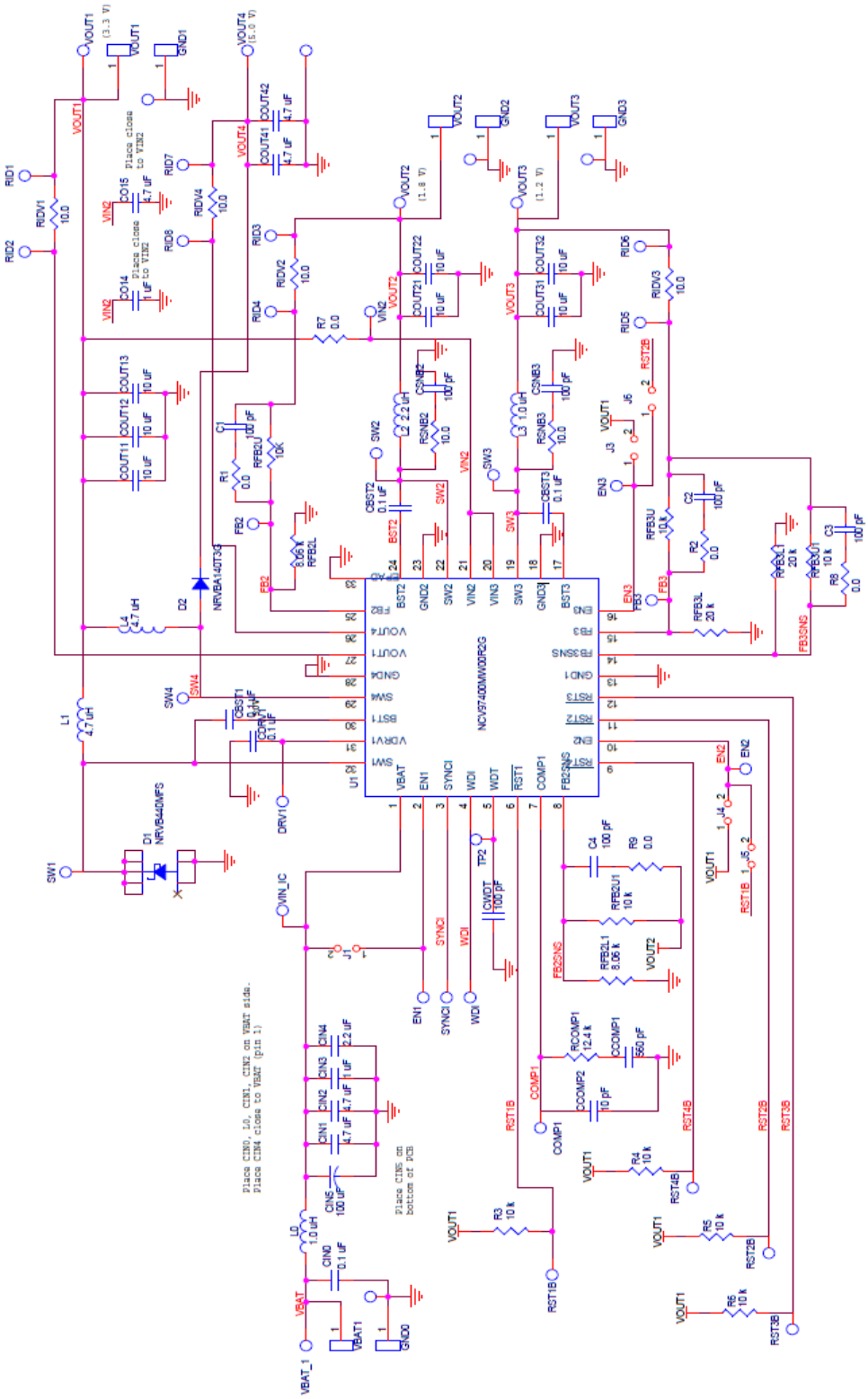

Figure 15.

PCB Layout

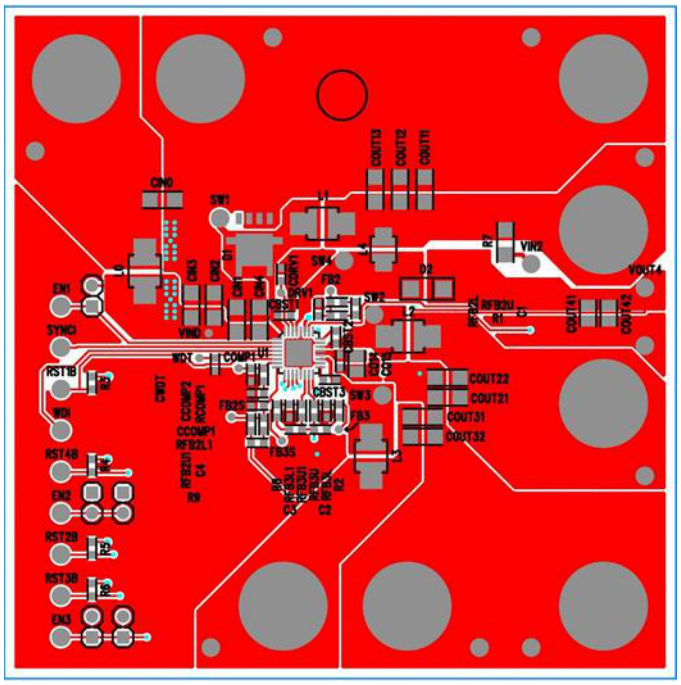

Figure 16. NCV97400GEVB PCB Layout – TOP Layer

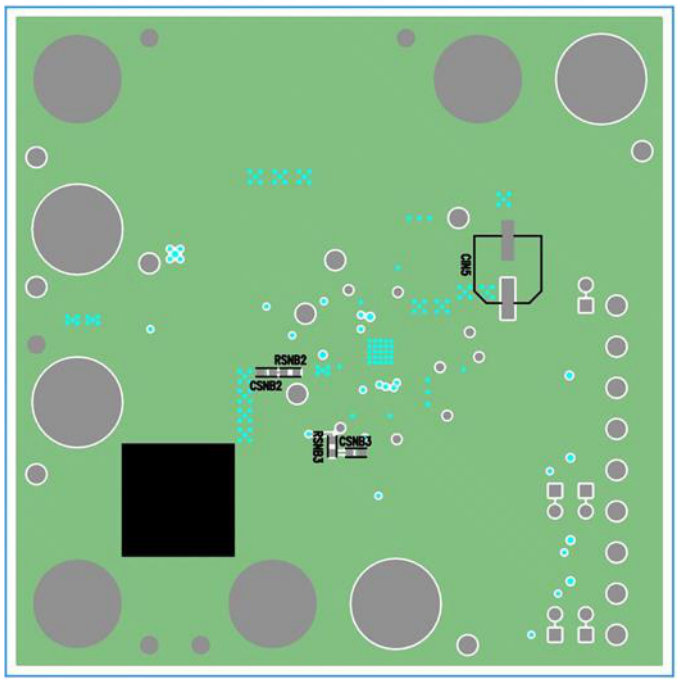

Figure 17. NCV97400GEVB PCB Layout – BOTTOM Layer (Mirrored)

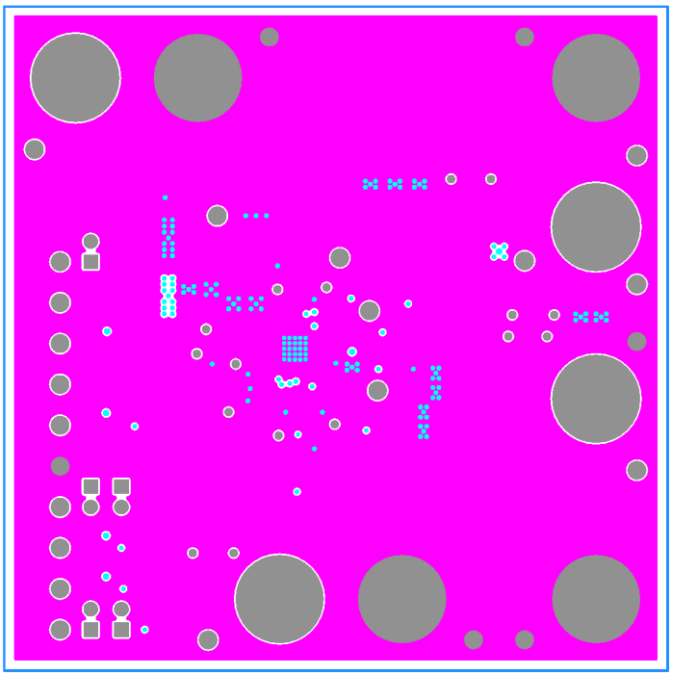

Figure 18. NCV97400GEVB PCB Layout – INNER GND Layer

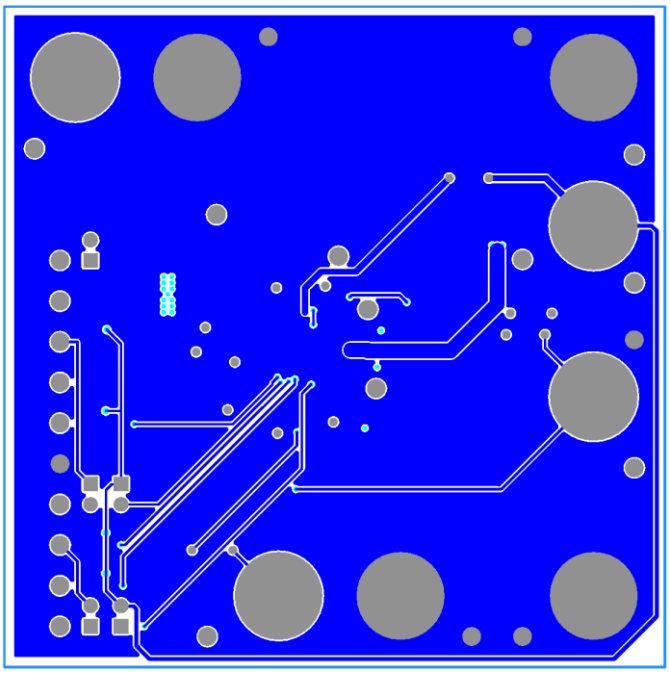

Figure 19. NCV97400GEVB PCB Layout – INNER ROUTING Layer

BILL OF MATERIALS FOR THE NCV97400GEVB

Reference Designator(s)	Qty	Description	Value	Tolerance	Footprint	Manufacturer	Manufacturer's Part Number	Substitution Allowed
C1, C2, C3, C4, CSNB2, CSNB3, CWDT	7	CAP CER 100PF 50 V 5% NP0 0603	100 pF	5%	603	Murata Electronics North America	GCM1885C1H101JA16D	Yes
CBST1, CBST2, CBST3, CDRV1	4	CAP CER 0.1UF 50 V 10% X7R 0603	0.1 μF	10%	603	Murata Electronics North America	GCM188R71H104KA57D	Yes
CCOMP1	1	CAP CER 560PF 50 V 5% NP0 0603	560 pF	5%	603	Murata Electronics North America	GCM1885C1H561JA16D	Yes
CCOMP2	1	CAP CER 10PF 50 V 5% NP0 0603	10 pF	5%	603	Murata Electronics North America	GCM1885C1H100JA16D	Yes
CIN0	1	CAP CER 0.1UF 50 V X7R 1206	0.1 μF	10%	1206	Murata Electronics North America	GCM319R71H104KA37D	Yes
CIN1, CIN2	2	CAP CER 4.7UF 50 V 10% X7R 1206	4.7 μF	10%	1206	TDK Corporation	C3216X7R1H475-K160AC	Yes
CIN3	1	CAP CER 1.0UF 50 V 10% X7R 1206	1.0 μF	10%	1206	Murata Electronics North America	GCM31MR71H105KA55L	Yes
CIN4	1	CAP CER 2.2UF 50 V 10% X7R 1206	2.2 μF	10%	1206	Murata Electronics North America	GCM31CR71H225KA55L	Yes
CIN5	1	CAP ALUM 100UF 50 V 20% SMD	100 μF	20%	FK_V_E	Chemi−Con	EMZA500ADA101MHA0G	Yes
CO14	1	CAP CER 1UF 16 V 10% X7R 0603	1.0 μF	10%	603	Murata Electronics North America	GCM188R71C105KA64D	Yes
CO15, COUT41, COUT42	3	CAP CER 4.7UF 16 V 10% X7R 0805	4.7 μF	10%	805	TDK Corporation	CGA4J3X7R1C475K125AB	Yes
COUT11, COUT12, COUT13, COUT21, COUT22, COUT31, COUT32	7	CAP CER 10UF 10 V 10% X7R 1206	10 μF	10%	1206	Murata Electronics North America	GCM31CR71A106KA64L	Yes
R1, R2, R8, R9, RIDV1	5	RES 0.0 OHM 1/10W 0603 SMD	0	Jumper	603	Vishay/Dale	CR-CW06030000Z0E-A	Yes
R3, R4, R5, R6, RFB2U, RFB3U, RFB2U1, RFB3U1	8	RES 10.0K OHM 1/10W 1% 0603 SMD	10.0K	1%	603	Vishay/Dale	CR-CW060310K0FK-EA	Yes
R7	1	RES 0.0 OHM 1/4W 1206 SMD	0	Jumper	1206	Vishay/Dale	CR-CW12060000Z0E-A	Yes
RCOMP1	1	RES 12.4K OHM 1/10W 1% 0603 SMD	12.4K	1%	603	Vishay/Dale	CR-CW060312K4FK-EA	Yes
RFB2L, RFB2L1	2	RES 8.06K OHM 1/10W 1% 0603 SMD	8.06K	1%	603	Vishay/Dale	CR-CW06038K06FK-EA	Yes
RFB3L, RFB3L1	2	RES 20K OHM 1/10W 1% 0603 SMD	20.0K	1%	603	Vishay/Dale	CR-CW060320K0FK-EA	Yes
RIDV2, RIDV3, RIDV4, RSNB2, RSNB3	5	RES 10.0 OHM 1/10W 1% 0603 SMD	10.0	1%	603	Vishay/Dale	CR-CW060310R0FK-EA	Yes
D1	1	DIODE SCHOTTKY 4.0 A 40 V SMB	40 V / 4.0 A	N/A	MBR340MFS	ON Semiconductor	NRVB440MF-ST1G	No
D2	1	DIODE SCHOTTKY 40 V 1 A SMA	40 V / 1.0 A	N/A	SMA_DIODE	ON Semiconductor	NRVBA140T3G	No

BILL OF MATERIALS FOR THE NCV97400GEVB

Reference Designator(s)	Qty	Description	Value	Tolerance	Footprint	Manufacturer	Manufacturer's Part Number	Substitution Allowed
L0, L3	2	High Current Shielded Inductor 1.0 μH, 8.7 A	1.0 μH	20%	XAL4020−102ME	Coilcraft	XAL4020−102ME	No
L1	1	High Current Shielded Inductor 4.7 μH, 4.5 A	4.7 μH	20%	XAL4030−472ME	Coilcraft	XAL4030−472ME	No
L2	1	High Current Shielded Inductor 2.2 μH, 5.6 A	2.2 μH	20%	XAL4020−222ME	Coilcraft	XAL4020−222ME	No
L4	1	Shielded Power Inductor 4.7 μH, 1.0 A	4.7 μH	20%	XFL3012−472ME	Coilcraft	XFL3012−472ME	No
EN1, EN2, EN3, PGND1_1, PGND1_2, PGND2_1, PGND3_1, PGND4_1, RST1B, RST2B, RST3B, RSTB4, SW1, SW2, SW3, SW4, SYNCI, VBAT, VIN2, VOUT1_1, VOUT2_1, VOUT3_1, VOUT4, WDI	24	PIN INBOARD .042" HOLE 1000/PKG	N/A	N/A	TP	Vector Electronics	K24C/M	Yes
GND0, GND1, GND2, GND3, VBAT1, VOUT1, VOUT2, VOUT3	8	CONN JACK BANANA UNINS PANEL MOU	N/A	N/A	BANANA	Emerson Network Power Connectivity Johnson	108−0740−001	No
J1, J3, J4, J5, J6	5	CONN HEADER 2POS .100 VERT GOLD	N/A	N/A	JMP	Molex Connector Corporation	22−28−4023	Yes
	5	CONN JUMPER SHORTING GOLD	N/A	N/A	JMP	Sullins Connector Solutions	SSC02SYAN	Yes
COMP1, DRV1, FB2, FB3, RID1 through RID8, TP2, VIND	Do Not Populate	CIRCUIT PIN PRNTD .020"D .425"L	N/A	N/A	SMALLTP	Mill−Max Manufacturing Corp.	3128−2−00−15−00−00−08−0	Yes
U1	1	Automotive Multi−Output PMU (3 Bucks, 1 Boost)	N/A	N/A	QFN32	ON Semiconductor	NCV97400MW00-R2G	No

onsemi, onsemi, and other names, marks, and brands are registered and/or common law trademarks of Semiconductor Components Industries, LLC dba "**onsemi**" or its affiliates and/or subsidiaries in the United States and/or other countries. **onsemi** owns the rights to a number of patents, trademarks, copyrights, trade secrets, and other intellectual property. A listing of **onsemi**'s product/patent coverage may be accessed at www.onsemi.com/site/pdf/Patent−Marking.pdf. **onsemi** is an Equal Opportunity/Affirmative Action Employer. This literature is subject to all applicable copyright laws and is not for resale in any manner.

The evaluation board/kit (research and development board/kit) (hereinafter the "board") is not a finished product and is not available for sale to consumers. The board is only intended for research, development, demonstration and evaluation purposes and will only be used in laboratory/development areas by persons with an engineering/technical training and familiar with the risks associated with handling electrical/mechanical components, systems and subsystems. This person assumes full responsibility/liability for proper and safe handling. Any other use, resale or redistribution for any other purpose is strictly prohibited.

THE BOARD IS PROVIDED BY ONSEMI TO YOU "AS IS" AND WITHOUT ANY REPRESENTATIONS OR WARRANTIES WHATSOEVER. WITHOUT LIMITING THE FOREGOING, ONSEMI (AND ITS LICENSORS/SUPPLIERS) HEREBY DISCLAIMS ANY AND ALL REPRESENTATIONS AND WARRANTIES IN RELATION TO THE BOARD, ANY MODIFICATIONS, OR THIS AGREEMENT, WHETHER EXPRESS, IMPLIED, STATUTORY OR OTHERWISE, INCLUDING WITHOUT LIMITATION ANY AND ALL REPRESENTATIONS AND WARRANTIES OF MERCHANTABILITY, FITNESS FOR A PARTICULAR PURPOSE, TITLE, NON−INFRINGEMENT, AND THOSE ARISING FROM A COURSE OF DEALING, TRADE USAGE, TRADE CUSTOM OR TRADE PRACTICE.

onsemi reserves the right to make changes without further notice to any board.

You are responsible for determining whether the board will be suitable for your intended use or application or will achieve your intended results. Prior to using or distributing any systems that have been evaluated, designed or tested using the board, you agree to test and validate your design to confirm the functionality for your application. Any technical, applications or design information or advice, quality characterization, reliability data or other services provided by **onsemi** shall not constitute any representation or warranty by **onsemi**, and no additional obligations or liabilities shall arise from **onsemi** having provided such information or services.

onsemi products including the boards are not designed, intended, or authorized for use in life support systems, or any FDA Class 3 medical devices or medical devices with a similar or equivalent classification in a foreign jurisdiction, or any devices intended for implantation in the human body. You agree to indemnify, defend and hold harmless **onsemi**, its directors, officers, employees, representatives, agents, subsidiaries, affiliates, distributors, and assigns, against any and all liabilities, losses, costs, damages, judgments, and expenses, arising out of any claim, demand, investigation, lawsuit, regulatory action or cause of action arising out of or associated with any unauthorized use, even if such claim alleges that **onsemi** was negligent regarding the design or manufacture of any products and/or the board.

This evaluation board/kit does not fall within the scope of the European Union directives regarding electromagnetic compatibility, restricted substances (RoHS), recycling (WEEE), FCC, CE or UL, and may not meet the technical requirements of these or other related directives.

FCC WARNING − This evaluation board/kit is intended for use for engineering development, demonstration, or evaluation purposes only and is not considered by **onsemi** to be a finished end product fit for general consumer use. It may generate, use, or radiate radio frequency energy and has not been tested for compliance with the limits of computing devices pursuant to part 15 of FCC rules, which are designed to provide reasonable protection against radio frequency interference. Operation of this equipment may cause interference with radio communications, in which case the user shall be responsible, at its expense, to take whatever measures may be required to correct this interference.

onsemi does not convey any license under its patent rights nor the rights of others.

LIMITATIONS OF LIABILITY: **onsemi** shall not be liable for any special, consequential, incidental, indirect or punitive damages, including, but not limited to the costs of requalification, delay, loss of profits or goodwill, arising out of or in connection with the board, even if **onsemi** is advised of the possibility of such damages. In no event shall **onsemi**'s aggregate liability from any obligation arising out of or in connection with the board, under any theory of liability, exceed the purchase price paid for the board, if any.

The board is provided to you subject to the license and other terms per **onsemi**'s standard terms and conditions of sale. For more information and documentation, please visit www.onsemi.com.

ADDITIONAL INFORMATION

TECHNICAL PUBLICATIONS:
Technical Library: www.onsemi.com/design/resources/technical−documentation
onsemi Website: www.onsemi.com

ONLINE SUPPORT: www.onsemi.com/support
For additional information, please contact your local Sales Representative at www.onsemi.com/support/sales