NCV97311MW50AGEVB

NCV97311A Evaluation Board User's Manual

ON Semiconductor®

www.onsemi.com

EVAL BOARD USER'S MANUAL

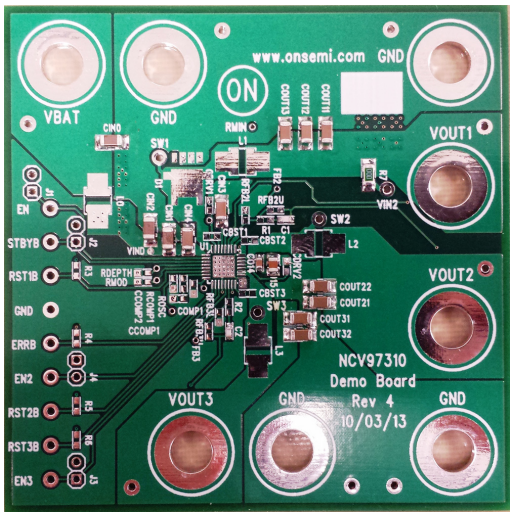

Figure 1. Evaluation Board Photo

Description

The NCV97311A is 3−output regulator consisting of a low−Iq battery−connected 3 A 2 MHz non−synchronous switcher and two low−voltage 1.5 A 2 MHz synchronous switchers; all using integrated power transistors.

The high−voltage switcher is capable of converting a 4.1 V to 18 V battery input to a 5 V output at a constant 2 MHz switching frequency, delivering up to 3 A. In overvoltage conditions up to 36 V, the switching frequency folds back to 1 MHz; in load dump conditions up to 45 V the regulator shuts down.

The output of the battery−connected buck regulator serves as the low voltage input for the 2 synchronous switchers. Each downstream output is adjustable from 1.2 V to 3.3 V, with a 1.5 A current limit and a constant 2 MHz switching frequency. Each switcher has independent enable and reset pins, giving extra power management flexibility.

For low−Iq operating mode the low−voltage switchers are disabled, and the standby rail is supplied by a low−Iq LDO (up to 150 mA) with a typical Iq of 30 μA. The LDO regulator is in parallel to the high−voltage switcher, and is activated when the switcher is forced in standby mode.

All 3 SMPS outputs use peak current mode control with internal slope compensation, internally−set soft−start, battery undervoltage lockout, battery overvoltage protection, cycle−by−cycle current limiting, hiccup mode short−circuit protection and thermal shutdown. An error flag is available for diagnostics.

Key Features

- Low Quiescent Current in Standby Mode
- 2 Microcontroller Enabled Low Voltage Synchronous Buck Converters
- Large Conversion Ratio of 18 V to 3.3 V Battery Connected Switcher
- Wide Input of 4.1 to 45 V with Undervoltage Lockout (UVLO)
- Fixed Frequency Operation Adjustable from 2.0 to 2.6 MHz
- Internal 1.5 ms Soft−starts
- Cycle−by−cycle Current Limit Protections
- Hiccup Overcurrent Protections (OCP)
- Individual Reset Pins with Adjustable Delays
- These Devices are Pb−Free, Halogen Free/BFR Free and are RoHS Compliant

Typical Applications

- Infotainment, Body Electronics, Telematics, ECU

© Semiconductor Components Industries, LLC, 2019

April, 2019 − Rev. 0

Publication Order Number:
EVBUM2621/D

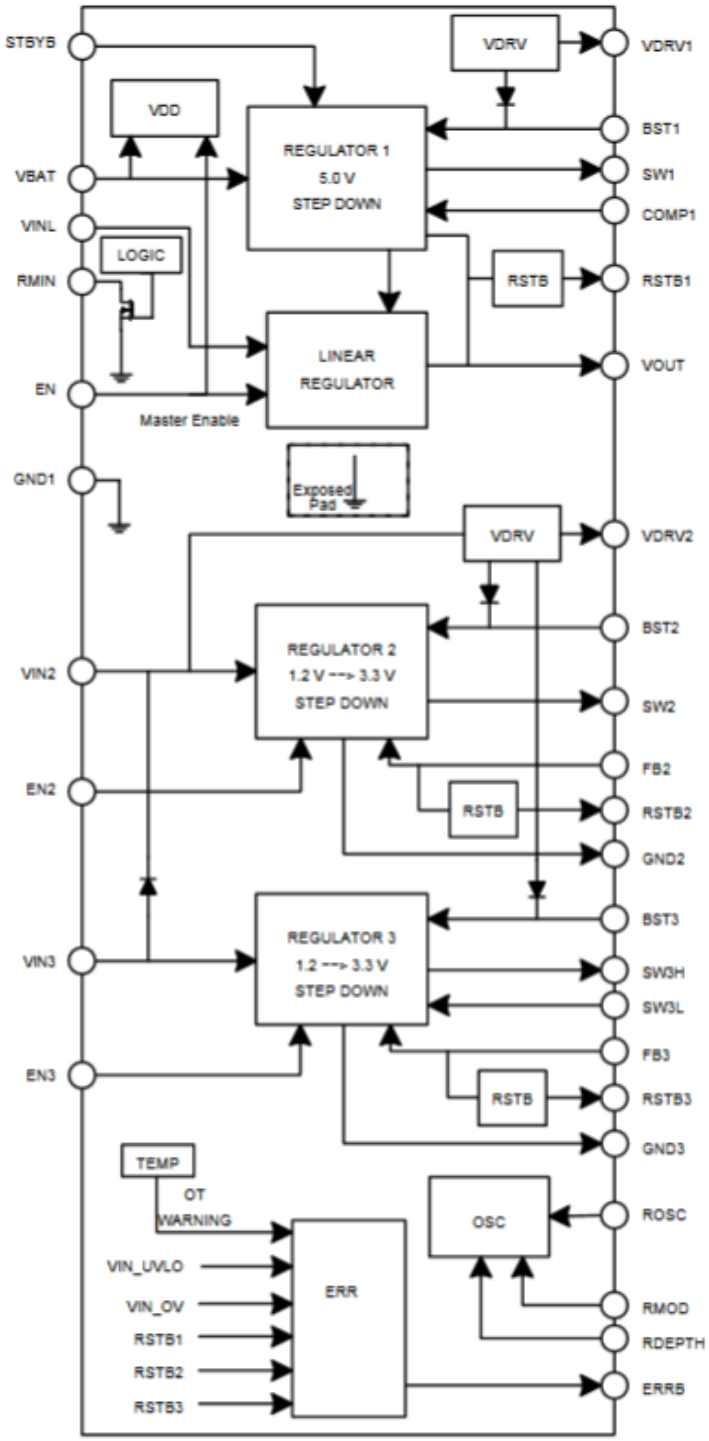

Figure 2. NCV9731150A Block Diagram

TYPICAL APPLICATION

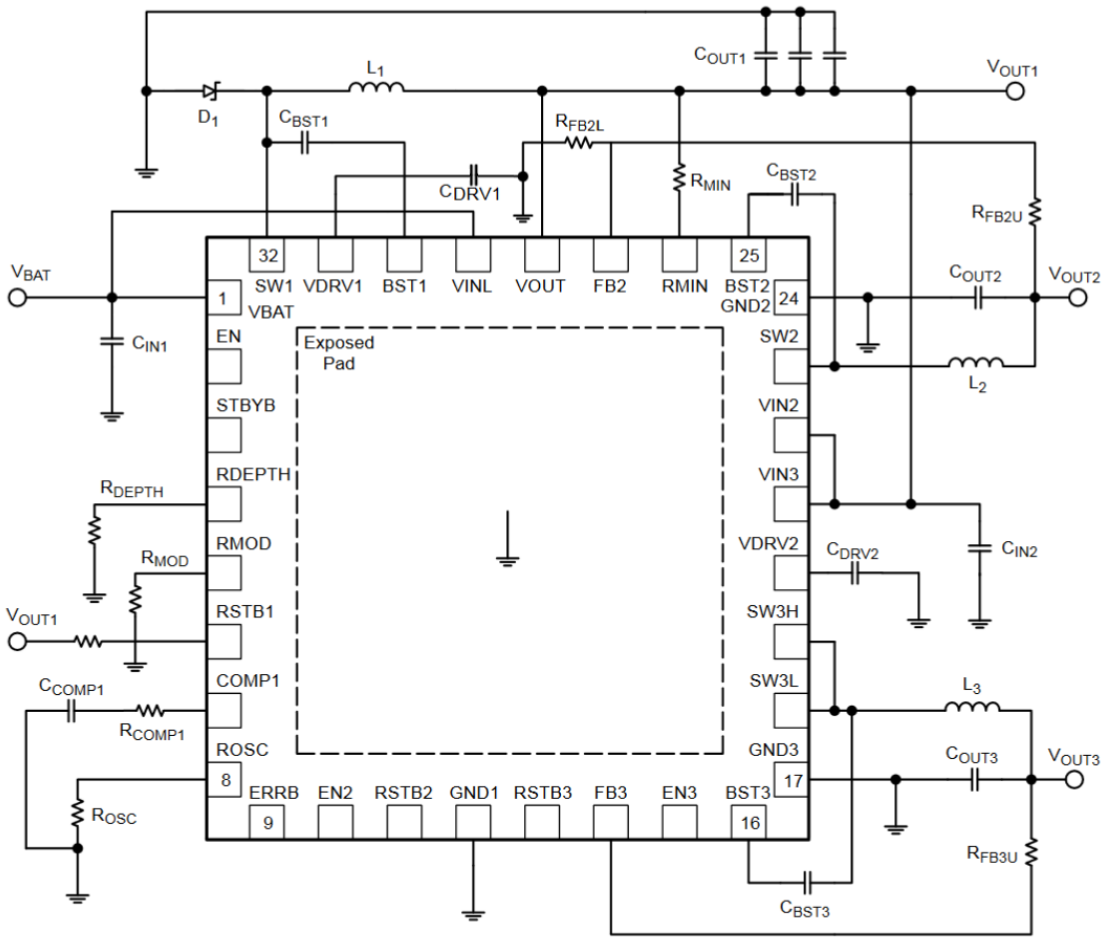

Figure 3. Typical Application

Table 1. EVALUATION BOARD TERMINALS

Pin Name	Function
VBAT	Positive dc input voltage
GND	Common dc return
VOUT1	Positive 5.0 V dc output voltage (LDO / switcher 1)
VOUT2	Positive DC output voltage (switcher 2)
VOUT3	Positive DC output voltage (switcher 3)
EN	Master enable input. Includes jumper J3 to connect to VBAT
STBYB	Standby enable input. Includes jumper J4 to connect to VBAT
EN2	Switcher 2 enable input. Includes jumper J6 to connect to VOUT1
EN3	Switcher 3 enable input. Includes jumper J5 to connect to VOUT1
ERRB	Error flag combining temperature and input and output voltage sensing
RST1B	Reset with adjustable delay. Goes low when the VOUT1 is out of regulation
RST2B	Reset with adjustable delay. Goes low when the VOUT2 is out of regulation
RST3B	Reset with adjustable delay. Goes low when the VOUT3 is out of regulation

Table 2. ABSOLUTE MAXIMUM RATINGS (Voltages are with respect to GND)

Rating	Value	Unit
Dc Supply Voltage (VBAT, EN, STBYB)	−0.3 to 36	V
Dc Supply Voltage (VIN2, VIN3)	−0.3 to 12	V
Dc Supply Voltage (RSTB1, RSTB2, RSTB3, ERRB, EN2, EN3)	−0.3 to 6	V
Storage Temperature Range	−55 to 150	°C

Stresses exceeding those listed in the Maximum Ratings table may damage the device. If any of these limits are exceeded, device functionality should not be assumed, damage may occur and reliability may be affected.

Table 3. ELECTRICAL CHARACTERSITICS (T_A = 25°C, 4.5 ≤ VIN ≤ 18 V, IOUT ≤ 2 A, unless otherwise specified)

Characteristic	Conditions	Typical Value	Unit
REGULATION			
Output Voltage (VOUT1)		5.0	V
Output Voltage (VOUT2)		3.3	V
Output Voltage (VOUT3)		1.2	V
Line Regulation (VOUT1)	I_{OUT1} = 1.0 A	0.03	%
Line Regulation (VOUT2)	I_{OUT2} = 1.0 A	0.01	%
Line Regulation (VOUT3)	I_{OUT3} = 1.0 A	0.001	%
Load Regulation (VOUT1)	V_{BAT} = 13.2 V	0.3	%
Load Regulation (VOUT2)	V_{BAT} = 13.2 V	0.02	%
Load Regulation (VOUT3)	V_{BAT} = 13.2 V	0.03	%
SWITCHING			
Switching Frequency		2.0	MHz
Soft−start Time		1.4	ms
R_{OSC} Frequency Range	50 kΩ ≥ R_{OSC} ≥ 10 kΩ	2.0 to 2.6	MHz
CURRENT LIMIT			
Peak Current Limit (VOUT1)	STBYB = 0 V	0.2	A
Peak Current Limit (VOUT1)	STBYB = 5 V	4.4	A
Peak Current Limit (VOUT2)		2.9	A
Peak Current Limit (VOUT3)		2.9	A
PROTECTION			
Input Undervoltage Lockout (UVLO)	V_{BAT} Decreasing	3.9	V
Input Overvoltage Protection	V_{BAT} Increasing	36	V
Thermal Warning	T_J Rising	150	°C
Thermal Shutdown	T_J Rising	170	°C

Product parametric performance is indicated in the Electrical Characteristics for the listed test conditions, unless otherwise noted. Product performance may not be indicated by the Electrical Characteristics if operated under different conditions.

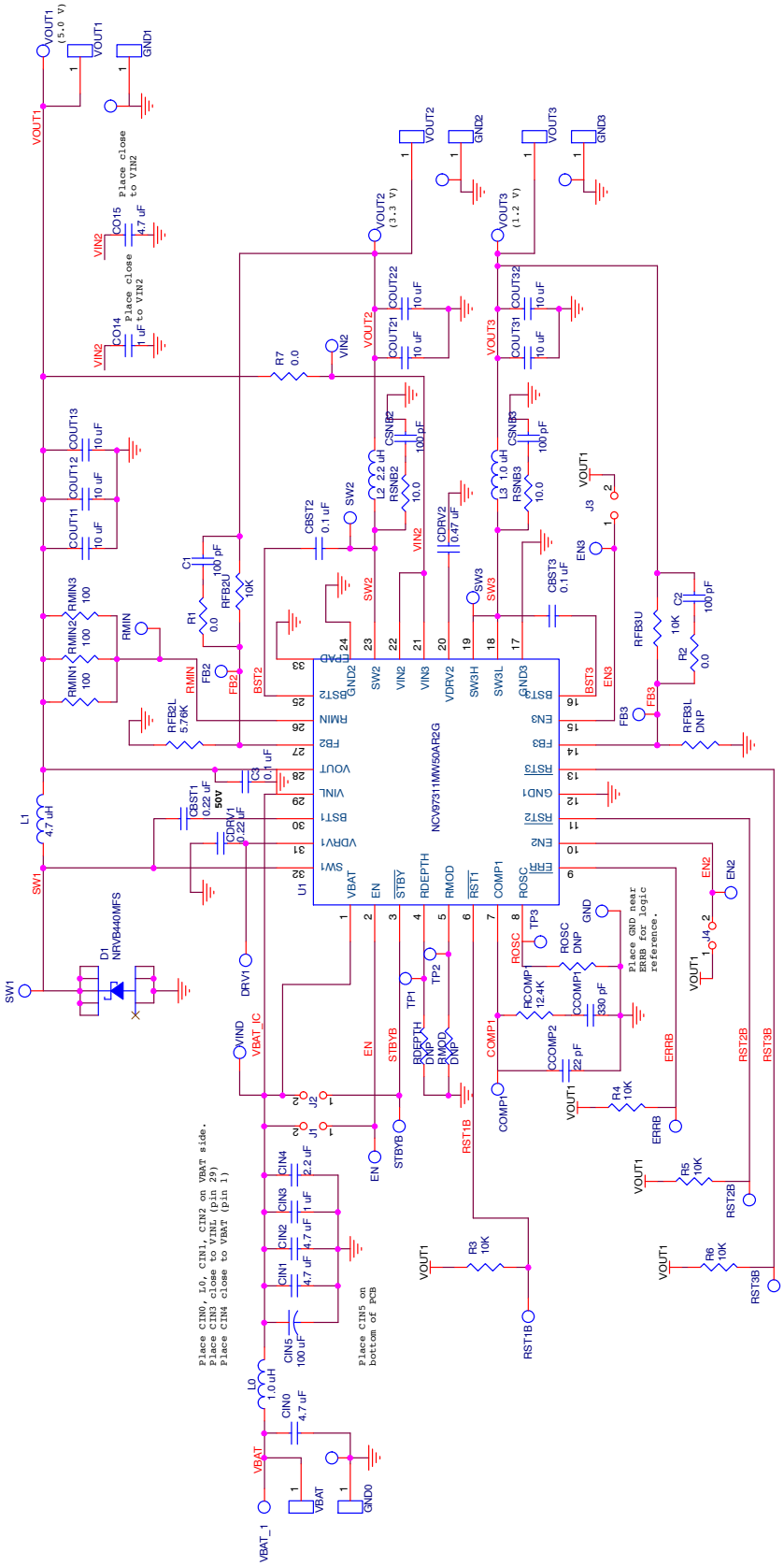

Figure 4. NCV97311AGEVB 5.0 V Board Schematic

Operational Guidelines

1. Connect a dc input voltage, within the 6.0 V to 36 V range, between VBAT and GND.
2. Connect a load (< 150 mA) between VOUT1 and GND
3. Connect a dc enable voltage, within the 2.0 V to 36 V range, between EN and GND. This will enable the internal LDO for low Iq mode. You may use jumper J1 to connect EN directly to VBAT.
   a. The VOUT1 signal should be 5.0 V.
   b. The VOUT2 signal should be disabled (regardless of EN2 state) and read 0 V.
   c. The VOUT3 signal should be disabled (regardless of EN3 state) and read 0 V.
4. Connect a dc enable voltage, within the 2.0 V to 36 V range, between STBYB and GND. This will exit low Iq mode and power up switcher 1. You may use jumper J2 to connect STBYB directly to VBAT.
   The VOUT1 signal should still be 5.0 V. You may now add a higher load to VOUT1.
5. Connect a dc enable voltage, within the 2.0 V to 6 V range, between EN2 and GND. This will power up switcher 2. You may use jumper J4 to connect EN2 directly to VOUT1.
   The VOUT2 signal should be 3.3 V.
6. Connect a dc enable voltage, within the 2.0 V to 6 V range, between EN3 and GND. This will power up switcher 3. You may use jumper J3 to connect EN3 directly to VOUT1.
   The VOUT3 signal should be 1.2 V.

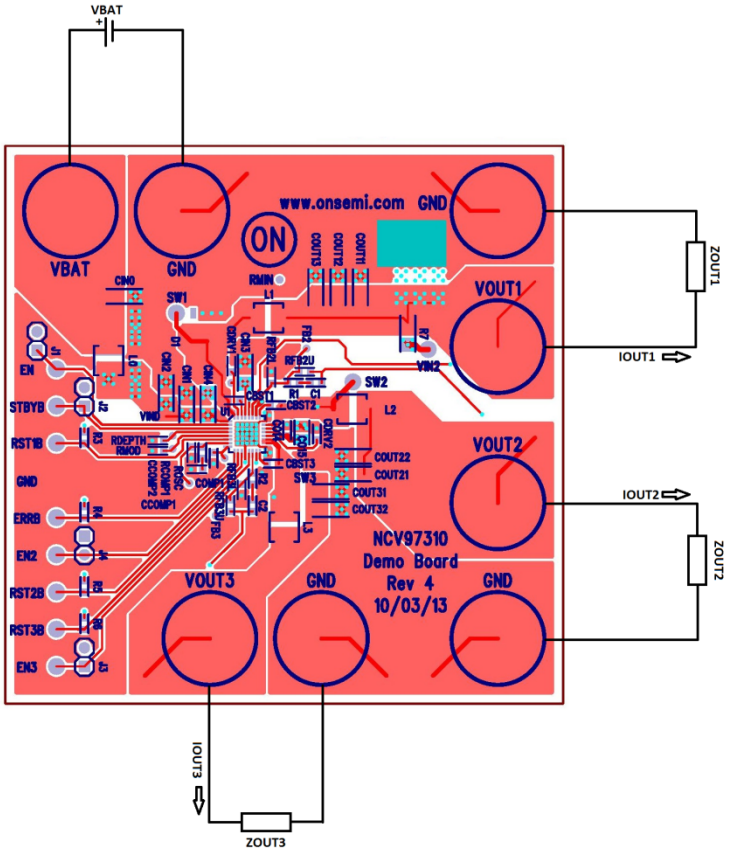

Figure 5. NCV97311A Board Connections

APPLICATION INFORMATION

Output Voltage Selection

The voltage outputs for switcher 2 and switcher 3 are adjustable and can be set with a resistor divider. The FB reference for both switchers is 1.2 V.

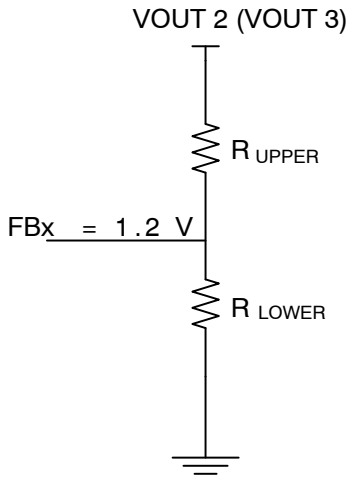

The upper resistor is set to 10 kΩ and is part of the feedback loop. To maintain stability over all conditions, it is recommended to change the only the lower feedback resistor to set the output voltage. Use the following equation:

$$R_{LOWER} = R_{UPPER} \frac{V_{FB}}{V_{OUT} - V_{FB}}$$

Some common setups are listed below:

Desired Output (V)	VREF (V)	R_{UPPER} (kΩ, 1%)	R_{LOWER} (kΩ, 1%)
1.2	1.2	10.0	NP
1.5	1.2	10.0	40.0
1.8	1.2	10.0	20.0
2.5	1.2	10.0	9.31
3.3	1.2	10.0	5.76

Spread Spectrum

In SMPS devices, switching translates to higher efficiency. Unfortunately, the switching leads to a much noisier EMI profile. We can greatly decrease some of the radiated emissions with some spread spectrum techniques. Spread spectrum is used to reduce the peak electromagnetic emissions of a switching regulator.

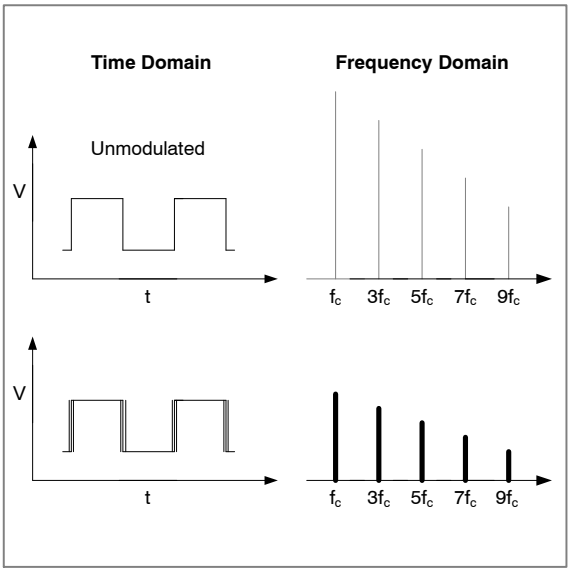

The spread spectrum used in the NCV97311A is an “up−spread” technique, meaning the switching frequency is spread upward from the 2.0 MHz base frequency. For example, a 5 % spread means that the switching frequency is swept (spread) from 2.0 MHz up to 2.1 MHz in a linear fashion – this is called the modulation depth. The rate at which this spread takes place is called the modulation frequency. For example, a 10 kHz modulation frequency means that the frequency is swept from 2.0 MHz to 2.1 MHz in 50 µs and then back down from 2.1 MHz to 2.0 MHz in 50 µs.

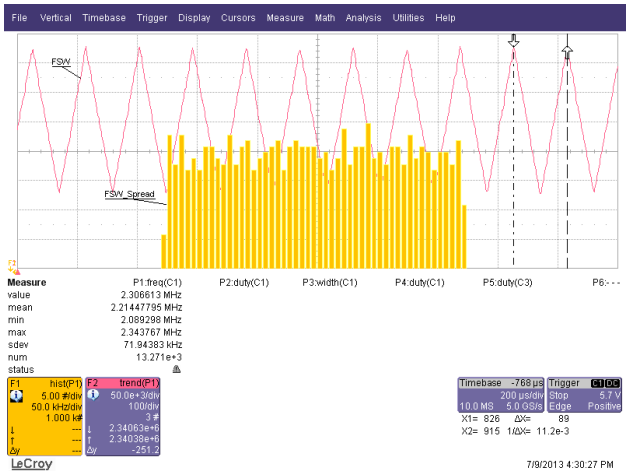

The modulation depth and modulation frequency are each set by 2 external resistors to GND. The modulation frequency can be set from 5 kHz up to 50 kHz using a resistor from the RMOD pin to GND. The modulation depth can be set from 3% up to 30% of the nominal switching frequency using a resistor from the RDEPTH pin to GND. Please see the curves below for typical values:

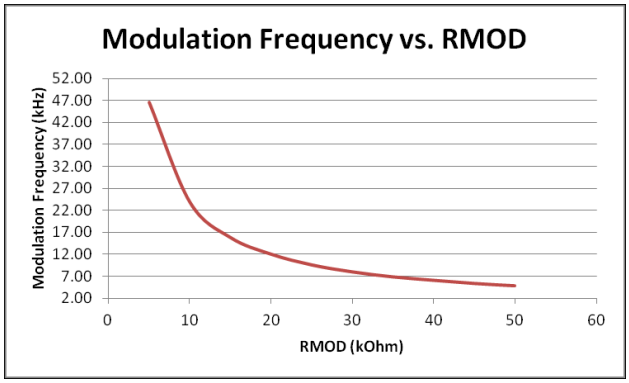

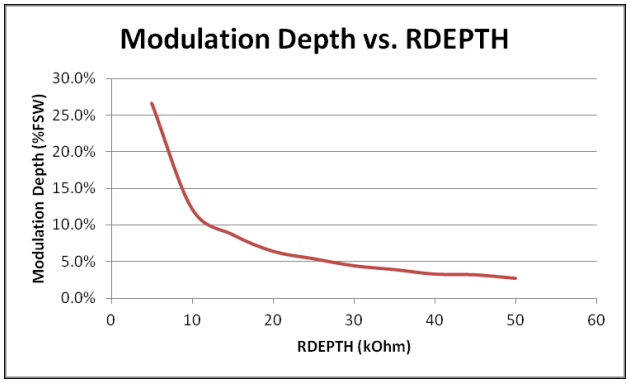

Spread spectrum is automatically turned off when there is a short to GND or an open circuit on either the RMOD pin or the RDEPTH pin. Please be sure that the ROSC pin is an open circuit when using spread spectrum.

TYPICAL PERFORMANCE

Efficiency

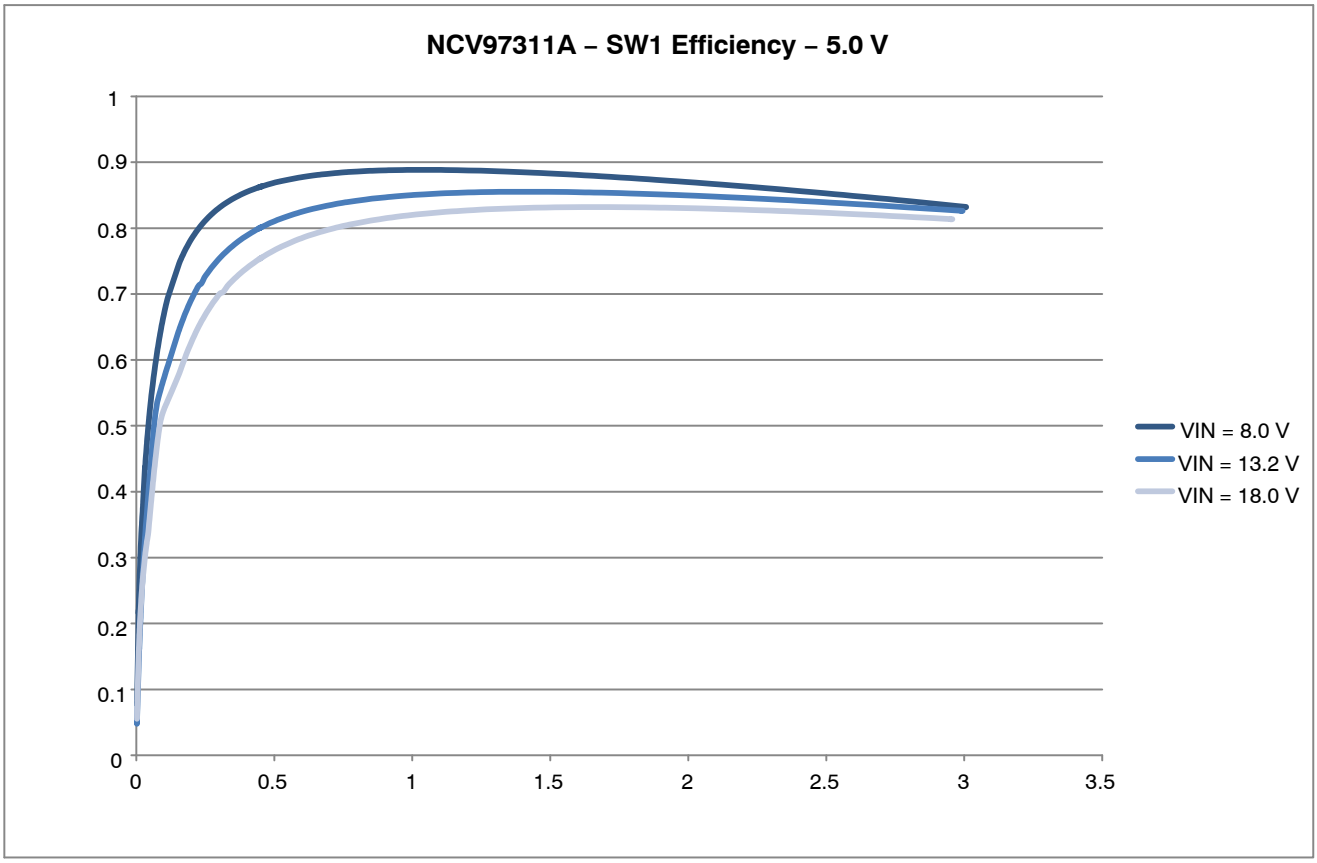

Figure 6. Efficiency for SW1 with a 5.0 V Output

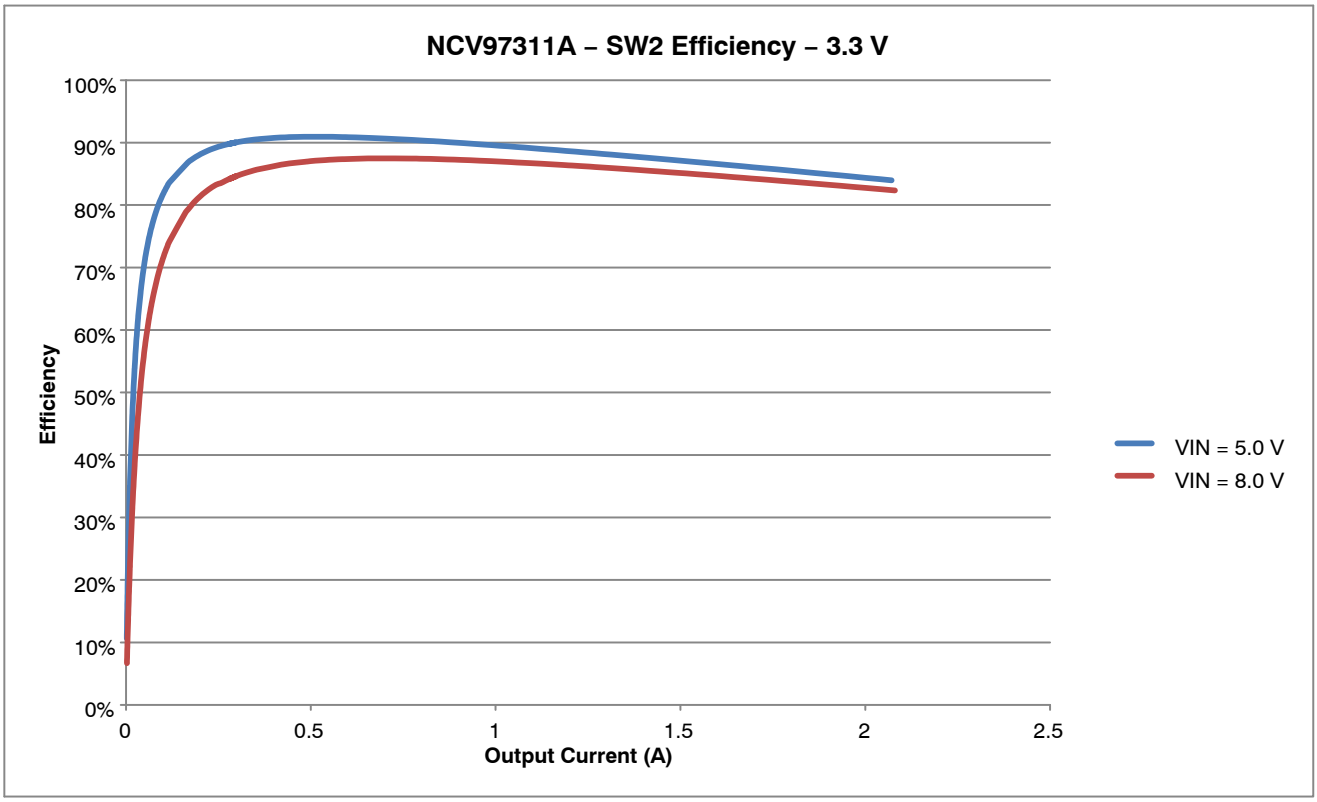

Figure 7. Efficiency for SW2 with a 3.3 V Output

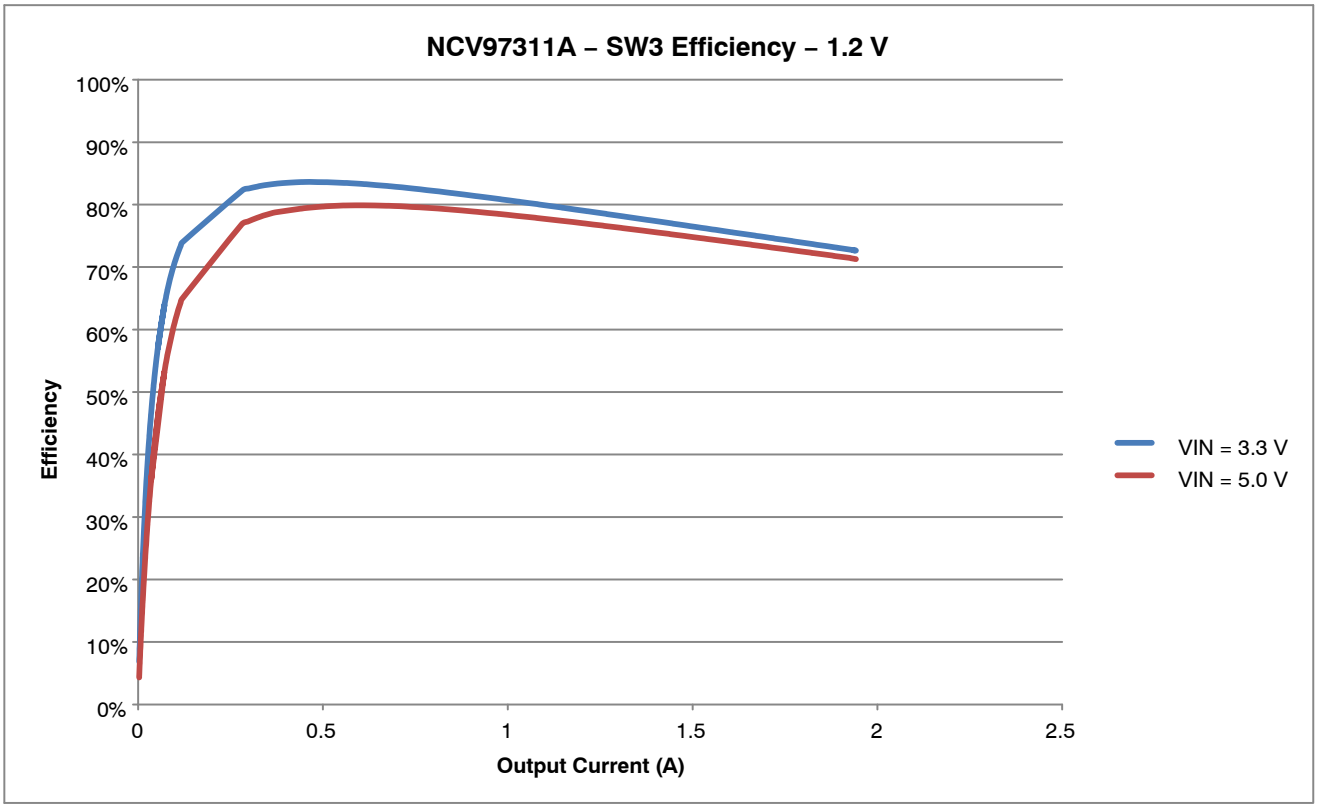

Figure 8. Efficiency for SW3 with a 1.2 V Output

Line Regulation

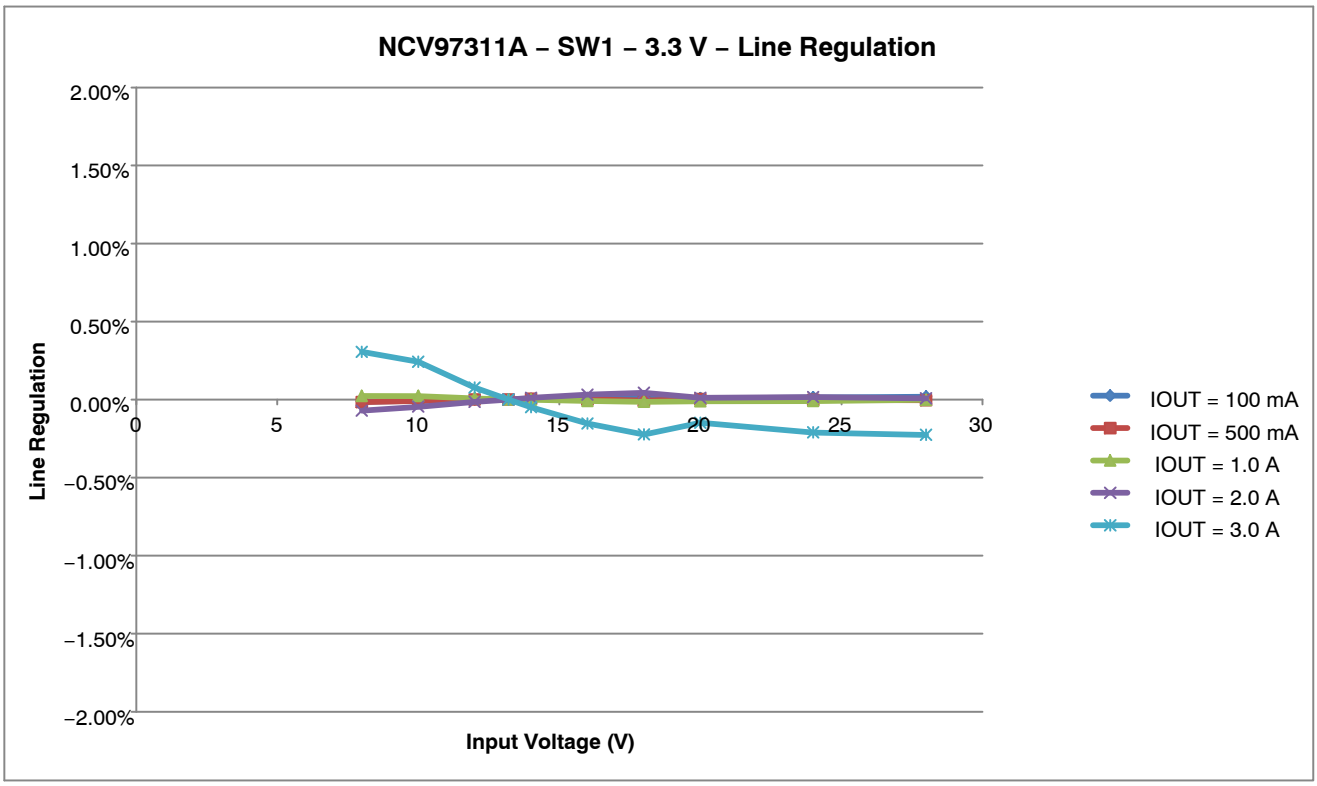

Figure 9. Line Regulation for SW1 with a 3.3 V Output

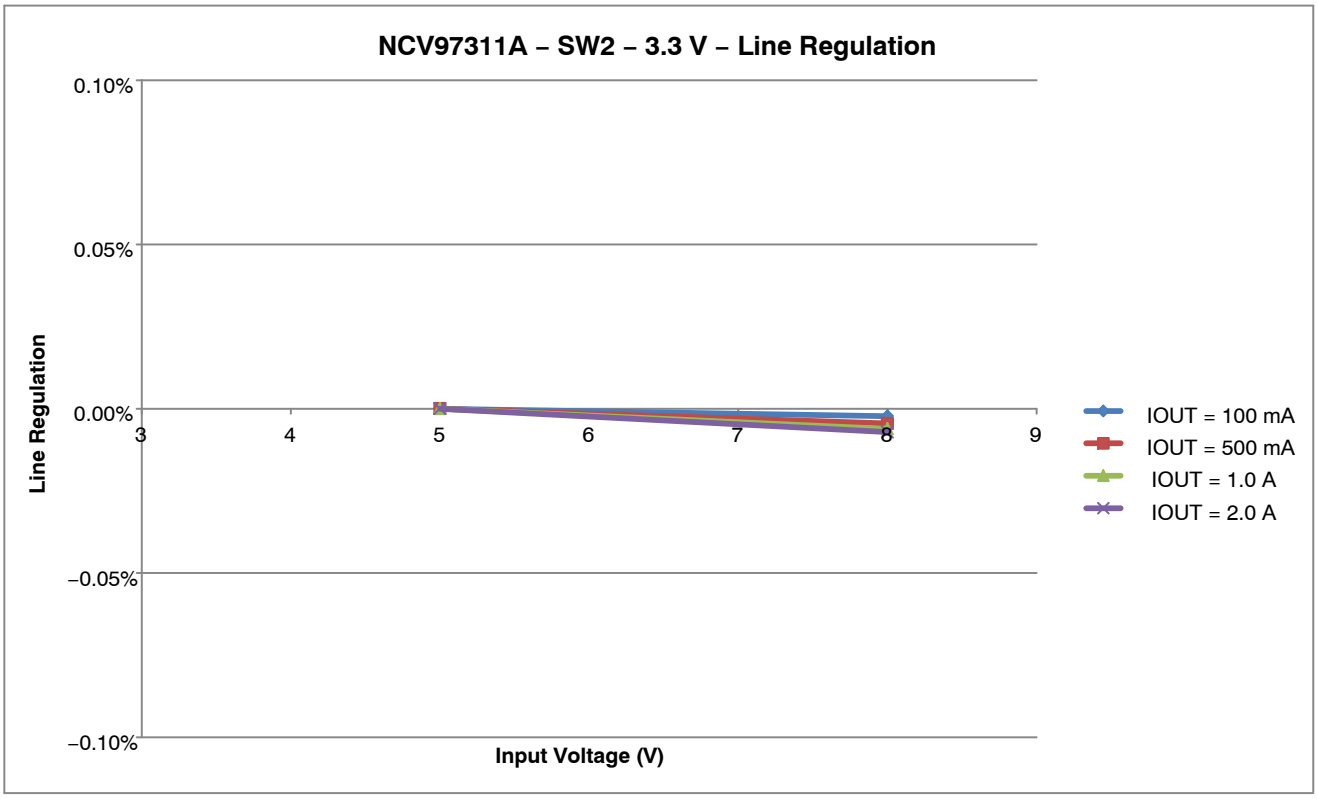

Figure 10. Line Regulation for SW2 with a 3.3 V Output

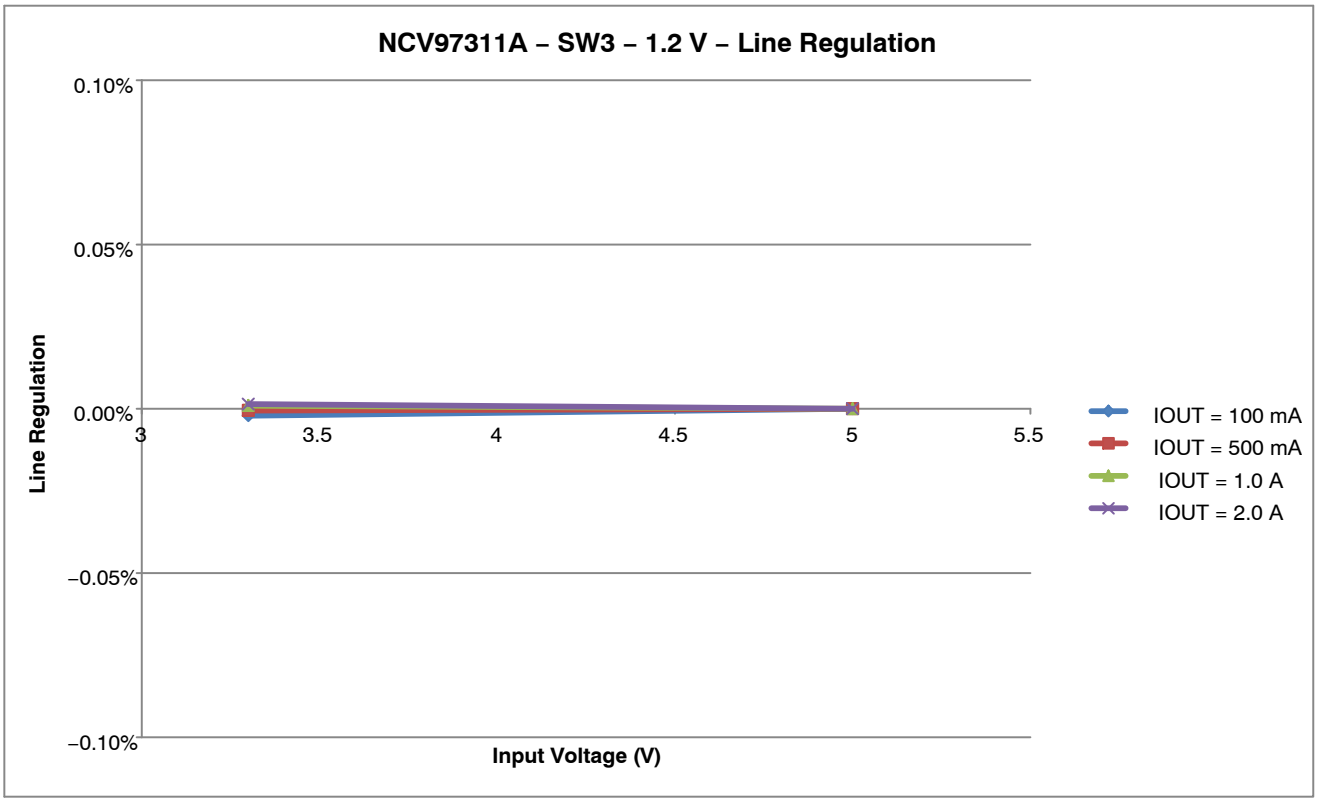

Figure 11. Line Regulation for SW3 with a 1.2 V Output

Load Regulation

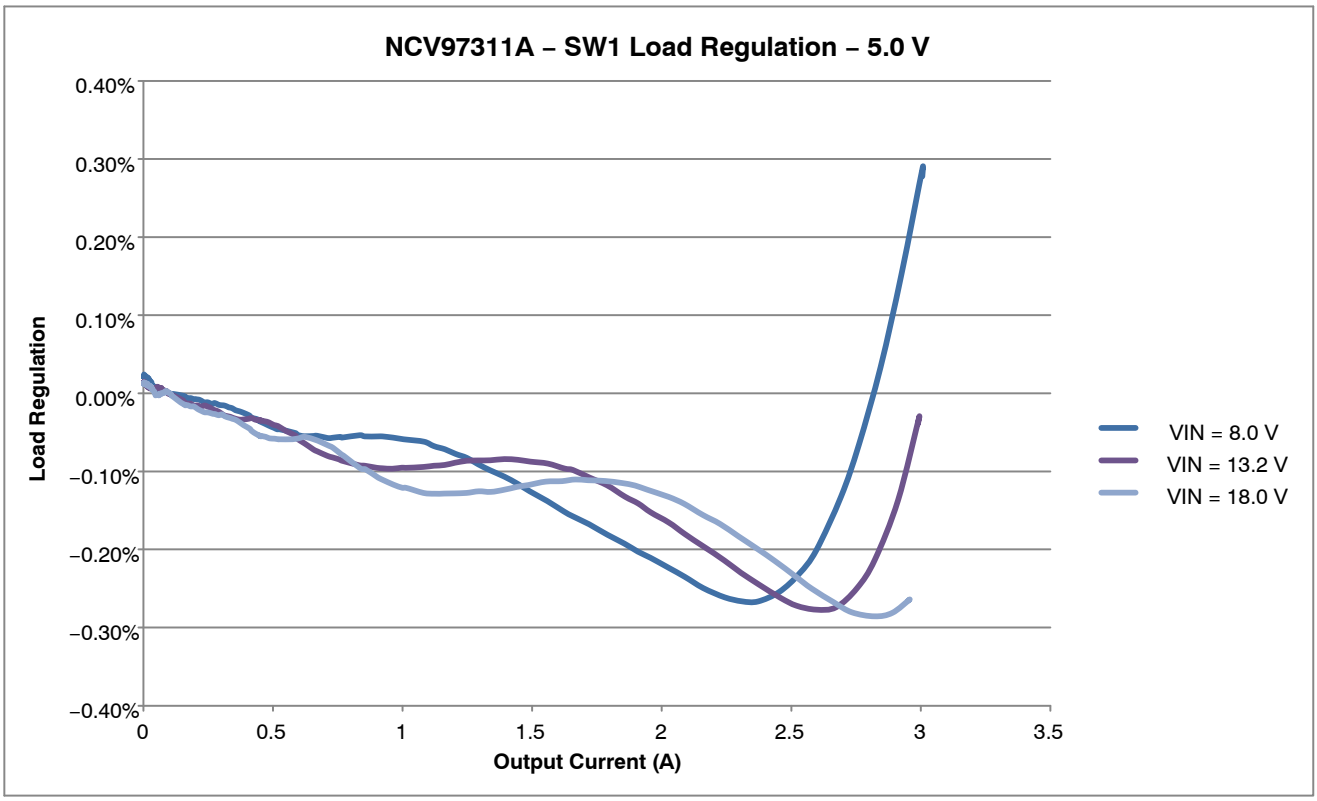

Figure 12. Load Regulation for SW1 with a 5.0 V Output

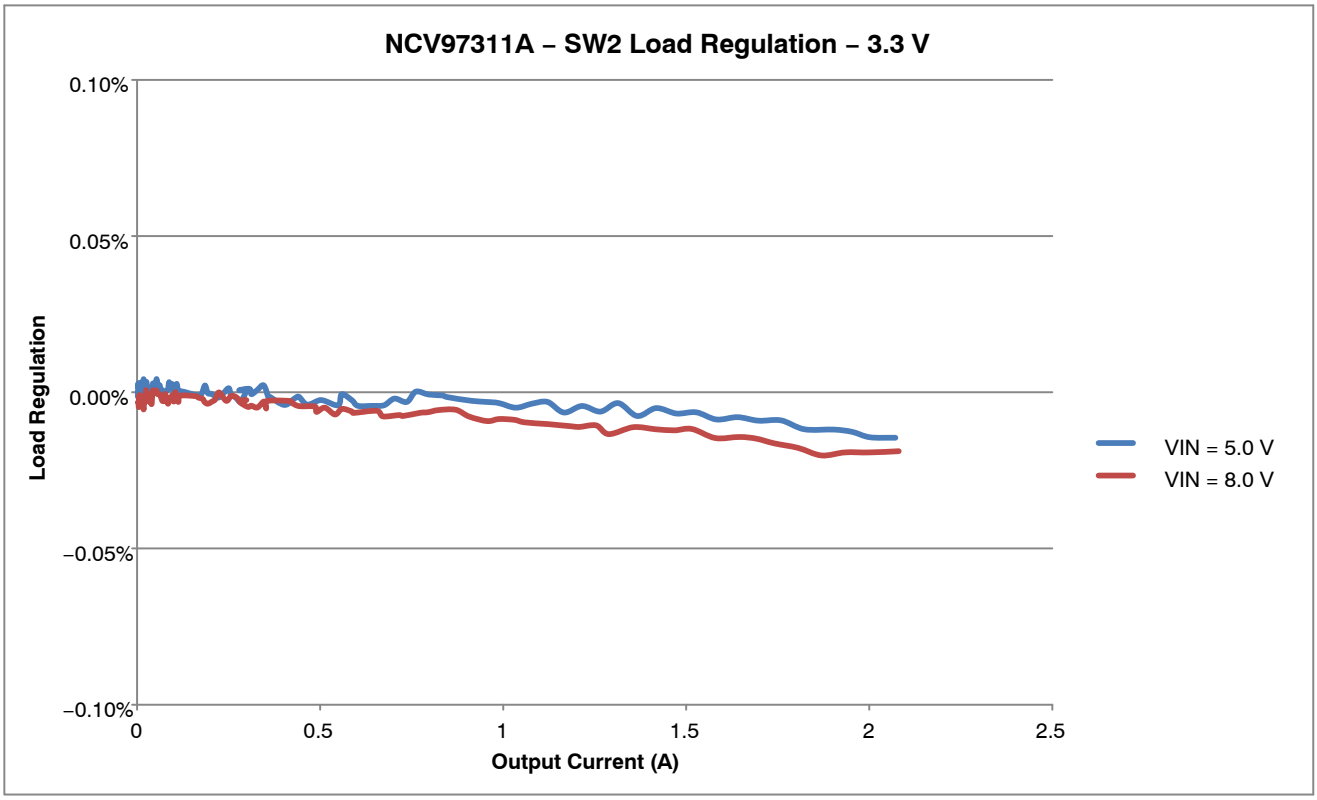

Figure 13. Load Regulation for SW2 with a 3.3 V Output

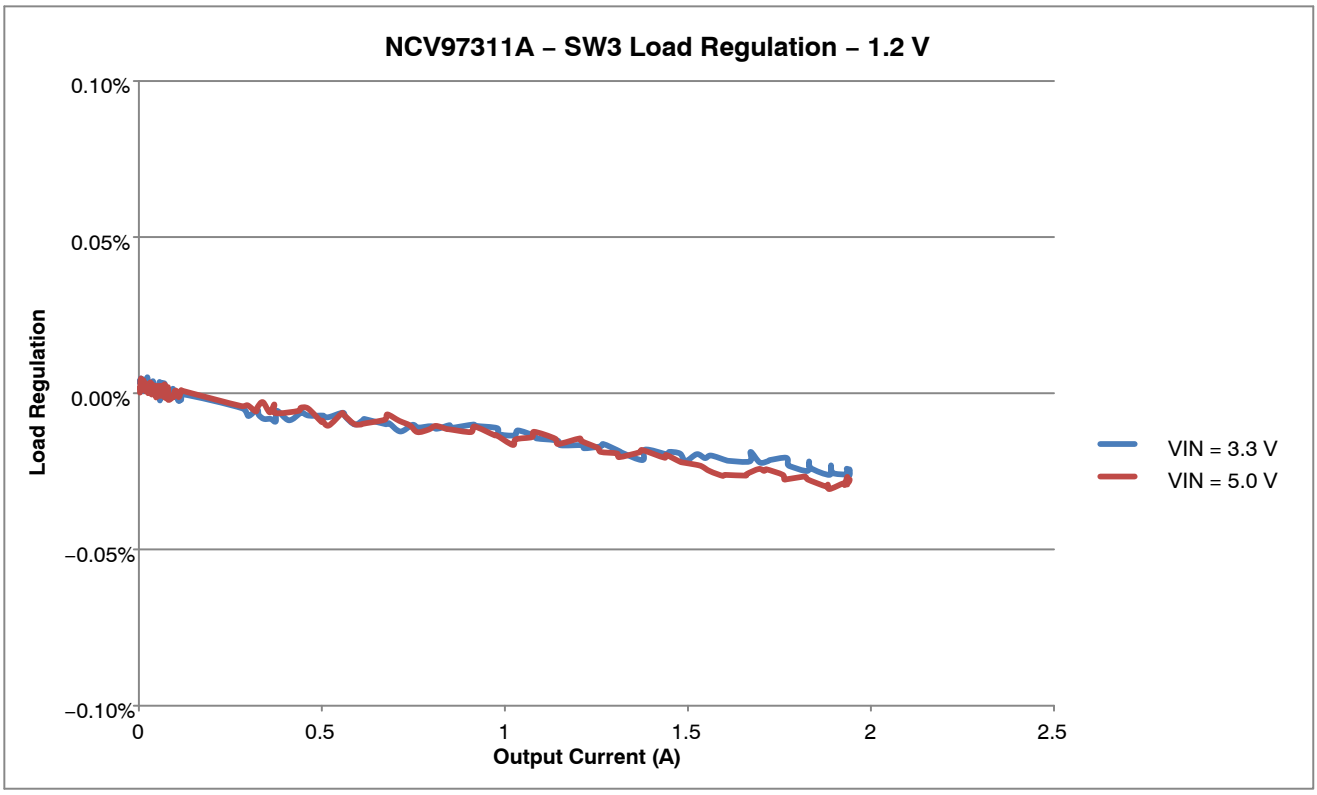

Figure 14. Load Regulation for SW3 with a 1.2 V Output

SCHEMATIC

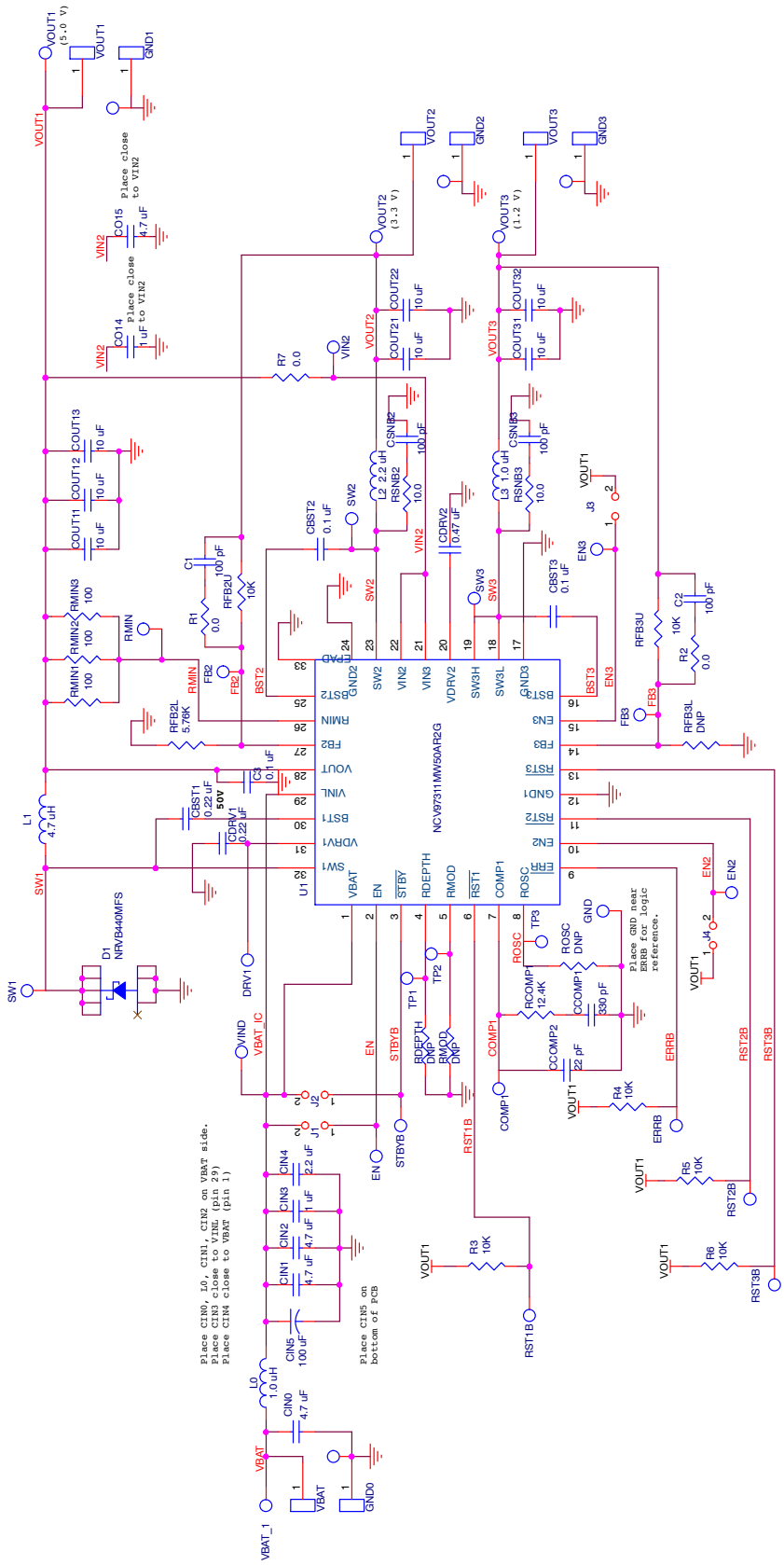
NCV97311MW50AR2G
U1
VBAT
EN
STBY
RDEPTH
RMOD
RST1
COMP1
ROSC
ERR
SW1
VDRV1
BST1
VINL
VOUT
FB2
RMIN
BST2
EPAD
GND2
SW2
VIN2
VIN3
VDRV2
SW3H
SW3L
GND3
BST3
EN3
FB3
RST3
GND1
RST2
EN2
VOUT1
VOUT2
VOUT3
GND1
GND2
GND3
VOUT1 (5.0 V)
VOUT2 (3.3 V)
VOUT3 (1.2 V)
VIN2
VBAT_IC
VBAT_1
GND0
SW1
SW2
SW3
EN
STBYB
RST1B
RST2B
RST3B
ERRB
COMP1
ROSC
GND
J1
J2
J3
J4
D1 NRVB440MFS
L1 4.7 uH
L0 1.0 uH
L2 2.2 uH
L3 1.0 uH
R1 0.0
R2 0.0
R3 10K
R4 10K
R5 10K
R6 10K
R7 0.0
C1 100 pF
C2 100 pF
C3 0.1 uF
CO14 1 uF
CO15 4.7 uF
CBST1 0.22 uF 50V
CBST2 0.1 uF
CBST3 0.1 uF
CDRV1 0.22 uF
CDRV2 0.47 uF
CSNB2 100 pF
CSNB3 100 pF
RSNB2 10.0
RSNB3 10.0
RFB2U 10K
RFB2L 5.76K
RFB3U 10K
RFB3L DNP
RMIN1 100
RMIN2 100
RMIN3 100
RCOMP1 12.4K
CCOMP1 330 pF
CCOMP2 22 pF
ROSC DNP
RDEPTH DNP
RMOD DNP
CIN1 4.7 uF
CIN2 4.7 uF
CIN3 1 uF
CIN4 2.2 uF
CIN5 100 uF
CIN0 4.7 uF
Place close to VIN2
Place close to VIN2
Place GND near ERRB for logic reference.
Place CIN0, L0, CIN1, CIN2 on VBAT side.
Place CIN3 close to VINL (pin 29)
Place CIN4 close to VBAT (pin 1)
Place CIN5 on bottom of PCB

PCB LAYOUT

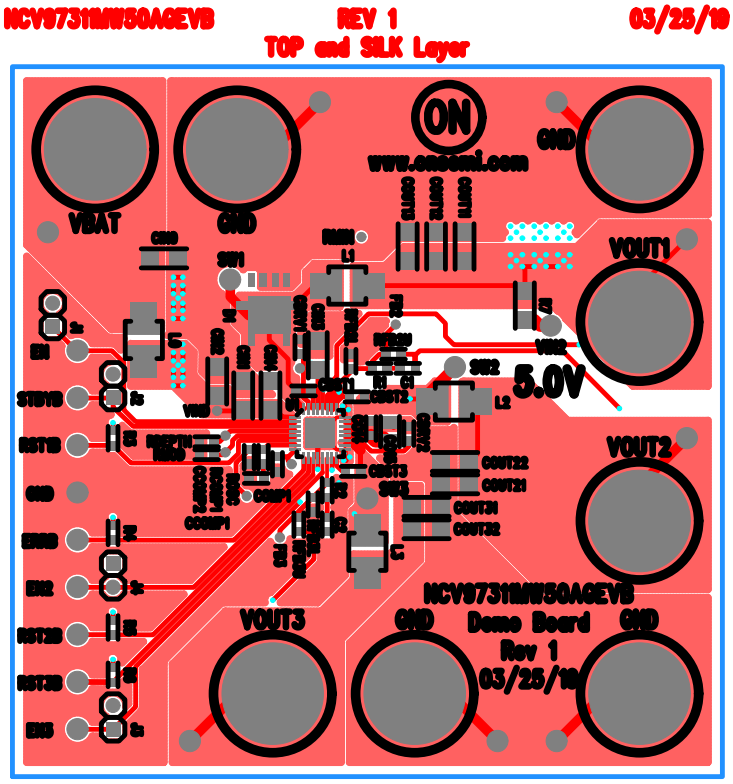

Figure 15. Top View

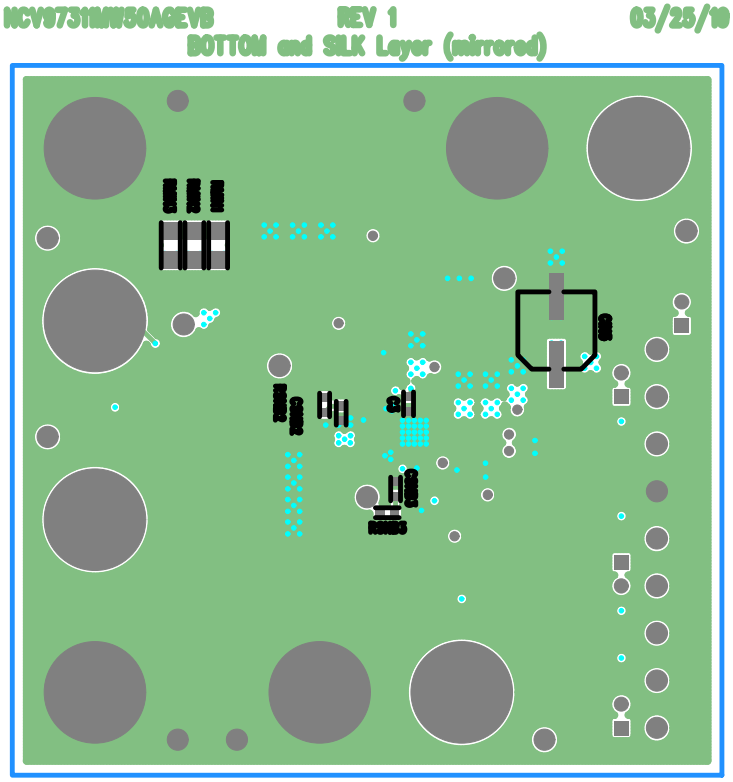

Figure 16. Bottom View

BILL OF MATERIALS

Table 4. BILL OF MATERIALS

Reference Designator(s)	Qty.	Description	Value	Tolerance	Footprint	Manufacturer	Manufacturer's Part Number	Substi-tution Allowed
C1, C2, CSNB2, CSNB3	4	CAP CER 100 pF 50 V 5% NP0 0603	100 pF	5%	603	Murata Electronics North America	GCM1885C1H101JA16D	Yes
C3, CBST1, CBST2, CBST3, CDRV1	3	CAP CER 0.1 μF 50 V 10% X7R 0603	0.1 μF	10%	603	Murata Electronics North America	GCM188R71H104KA57D	Yes
CBST1, CDRV1	2	CAP CER 0.22 μF 50 V 10% X7R 0603	0.22 μF	10%	603	Murata Electronics North America	GCM188R71H224KA64D	Yes
CCOMP1	1	CAP CER 330 pF 50 V 5% NP0 0603	330 pF	5%	603	Murata Electronics North America	GCM1885C1H331JA16D	Yes
CCOMP2	1	CAP CER 22 pF 50 V 5% NP0 0603	22 pF	5%	603	Murata Electronics North America	GCM1885C1H220JA16D	Yes
CDRV2	1	CAP CER 0.47 μF 16 V 10% X7R 0603	0.47 μF	10%	603	Murata Electronics North America	GCM188R71C474KA55D	Yes
CIN0, CIN1, CIN2	3	CAP CER 4.7 μF 50 V 10% X7R 1206	4.7 μF	10%	1206	TDK Corporation	C3216X7R1H475K160AC	Yes
CIN3	1	CAP CER 1.0 μF 50 V 10% X7R 1206	1.0 μF	10%	1206	Murata Electronics North America	GCM31MR71H105KA55L	Yes
CIN4	1	CAP CER 2.2 μF 50 V 10% X7R 1206	2.2 μF	10%	1206	Murata Electronics North America	GCM31CR71H225KA55L	Yes
CIN5	1	CAP ALUM 100 μF 50 V 20% SMD	100 μF	20%	FK_V_E	Chemi−Con	EMZA500ADA101MHA0G	Yes
CO14	1	CAP CER 1 μF 16 V 10% X7R 0603	1.0 μF	10%	603	Murata Electronics North America	GCM188R71C105KA64D	Yes
CO15	1	CAP CER 4.7 μF 16 V 10% X7R 0805	4.7 μF	10%	805	TDK Corporation	CGA4J3X7R1C475K125AB	Yes
COUT11, COUT12, COUT13, COUT21, COUT22, COUT31, COUT32	7	CAP CER 10 μF 10 V 10% X7R 1206	10 μF	10%	1206	Murata Electronics North America	GCM31CR71A106KA64L	Yes
R1, R2	2	RES 0.0 Ω 1/10 W 0603 SMD	0 Ω	Jumper	603	Vishay/Dale	CRCW06030000Z0EA	Yes
R3, R4, R5, R6, RFB2U, RFB3U	6	RES 10.0 kΩ 1/10 W 1% 0603 SMD	10.0 kΩ	1%	603	Vishay/Dale	CRCW060310K0FKEA	Yes
R7	1	RES 0.0 Ω 1/4 W 1206 SMD	0 Ω	Jumper	1206	Vishay/Dale	CRCW12060000Z0EA	Yes
RCOMP1	1	RES 12.4 kΩ 1/10 W 1% 0603 SMD	12.4 kΩ	1%	603	Vishay/Dale	CRCW060312K4FKEA	Yes
RFB2L	1	RES 5.76 kΩ 1/10 W 1% 0603 SMD	5.76 kΩ	1%	603	Vishay/Dale	CRCW06035K76FKEA	Yes
RMIN1, RMIN2, RMIN3	3	RES 100 Ω 1/4 W 1% 1206 SMD	100 Ω	1%	1206	Vishay/Dale	CRCW1206100RFKEA	Yes
RSNB2, RSNB3	2	RES 10.0 Ω 1/10 W 1% 0603 SMD	10.0 Ω	1%	603	Vishay/Dale	CRCW060310R0FKEA	Yes
D1	1	DIODE SCHOTTKY 4.0 A 40 V SMB	40 V/4.0 A	N/A	SMB_DIODE	ON Semiconductor	NRVB440MFST1G	No
L0, L3	2	High Current Shielded Inductor 1.0 μH, 8.7 A SAT	1.0 μH	20%	XAL4020−102ME	Coilcraft	XAL4020−102ME	No
L1	1	High Current Shielded Inductor 4.7 μH, 4.5 A SAT	4.7 μH	20%	XAL4030−472ME	Coilcraft	XAL4030−472ME	No
L2	1	High Current Shielded Inductor 2.2 μH, 5.6 A SAT	2.2 μH	20%	XAL4020−222ME	Coilcraft	XAL4020−222ME	No

Table 4. BILL OF MATERIALS (continued)

Reference Designator(s)	Qty.	Description	Value	Tolerance	Footprint	Manufacturer	Manufacturer's Part Number	Substi-tution Allowed
EN, EN2, EN3, ERRB, GNDL, PGND1_1, PGND1_2, PGND2_1, PGND3_1, RST1B, RST2B, RST3B, STBYB, SW1, SW2, SW3, VIN2, VBAT, VOUT1_1, VOUT2_1, VOUT3_1	21	PIN INBOARD .042″ HOLE 1000/PKG	N/A	N/A	TP	Vector Electronics	K24C/M	Yes
GND0, GND1, GND2, GND3, VBAT, VOUT1, VOUT2, VOUT3	8	CONN JACK BANANA UNINS PANEL MOU	N/A	N/A	BANANA	Emerson Network Power Connectivity Johnson	108−0740−001	No
J1, J2, J3, J4	4	CONN HEADER 2POS .100 VERT GOLD	N/A	N/A	JMP	Molex Connector Corporation	22−28−4023	Yes
	4	CONN JUMPER SHORTING GOLD	N/A	N/A	JMP	Sullins Connector Solutions	SSC02SYAN	Yes
COMP1, DRV1, FB2, FB3, RMIN, TP1, TP2, TP3, VIND	9	CIRCUIT PIN PRNTD .020″D .425″L	Do Not Populate	N/A	SMALLTP	Mill−Max Manufacturing Corp.	3128−2−00−15−00−00−08−0	Yes
RDEPTH, RFB3L, RMOD, ROSC	4		Do Not Populate		603			Yes
U1	1	Automotive Battery−Connected Low IQ Multi−Output PMU	N/A	N/A	QFN32	ON Semiconductor	NCV97311MW50AR2G	No

NOTE: All devices are RoHS Compliant.

onsemi, onsemi, and other names, marks, and brands are registered and/or common law trademarks of Semiconductor Components Industries, LLC dba "**onsemi**" or its affiliates and/or subsidiaries in the United States and/or other countries. **onsemi** owns the rights to a number of patents, trademarks, copyrights, trade secrets, and other intellectual property. A listing of **onsemi**'s product/patent coverage may be accessed at www.onsemi.com/site/pdf/Patent−Marking.pdf. **onsemi** is an Equal Opportunity/Affirmative Action Employer. This literature is subject to all applicable copyright laws and is not for resale in any manner.

The evaluation board/kit (research and development board/kit) (hereinafter the "board") is not a finished product and is not available for sale to consumers. The board is only intended for research, development, demonstration and evaluation purposes and will only be used in laboratory/development areas by persons with an engineering/technical training and familiar with the risks associated with handling electrical/mechanical components, systems and subsystems. This person assumes full responsibility/liability for proper and safe handling. Any other use, resale or redistribution for any other purpose is strictly prohibited.

THE BOARD IS PROVIDED BY ONSEMI TO YOU "AS IS" AND WITHOUT ANY REPRESENTATIONS OR WARRANTIES WHATSOEVER. WITHOUT LIMITING THE FOREGOING, ONSEMI (AND ITS LICENSORS/SUPPLIERS) HEREBY DISCLAIMS ANY AND ALL REPRESENTATIONS AND WARRANTIES IN RELATION TO THE BOARD, ANY MODIFICATIONS, OR THIS AGREEMENT, WHETHER EXPRESS, IMPLIED, STATUTORY OR OTHERWISE, INCLUDING WITHOUT LIMITATION ANY AND ALL REPRESENTATIONS AND WARRANTIES OF MERCHANTABILITY, FITNESS FOR A PARTICULAR PURPOSE, TITLE, NON−INFRINGEMENT, AND THOSE ARISING FROM A COURSE OF DEALING, TRADE USAGE, TRADE CUSTOM OR TRADE PRACTICE.

onsemi reserves the right to make changes without further notice to any board.

You are responsible for determining whether the board will be suitable for your intended use or application or will achieve your intended results. Prior to using or distributing any systems that have been evaluated, designed or tested using the board, you agree to test and validate your design to confirm the functionality for your application. Any technical, applications or design information or advice, quality characterization, reliability data or other services provided by **onsemi** shall not constitute any representation or warranty by **onsemi**, and no additional obligations or liabilities shall arise from **onsemi** having provided such information or services.

onsemi products including the boards are not designed, intended, or authorized for use in life support systems, or any FDA Class 3 medical devices or medical devices with a similar or equivalent classification in a foreign jurisdiction, or any devices intended for implantation in the human body. You agree to indemnify, defend and hold harmless **onsemi**, its directors, officers, employees, representatives, agents, subsidiaries, affiliates, distributors, and assigns, against any and all liabilities, losses, costs, damages, judgments, and expenses, arising out of any claim, demand, investigation, lawsuit, regulatory action or cause of action arising out of or associated with any unauthorized use, even if such claim alleges that **onsemi** was negligent regarding the design or manufacture of any products and/or the board.

This evaluation board/kit does not fall within the scope of the European Union directives regarding electromagnetic compatibility, restricted substances (RoHS), recycling (WEEE), FCC, CE or UL, and may not meet the technical requirements of these or other related directives.

FCC WARNING − This evaluation board/kit is intended for use for engineering development, demonstration, or evaluation purposes only and is not considered by **onsemi** to be a finished end product fit for general consumer use. It may generate, use, or radiate radio frequency energy and has not been tested for compliance with the limits of computing devices pursuant to part 15 of FCC rules, which are designed to provide reasonable protection against radio frequency interference. Operation of this equipment may cause interference with radio communications, in which case the user shall be responsible, at its expense, to take whatever measures may be required to correct this interference.

onsemi does not convey any license under its patent rights nor the rights of others.

LIMITATIONS OF LIABILITY: **onsemi** shall not be liable for any special, consequential, incidental, indirect or punitive damages, including, but not limited to the costs of requalification, delay, loss of profits or goodwill, arising out of or in connection with the board, even if **onsemi** is advised of the possibility of such damages. In no event shall **onsemi**'s aggregate liability from any obligation arising out of or in connection with the board, under any theory of liability, exceed the purchase price paid for the board, if any.

The board is provided to you subject to the license and other terms per **onsemi**'s standard terms and conditions of sale. For more information and documentation, please visit www.onsemi.com.

ADDITIONAL INFORMATION

TECHNICAL PUBLICATIONS:
Technical Library: www.onsemi.com/design/resources/technical−documentation
onsemi Website: www.onsemi.com

ONLINE SUPPORT: www.onsemi.com/support
For additional information, please contact your local Sales Representative at www.onsemi.com/support/sales