MT9M114EBLSTCZH3-GEVB

MT9M114 Evaluation Board User's Manual

ON Semiconductor®

www.onsemi.com

EVAL BOARD USER'S MANUAL

Figure 1. MT9M114 Evaluation Board

Evaluation Board Overview

The evaluation boards are designed to demonstrate the features of ON Semiconductor's image sensors products. This headboard is intended to plug directly into the Demo3 system. Test points and jumpers on the board provide access to the clock, I/Os, and other miscellaneous signals.

Features

- Clock Input
  - Default – 24 MHz Crystal Oscillator
  - Optional Demo3 Controlled MClk
- Two-wire Serial Interface
- Parallel Interface
- HiSPi (High Speed Serial Pixel) Interface
- ROHS Compliant

Block Diagram

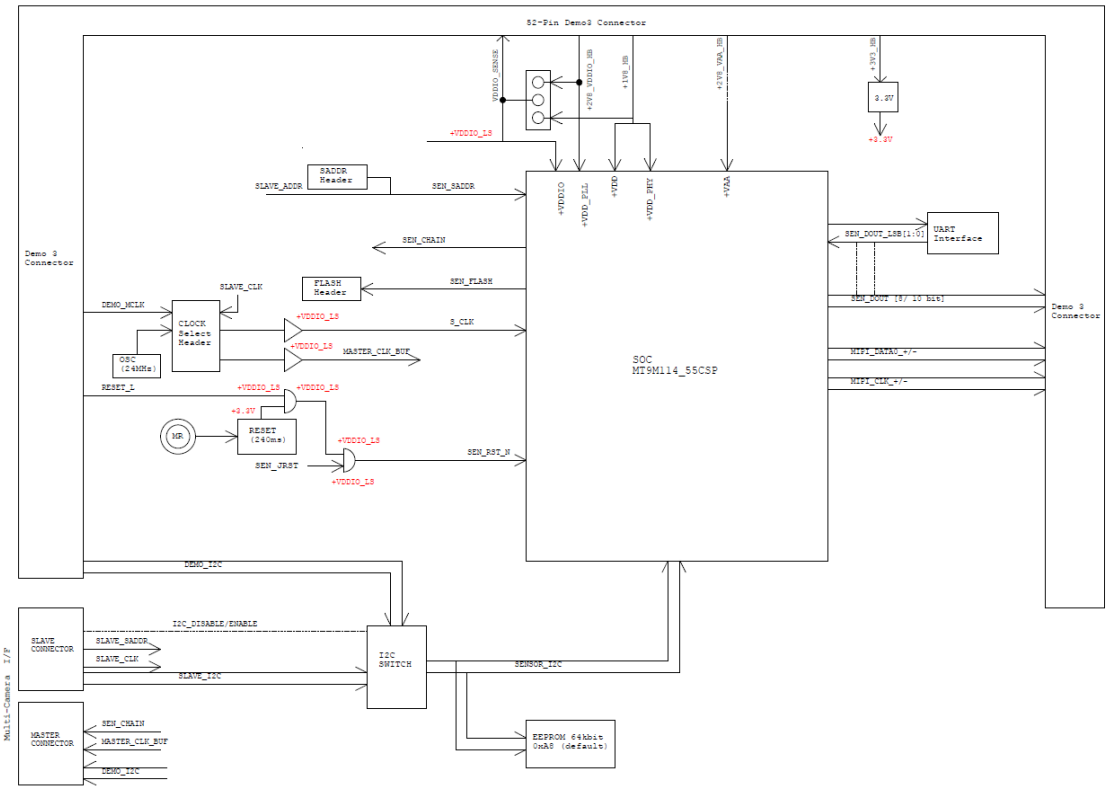

Figure 2. Block Diagram of MT9M114 Evaluation Board

Top View

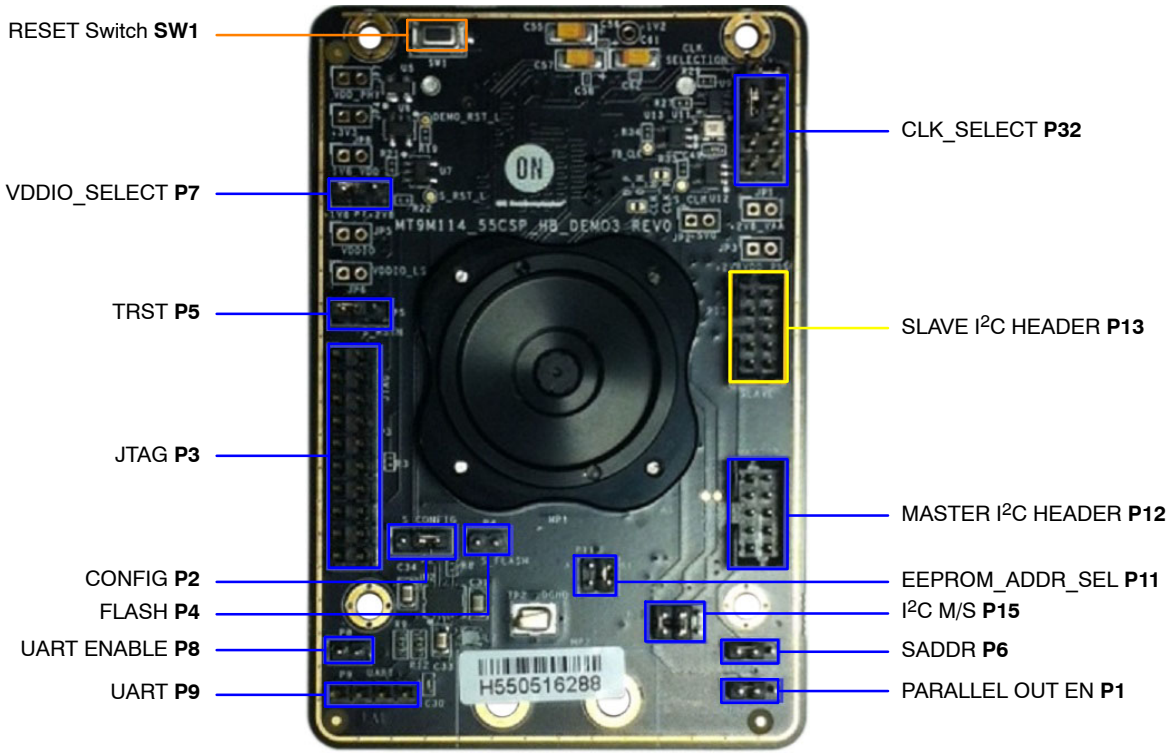

Figure 3. Top View of the Board − Default Jumpers

Bottom View

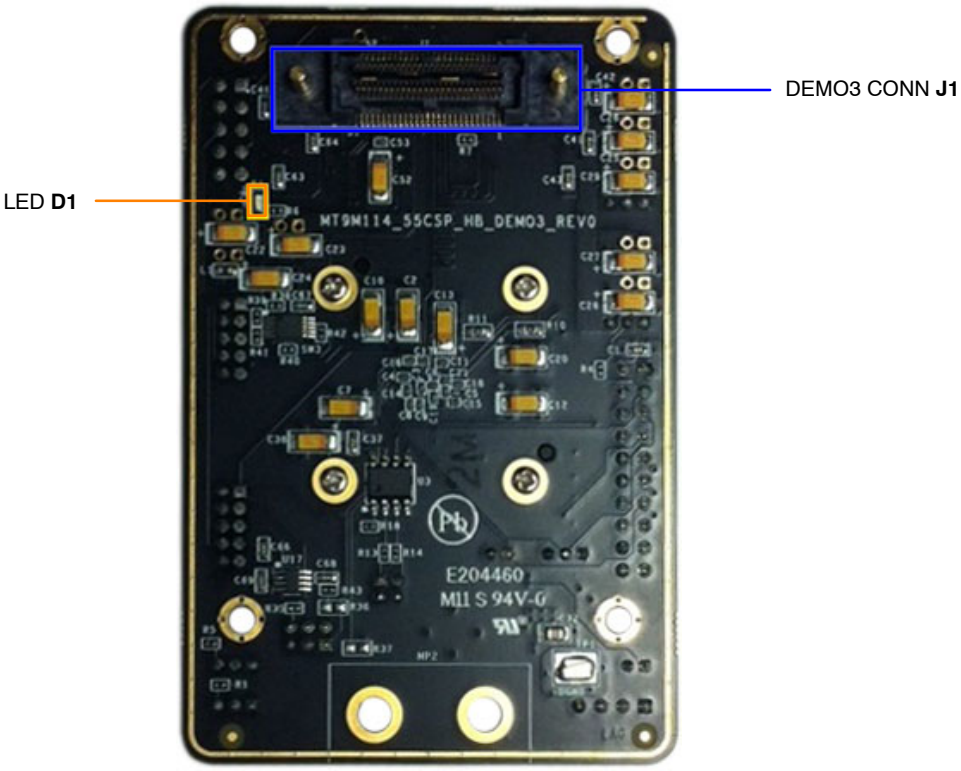

Figure 4. Bottom View of the Board − Connector

Jumper Pin Locations

The jumpers on headboards start with Pin 1 on the leftmost side of the pin. Grouped jumpers increase in pin size with each jumper added. The ‘L’ shape denotes pin 1.

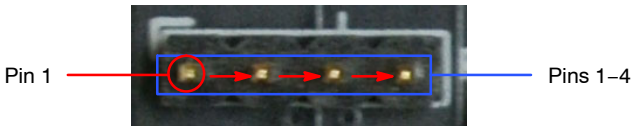

Figure 5. Pin Locations for a Single Jumper. Pin 1 is Located at the Leftmost Side and Increases as it Moves to the Right (Except for P11)

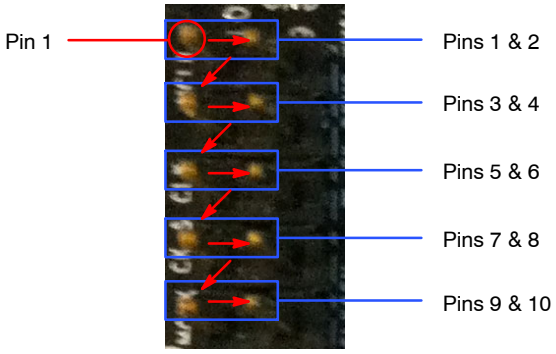

Figure 6. Pin Locations and Assignments of Grouped Jumpers. Pin 1 is Located at the Top-Left Corner and Increases in a Zigzag Fashion Shown in the Picture (P11 and P15 has different orientation

Jumper/Header Functions & Default Positions

Table 1. JUMPERS AND HEADERS

Jumper/Header No.	Jumper/Header Name	Pins	Description
P1	OE_L	1−2 (Default)	Enable Parallel Interface
		2−3	Enable MIPI Interface
P2	CONFIG	2−3 (Default)	Set to Normal Mode
		1−2	Suspend State
P3	JTAG Probe	3 (SEN_TRSTN)	JTAG_TRSTN
		5 (SEN_CONFIG)	JTAG_TDI
		7 (SEN_CHAIN)	JTAG_SMS
		9 (SEN_TCK)	JTAG_TCK
		13 (SEN_FLASH)	JTAG_TDO
		15 (SEN_JRST)	JTAG_RST
P4	FLASH	1−2	For Connection to External Flash
P5	TRST	1−2 (Default)	Set to Normal Mode
		2−3	Set to Test Mode
P6	SADDR	1−2 (Default)	Slave Address: 0x90
		2−3	Slave Address: 0xBA
		Open	Multi-camera Slave Mode
P7	+VDDIO	1−2 (Default)	1.8 V Operation of Sensor
		2−3	2.8 V Operation of Sensor

Table 1. JUMPERS AND HEADERS (continued)

Jumper/Header No.	Jumper/Header Name	Pins	Description
P8	UART	Open (Default)	UART Shutdown (Tristate)
		Close	UART Active
P9	UART Connector	1	GND
		2	UART_TX
		3	UART_RX
		4	VCC
P11	EEPROM	1−2 (Default)	Active Low (A1)
		3−4 (Default)	Active High (A2)
P12	Master connector (Multi−camera)	1	SEN_CHAIN
		3	MASTER_SCK
		5	MASTER _SDAT
		9	CLK_MCLK_BUF
P13	Slave connector (Multi−camera)	1	SEN_SADDR
		3	SLAVE_SCL
		5	SLAVE_SDA
		7	M_I2C_DISABLE
		9	CK_S_CLK
P15	I^2C connector	1−2 & 3−4 (Default)	Master and Sensor I^2C Connected
P32	CLOCK SELECTION	3−5 & 1−2 (Default)	Multi-camera, Master Mode; On-board Oscillator
		7−5 & 9−10	Multi-camera, Master Mode; DEMO3 Clock
		6−5 & 4−2	Multi-camera, Slave Mode; Clock from Master Sensor Unit
		3−5	Single Camera; On-board Oscillator
		5−7	Single Camera; External Clock from Demo3
		5−6	Single Camera; External Clock from Demo3

Interfacing to ON Semiconductor Demo3 Baseboard

The ON Semiconductor Demo3 headboard has a similar 52-pin connector which mates P5 of the Demo3 baseboard. The four mounting holes secure the baseboard and the headboard with spacers and screws.

Shorted Jumpers for Power Measurement

Different supplies to the evaluation board are provided by trace shorted jumper, for any voltage and power measurements. To conduct current measurement on a given power rail, cut the trace between the two pins of their respective JP, and insert an ammeter prior to powering up the system. The figure below shows where the trace to cut is located.

Table 2. SHORTENED JUMPERS FOR POWER MEASUREMENT

Jumper	Voltage
JP1 (VAA)	2.8 V
JP2 (From Demo3)	5.0 V
JP3 (VDD−PLL)	2.8 V
JP4 (Peripheral 3.3V)	3.3 V
JP5 (VDDIO)	1.8/2.8 V
JP6 (VDDIO_LS)	1.8/2.8 V
JP7 (VDD−PHY)	1.8 V
JP8 (VDD)	1.8 V

Figure 7. Top and Bottom View of Shorted Jumper. The Bottom View Shows the Trace Location to Cut for Current Measurement

onsemi, onsemi, and other names, marks, and brands are registered and/or common law trademarks of Semiconductor Components Industries, LLC dba "**onsemi**" or its affiliates and/or subsidiaries in the United States and/or other countries. **onsemi** owns the rights to a number of patents, trademarks, copyrights, trade secrets, and other intellectual property. A listing of **onsemi**'s product/patent coverage may be accessed at www.onsemi.com/site/pdf/Patent−Marking.pdf. **onsemi** is an Equal Opportunity/Affirmative Action Employer. This literature is subject to all applicable copyright laws and is not for resale in any manner.

The evaluation board/kit (research and development board/kit) (hereinafter the "board") is not a finished product and is not available for sale to consumers. The board is only intended for research, development, demonstration and evaluation purposes and will only be used in laboratory/development areas by persons with an engineering/technical training and familiar with the risks associated with handling electrical/mechanical components, systems and subsystems. This person assumes full responsibility/liability for proper and safe handling. Any other use, resale or redistribution for any other purpose is strictly prohibited.

THE BOARD IS PROVIDED BY ONSEMI TO YOU "AS IS" AND WITHOUT ANY REPRESENTATIONS OR WARRANTIES WHATSOEVER. WITHOUT LIMITING THE FOREGOING, ONSEMI (AND ITS LICENSORS/SUPPLIERS) HEREBY DISCLAIMS ANY AND ALL REPRESENTATIONS AND WARRANTIES IN RELATION TO THE BOARD, ANY MODIFICATIONS, OR THIS AGREEMENT, WHETHER EXPRESS, IMPLIED, STATUTORY OR OTHERWISE, INCLUDING WITHOUT LIMITATION ANY AND ALL REPRESENTATIONS AND WARRANTIES OF MERCHANTABILITY, FITNESS FOR A PARTICULAR PURPOSE, TITLE, NON−INFRINGEMENT, AND THOSE ARISING FROM A COURSE OF DEALING, TRADE USAGE, TRADE CUSTOM OR TRADE PRACTICE.

onsemi reserves the right to make changes without further notice to any board.

You are responsible for determining whether the board will be suitable for your intended use or application or will achieve your intended results. Prior to using or distributing any systems that have been evaluated, designed or tested using the board, you agree to test and validate your design to confirm the functionality for your application. Any technical, applications or design information or advice, quality characterization, reliability data or other services provided by **onsemi** shall not constitute any representation or warranty by **onsemi**, and no additional obligations or liabilities shall arise from **onsemi** having provided such information or services.

onsemi products including the boards are not designed, intended, or authorized for use in life support systems, or any FDA Class 3 medical devices or medical devices with a similar or equivalent classification in a foreign jurisdiction, or any devices intended for implantation in the human body. You agree to indemnify, defend and hold harmless **onsemi**, its directors, officers, employees, representatives, agents, subsidiaries, affiliates, distributors, and assigns, against any and all liabilities, losses, costs, damages, judgments, and expenses, arising out of any claim, demand, investigation, lawsuit, regulatory action or cause of action arising out of or associated with any unauthorized use, even if such claim alleges that **onsemi** was negligent regarding the design or manufacture of any products and/or the board.

This evaluation board/kit does not fall within the scope of the European Union directives regarding electromagnetic compatibility, restricted substances (RoHS), recycling (WEEE), FCC, CE or UL, and may not meet the technical requirements of these or other related directives.

FCC WARNING − This evaluation board/kit is intended for use for engineering development, demonstration, or evaluation purposes only and is not considered by **onsemi** to be a finished end product fit for general consumer use. It may generate, use, or radiate radio frequency energy and has not been tested for compliance with the limits of computing devices pursuant to part 15 of FCC rules, which are designed to provide reasonable protection against radio frequency interference. Operation of this equipment may cause interference with radio communications, in which case the user shall be responsible, at its expense, to take whatever measures may be required to correct this interference.

onsemi does not convey any license under its patent rights nor the rights of others.

LIMITATIONS OF LIABILITY: **onsemi** shall not be liable for any special, consequential, incidental, indirect or punitive damages, including, but not limited to the costs of requalification, delay, loss of profits or goodwill, arising out of or in connection with the board, even if **onsemi** is advised of the possibility of such damages. In no event shall **onsemi**'s aggregate liability from any obligation arising out of or in connection with the board, under any theory of liability, exceed the purchase price paid for the board, if any.

The board is provided to you subject to the license and other terms per **onsemi**'s standard terms and conditions of sale. For more information and documentation, please visit www.onsemi.com.

ADDITIONAL INFORMATION

TECHNICAL PUBLICATIONS:
Technical Library: www.onsemi.com/design/resources/technical−documentation
onsemi Website: www.onsemi.com

ONLINE SUPPORT: www.onsemi.com/support
For additional information, please contact your local Sales Representative at www.onsemi.com/support/sales