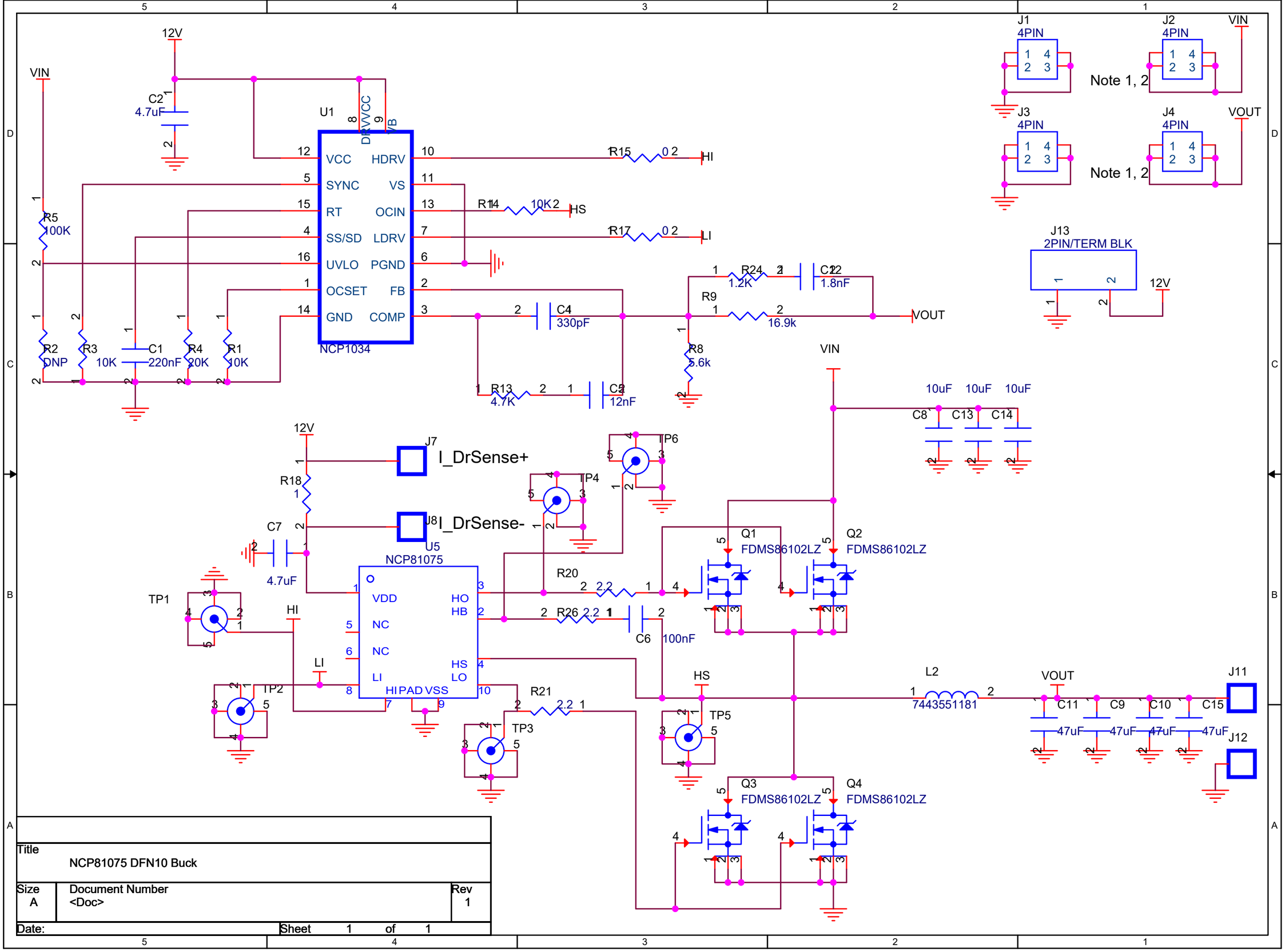

Title	NCP81075 DFN10 Buck	
Size A	Document Number <Doc>	Rev 1
Date:	Sheet 1 of 1	