EEPROM Serial 64-Kb I^{2}C Automotive Grade 1 in Wettable Flank UDFN8 Package

NV24C64MUW

ON Semiconductor®

www.onsemi.com

UDFN8
MUW3 SUFFIX
CASE 517DH

C6W	= Specific Device Code
A	= Assembly Location
WL	= Wafer Lot
Y	= Year
W	= Work Week
▪	= Pb−Free Package

PIN CONFIGURATION

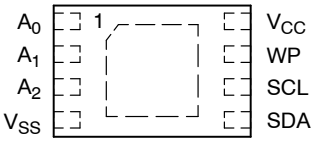

(Top View)

For the location of Pin 1, please consult the corresponding package drawing.

PIN FUNCTION

Pin Name	Function
A_0, A_1, A_2	Device Address Inputs
SDA	Serial Data Input/Output
SCL	Serial Clock Input
WP	Write Protect Input
V_{CC}	Power Supply
V_{SS}	Ground

ORDERING INFORMATION

See detailed ordering, marking and shipping information on page 8 of this data sheet.

Description

The NV24C64MUW is a EEPROM Serial 64−Kb I^{2}C Automotive Grade 1 device, organized internally as 256 pages of 32 bytes each. This device supports the Standard (100 kHz), Fast (400 kHz) and Fast−Plus (1 MHz) I^{2}C protocol.

Data is written by providing a starting address, then loading 1 to 32 contiguous bytes into a Page Write Buffer, and then writing all data to non−volatile memory in one internal write cycle. Data is read by providing a starting address and then shifting out data serially while automatically incrementing the internal address count.

External address pins make it possible to address up to eight NV24C64MUW devices on the same bus.

Features

- Automotive AEC−Q100 Grade 1 (−40°C to +125°C) Qualified
- Supports Standard, Fast and Fast−Plus I^{2}C Protocol
- 1.8 V to 5.5 V Supply Voltage Range
- 32−Byte Page Write Buffer
- Fast Write Time (4 ms max)
- Hardware Write Protection for Entire Memory
- Schmitt Triggers and Noise Suppression Filters on I^{2}C Bus Inputs (SCL and SDA)
- Low Power CMOS Technology
- 1,000,000 Program/Erase Cycles
- 100 Year Data Retention
- Industrial and Automotive Grade 1 Temperature Range
- Wettable Flank UDFN 8−pad Packages
- These Devices are Pb−Free, Halogen Free/BFR Free, and RoHS Compliant

© Semiconductor Components Industries, LLC, 2017

July, 2020 − Rev. 3

Publication Order Number:
NV24C64MUW/D

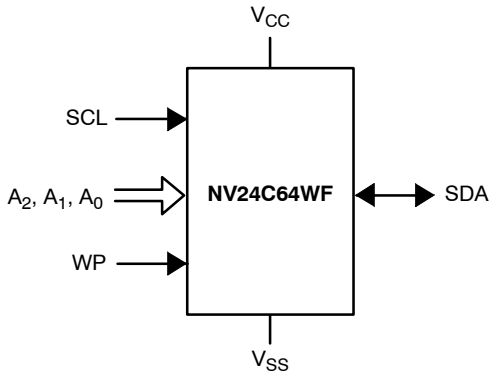

US8

Figure 1. Functional Symbol

Table 1. ABSOLUTE MAXIMUM RATINGS

Parameters	Ratings	Unit
Storage Temperature	–65 to +150	°C
Voltage on Any Pin with Respect to Ground (Note 1)	–0.5 to +6.5	V

Stresses exceeding those listed in the Maximum Ratings table may damage the device. If any of these limits are exceeded, device functionality should not be assumed, damage may occur and reliability may be affected.

1. The DC input voltage on any pin should not be lower than –0.5 V or higher than V_{CC} + 0.5 V. During transitions, the voltage on any pin may undershoot to no less than –1.5 V or overshoot to no more than V_{CC} + 1.5 V, for periods of less than 20 ns.

Table 2. RELIABILITY CHARACTERISTICS

Symbol	Parameter	Max	Unit
N_{END} (Note 2)	Endurance	1,000,000	Write Cycles (Note 3)
T_{DR} (Note 2)	Data Retention	100	Years

2. T_A = 25°C
3. A Write Cycle refers to writing a Byte or a Page.

Table 3. DC OPERATING CHARACTERISTICS
(V_{CC} = 1.8 V to 5.5 V, T_A = –40°C to +125°C, unless otherwise specified.)

Symbol	Parameter	Test Conditions	Min	Max	Unit
I_{CCR}	Read Current	Read, f_{SCL} = 1 MHz		1	mA
I_{CCW}	Write Current	Write, f_{SCL} = 1 MHz		1	mA
I_{SB}	Standby Current	All I/O Pins at GND or V_{CC}		2	μA
I_L	I/O Pin Leakage	Pin at GND or V_{CC}		2	μA
V_{IL}	Input Low Voltage	SCL, SDA	–0.5	V_{CC} x 0.3	V
V_{IH}	Input High Voltage	SCL, SDA	V_{CC} x 0.7	V_{CC} + 0.5	V
V_{ILA}	Input Low Voltage	A2, A1, A0 and WP	–0.5	V_{CC} x 0.3	V
V_{IHA}	Input High Voltage	A2, A1, A0 and WP	V_{CC} x 0.8	V_{CC} + 0.5	V
V_{OL1}	Output Low Voltage	$V_{CC} \geq$ 2.5 V, I_{OL} = 3.0 mA		0.4	V
V_{OL2}	Output Low Voltage	V_{CC} < 2.5 V, I_{OL} = 1.0 mA		0.2	V

Product parametric performance is indicated in the Electrical Characteristics for the listed test conditions, unless otherwise noted. Product performance may not be indicated by the Electrical Characteristics if operated under different conditions.

Table 4. PIN IMPEDANCE CHARACTERISTICS
(V_{CC} = 1.7 V / 1.6 V* to 5.5 V, T_A = −40°C to +85°C and V_{CC} = 1.8 V to 5.5 V, T_A = −40°C to +125°C, unless otherwise specified.)

Symbol	Parameter	Conditions	Min	Max	Unit
C_{IN} (Note 4)	SDA I/O Pin Capacitance	V_{IN} = 0 V		8	pF
C_{IN} (Note 4)	Input Capacitance (other pins)	V_{IN} = 0 V		6	pF
R_{PD} (Note 5)	WP, A0, A1 or A2 On−Chip Pull−Down Resistor	$V_{IN} < V_{IHA}$	50		kΩ
I_{PD} (Note 5)	WP, A0, A1 or A2 On−Chip Pull−Down Current	$V_{IN} > V_{IHA}$		2	μA

4. These parameters are tested initially and after a design or process change that affects the parameter according to appropriate AEC−Q100 and JEDEC test methods.
5. For improved noise immunity (and to allow for floating input pins), the WP, A0, A1 & A2 inputs are pulled−down to GND by relatively strong on−chip resistors. When attempting to drive these inputs High, the external drivers must be able to supply sufficient current, until the input level at the pin exceeds V_{IHA}. Once the input level at the pin exceeds V_{IHA}, the resistive pull−down (R_{PD}) converts to a constant current pull−down (I_{PD}).

Table 5. AC CHARACTERISTICS
(V_{CC} = 1.8 V to 5.5 V, T_A = −40°C to +125°C unless otherwise noted.) (Note 6)

Symbol	Parameter	Standard		Fast		Fast−Plus		Unit
		Min	Max	Min	Max	Min	Max	
F_{SCL}	Clock Frequency		100		400		1,000	kHz
$t_{HD:STA}$	START Condition Hold Time	4		0.6		0.25		μs
t_{LOW}	Low Period of SCL Clock	4.7		1.3		0.45		μs
t_{HIGH}	High Period of SCL Clock	4		0.6		0.40		μs
$t_{SU:STA}$	START Condition Setup Time	4.7		0.6		0.25		μs
$t_{HD:DAT}$	Data In Hold Time	0		0		0		μs
$t_{SU:DAT}$	Data In Setup Time	250		100		50		ns
t_R (Note 7)	SDA and SCL Rise Time		1,000		300		100	ns
t_F (Note 7)	SDA and SCL Fall Time		300		300		100	ns
$t_{SU:STO}$	STOP Condition Setup Time	4		0.6		0.25		μs
t_{BUF}	Bus Free Time Between STOP and START	4.7		1.3		0.5		μs
t_{AA}	SCL Low to Data Out Valid		3.5		0.9		0.40	μs
t_{DH} (Note 7)	Data Out Hold Time	100		100		50		ns
T_i (Note 7)	Noise Pulse Filtered at SCL and SDA Inputs		50		50		50	ns
$t_{SU:WP}$	WP Setup Time	0		0		0		μs
$t_{HD:WP}$	WP Hold Time	2.5		2.5		1		μs
t_{WR}	Write Cycle Time		4		4		4	ms
t_{PU} (Notes 7, 8)	Power-up to Ready Mode		0.35		0.35		0.35	ms

*$V_{CC(min)}$ = 1.6 V for Read operations, T_A = −20°C to +85°C
6. Test conditions according to “A.C. Test Conditions” table.
7. Tested initially and after a design or process change that affects this parameter.
8. t_{PU} is the delay between the time V_{CC} is stable and the device is ready to accept commands.

Table 6. AC TEST CONDITIONS

Input Levels	0.2 x V_{CC} to 0.8 x V_{CC} for $V_{CC} \geq 2.2$ V; 0.15 x V_{CC} to 0.85 x V_{CC} for $V_{CC} < 2.2$ V
Input Rise and Fall Times	≤ 50 ns
Input Reference Levels	0.3 x V_{CC}, 0.7 x V_{CC}
Output Reference Levels	0.3 x V_{CC}, 0.7 x V_{CC}
Output Load	Current Source: I_{OL} = 6 mA ($V_{CC} \geq 2.5$ V); I_{OL} = 2 mA ($V_{CC} < 2.5$ V); C_L = 100 pF

Power-On Reset (POR)

Each NV24C64MUW incorporates Power-On Reset (POR) circuitry which protects the internal logic against powering up in the wrong state. The device will power up into Standby mode after V_{CC} exceeds the POR trigger level and will power down into Reset mode when V_{CC} drops below the POR trigger level. This bi-directional POR behavior protects the device against 'brown-out' failure following a temporary loss of power.

Pin Description

SCL: The Serial Clock input pin accepts the clock signal generated by the Master.

SDA: The Serial Data I/O pin accepts input data and delivers output data. In transmit mode, this pin is open drain. Data is acquired on the positive edge, and is delivered on the negative edge of SCL.

A_0, A_1 and A_2: The Address inputs set the device address that must be matched by the corresponding Slave address bits. The Address inputs are hard-wired HIGH or LOW allowing for up to eight devices to be used (cascaded) on the same bus. When left floating, these inputs are pulled LOW internally.

WP: When pulled HIGH, the Write Protect input pin inhibits all write operations. When left floating, this pin is pulled LOW internally.

Functional Description

The NV24C64MUW supports the Inter-Integrated Circuit (I^2C) Bus protocol. The protocol relies on the use of a Master device, which provides the clock and directs bus traffic, and Slave devices which execute requests. The NV24C64MUW operates as a Slave device. Both Master and Slave can transmit or receive, but only the Master can assign those roles.

I^2C Bus Protocol

The 2-wire I^2C bus consists of two lines, SCL and SDA, connected to the V_{CC} supply via pull-up resistors. The Master provides the clock to the SCL line, and either the Master or the Slaves drive the SDA line. A '0' is transmitted by pulling a line LOW and a '1' by letting it stay HIGH. Data transfer may be initiated only when the bus is not busy (see A.C. Characteristics). During data transfer, SDA must remain stable while SCL is HIGH.

START/STOP Condition

An SDA transition while SCL is HIGH creates a START or STOP condition (Figure 2). The START consists of a HIGH to LOW SDA transition, while SCL is HIGH. Absent the START, a Slave will not respond to the Master. The STOP completes all commands, and consists of a LOW to HIGH SDA transition, while SCL is HIGH.

Device Addressing

The Master addresses a Slave by creating a START condition and then broadcasting an 8-bit Slave address. For the NV24C64MUW, the first four bits of the Slave address are set to 1010 (Ah); the next three bits, A_2, A_1 and A_0, must match the logic state of the similarly named input pins. The $R/\overline{W}$ bit tells the Slave whether the Master intends to read (1) or write (0) data (Figure 3). The device in WLCSP with 4 bumps responds only to address combination A2A1A0 = 000.

Acknowledge

During the 9th clock cycle following every byte sent to the bus, the transmitter releases the SDA line, allowing the receiver to respond. The receiver then either acknowledges (ACK) by pulling SDA LOW, or does not acknowledge (NoACK) by letting SDA stay HIGH (Figure 4). Bus timing is illustrated in Figure 5.

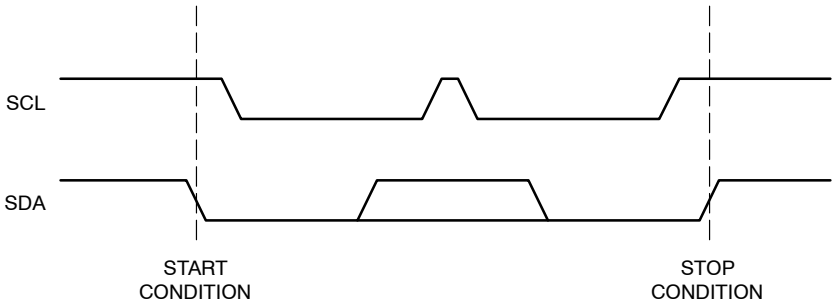

Figure 2. Start/Stop Timing

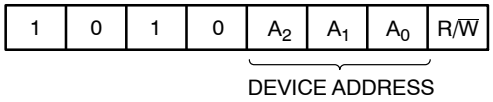

Figure 3. Slave Address Bits

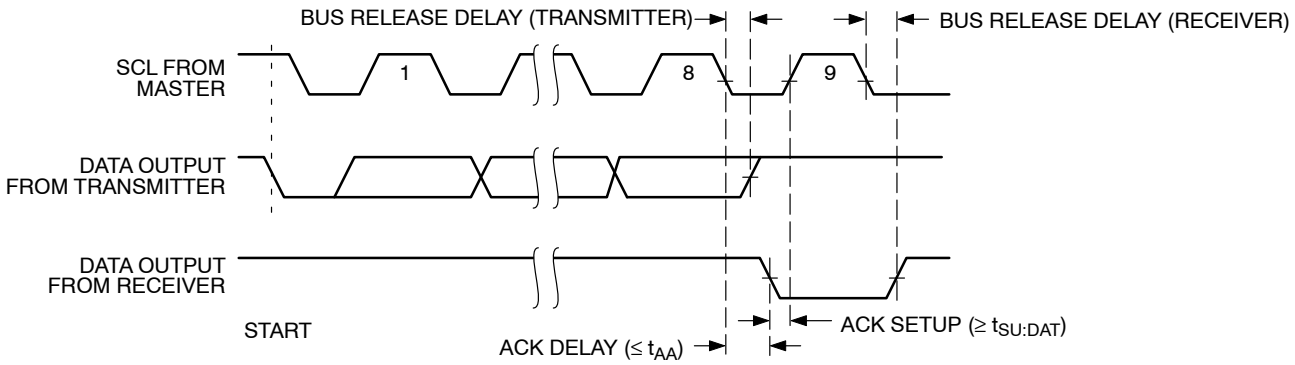

Figure 4. Acknowledge Timing

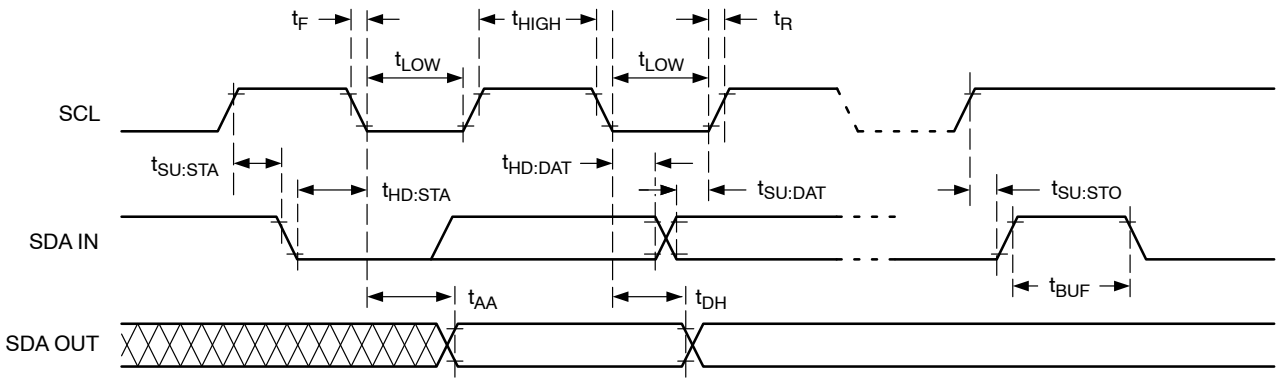

Figure 5. Bus Timing

WRITE OPERATIONS

Byte Write

To write data to memory, the Master creates a START condition on the bus and then broadcasts a Slave address with the R/$\overline{W}$ bit set to ‘0’. The Master then sends two address bytes and a data byte and concludes the session by creating a STOP condition on the bus. The Slave responds with ACK after every byte sent by the Master (Figure 6). The STOP starts the internal Write cycle, and while this operation is in progress (t_{WR}), the SDA output is tri-stated and the Slave does not acknowledge the Master (Figure 7).

Page Write

The Byte Write operation can be expanded to Page Write, by sending more than one data byte to the Slave before issuing the STOP condition (Figure 8). Up to 32 distinct data bytes can be loaded into the internal Page Write Buffer starting at the address provided by the Master. The page address is latched, and as long as the Master keeps sending data, the internal byte address is incremented up to the end of page, where it then wraps around (within the page). New data can therefore replace data loaded earlier. Following the STOP, data loaded during the Page Write session will be written to memory in a single internal Write cycle (t_{WR}).

Acknowledge Polling

As soon (and as long) as internal Write is in progress, the Slave will not acknowledge the Master. This feature enables the Master to immediately follow-up with a new Read or Write request, rather than wait for the maximum specified Write time (t_{WR}) to elapse. Upon receiving a NoACK response from the Slave, the Master simply repeats the request until the Slave responds with ACK.

Hardware Write Protection

With the WP pin held HIGH, the entire memory is protected against Write operations. If the WP pin is left floating or is grounded, it has no impact on the Write operation. The state of the WP pin is strobed on the last falling edge of SCL immediately preceding the 1st data byte (Figure 9). If the WP pin is HIGH during the strobe interval, the Slave will not acknowledge the data byte and the Write request will be rejected.

Delivery State

The NV24C64MUW is shipped erased, i.e., all bytes are FFh.

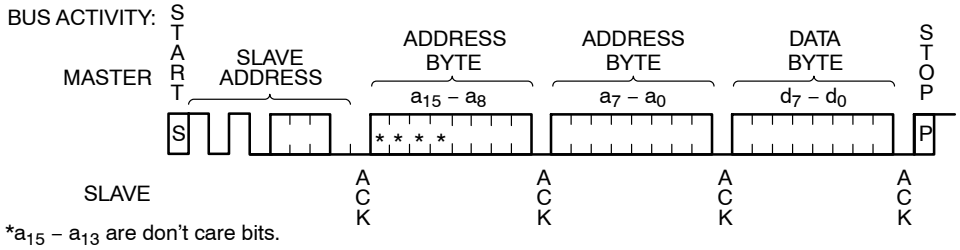

Figure 6. Byte Write Sequence

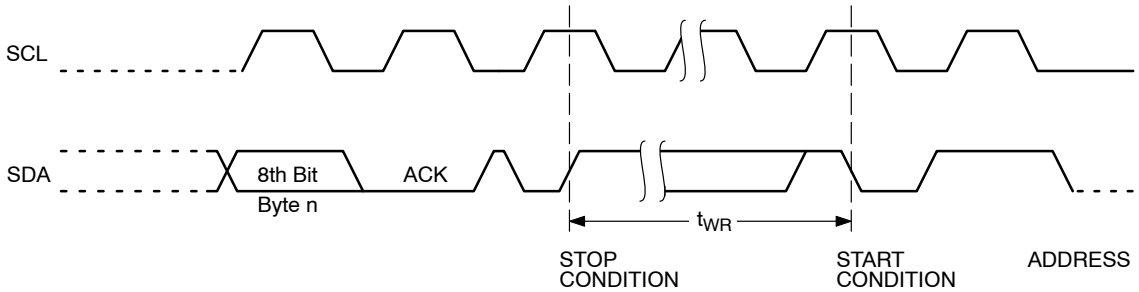

Figure 7. Write Cycle Timing

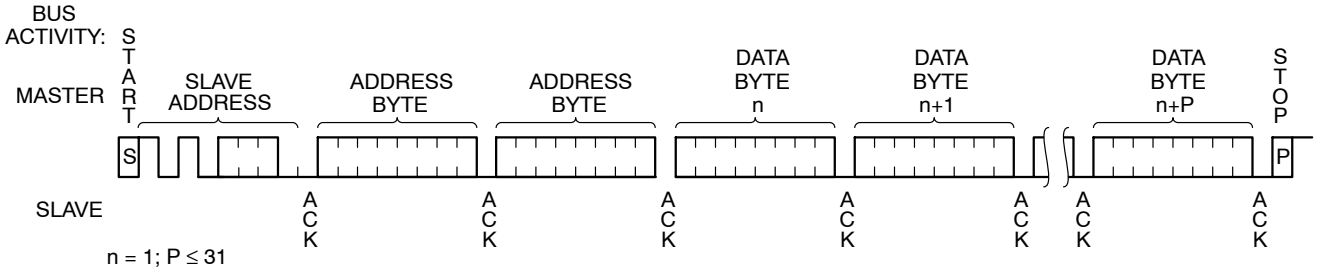

Figure 8. Page Write Sequence

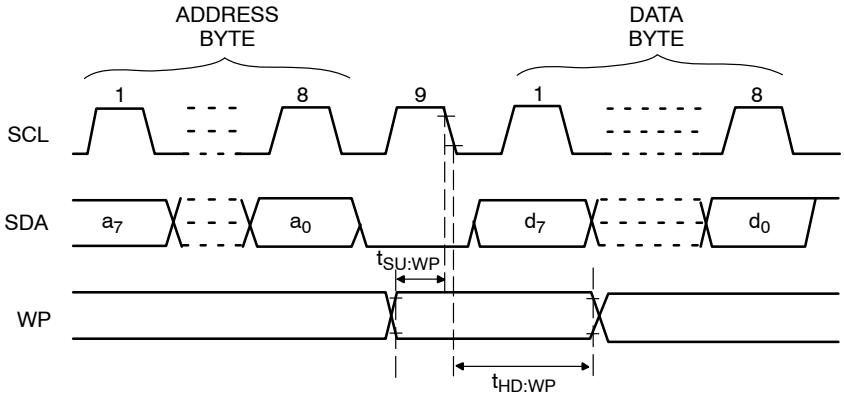

Figure 9. WP Timing

READ OPERATIONS

Immediate Read

To read data from memory, the Master creates a START condition on the bus and then broadcasts a Slave address with the R/$\overline{W}$ bit set to '1'. The Slave responds with ACK and starts shifting out data residing at the current address. After receiving the data, the Master responds with NoACK and terminates the session by creating a STOP condition on the bus (Figure 10). The Slave then returns to Standby mode.

Selective Read

To read data residing at a specific address, the selected address must first be loaded into the internal address register. This is done by starting a Byte Write sequence, whereby the Master creates a START condition, then broadcasts a Slave address with the R/$\overline{W}$ bit set to '0' and then sends two address bytes to the Slave. Rather than completing the Byte Write sequence by sending data, the Master then creates a START condition and broadcasts a Slave address with the R/$\overline{W}$ bit set to '1'. The Slave responds with ACK after every byte sent by the Master and then sends out data residing at the selected address. After receiving the data, the Master responds with NoACK and then terminates the session by creating a STOP condition on the bus (Figure 11).

Sequential Read

If, after receiving data sent by the Slave, the Master responds with ACK, then the Slave will continue transmitting until the Master responds with NoACK followed by STOP (Figure 12). During Sequential Read the internal byte address is automatically incremented up to the end of memory, where it then wraps around to the beginning of memory.

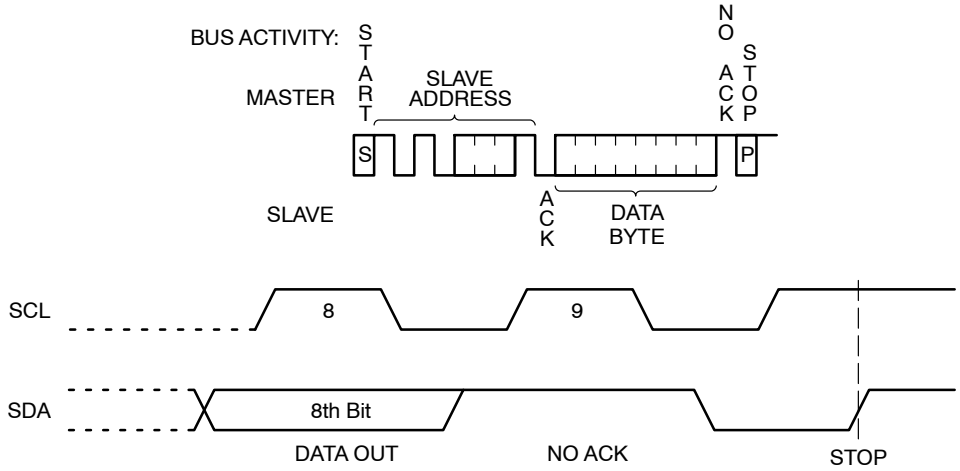

Figure 10. Immediate Read Sequence and Timing

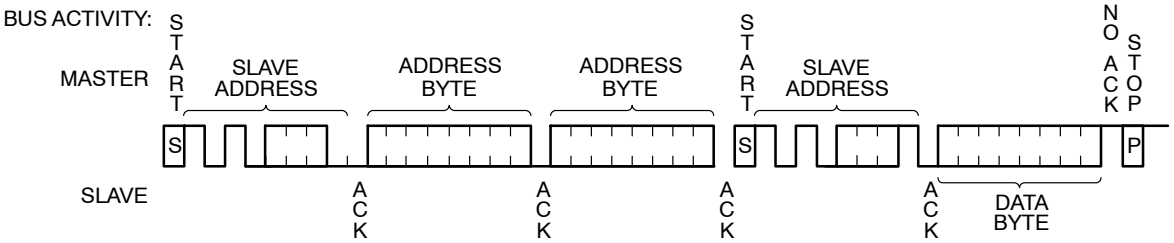

Figure 11. Selective Read Sequence

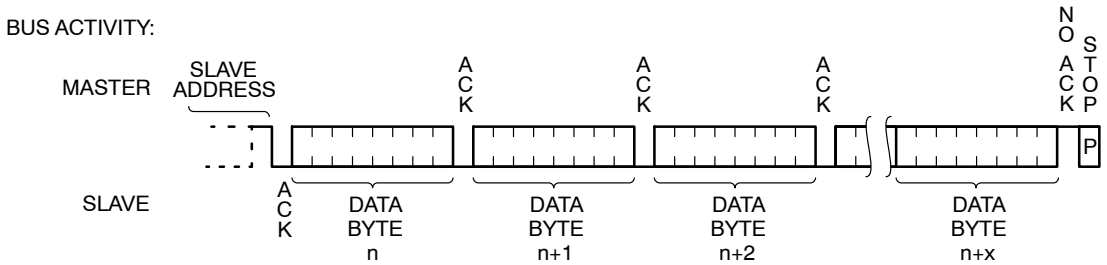

Figure 12. Sequential Read Sequence

ORDERING INFORMATION

Device Order Number	Specific Device Marking	Temperature Range	Package Type	Shipping†
NV24C64MUW3VTBG	C6W	V = Automotive Grade 1 (−40°C to +125°C)	MUW3 = UDFN8 (Wettable Flank)	T = Tape & Reel, 3000 / Tape & Reel

†For information on tape and reel specifications, including part orientation and tape sizes, please refer to our Tape and Reel Packaging Specifications Brochure, BRD8011/D.

9. All packages are RoHS−compliant (Pb−Free, Halogen−free).
10. For additional package and temperature options, please contact your nearest ON Semiconductor Sales office.

ON Semiconductor is licensed by the Philips Corporation to carry the I^2C bus protocol.

UDFN8 2x3, 0.5P
CASE 517DH
ISSUE A

SCALE 2:1

DATE 10 DEC 2020

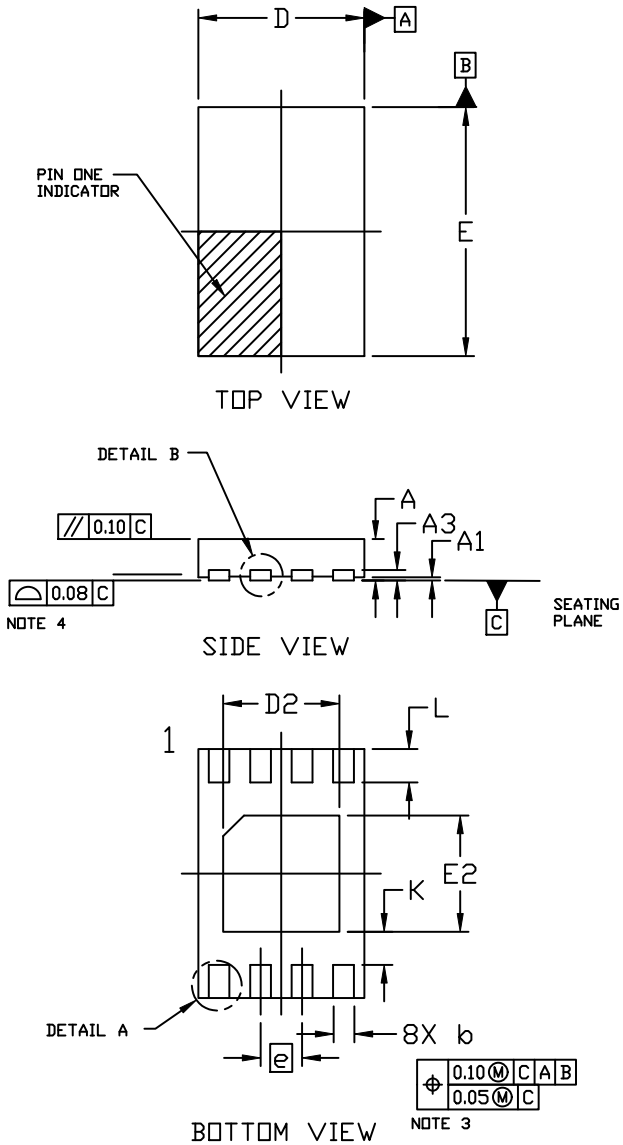

NOTES:
1. DIMENSIONING AND TOLERANCING PER ASME Y14.5M,1994.
2. CONTROLLING DIMENSION: MILLIMETERS
3. DIMENSION b APPLIES TO PLATED TERMINAL AND IS MEASURED BETWEEN 0.15 AND 0.25MM FROM THE TERMINAL TIP.
4. COPLANARITY APPLIES TO THE EXPOSED PAD AS WELL AS THE TERMINALS.

DIM	MILLIMETERS		
	MIN.	NOM.	MAX.
A	0.45	0.50	0.55
A1	0.00	---	0.05
A3	0.13 REF		
b	0.20	0.25	0.30
D	1.90	2.00	2.10
D2	1.30	1.40	1.50
E	2.90	3.00	3.10
E2	1.30	1.40	1.50
e	0.50 BSC		
K	0.40 REF		
L	0.30	0.40	0.50

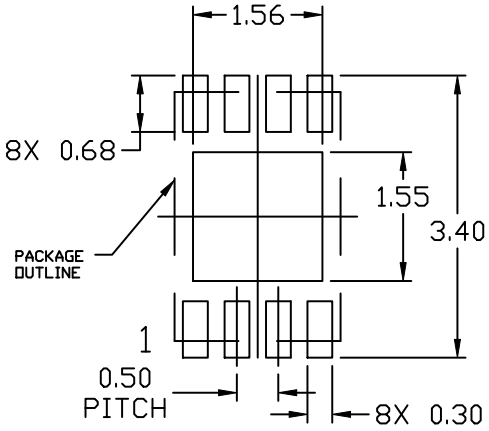

RECOMMENDED MOUNTING FOOTPRINT*

* For additional information on our Pb-Free strategy and soldering details, please download the ON Semiconductor Soldering and Mounting Techniques Reference Manual, SOLDERRM/D.

GENERIC MARKING DIAGRAM*

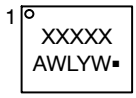

XXXXX	= Specific Device Code
A	= Assembly Location
WL	= Wafer Lot
Y	= Year
W	= Work Week
▪	= Pb−Free Package

*This information is generic. Please refer to device data sheet for actual part marking. Pb−Free indicator, “G” or microdot “▪”, may or may not be present. Some products may not follow the Generic Marking.

DOCUMENT NUMBER:	**98AON06579G**	Electronic versions are uncontrolled except when accessed directly from the Document Repository. Printed versions are uncontrolled except when stamped “CONTROLLED COPY” in red.
DESCRIPTION:	**UDFN8 2X3, 0.5P**	**PAGE 1 OF 1**

onsemi and onsemi are trademarks of Semiconductor Components Industries, LLC dba **onsemi** or its subsidiaries in the United States and/or other countries. **onsemi** reserves the right to make changes without further notice to any products herein. **onsemi** makes no warranty, representation or guarantee regarding the suitability of its products for any particular purpose, nor does **onsemi** assume any liability arising out of the application or use of any product or circuit, and specifically disclaims any and all liability, including without limitation special, consequential or incidental damages. **onsemi** does not convey any license under its patent rights nor the rights of others.

onsemi, onsemi, and other names, marks, and brands are registered and/or common law trademarks of Semiconductor Components Industries, LLC dba "**onsemi**" or its affiliates and/or subsidiaries in the United States and/or other countries. **onsemi** owns the rights to a number of patents, trademarks, copyrights, trade secrets, and other intellectual property. A listing of **onsemi**'s product/patent coverage may be accessed at www.onsemi.com/site/pdf/Patent−Marking.pdf. **onsemi** reserves the right to make changes at any time to any products or information herein, without notice. The information herein is provided "as−is" and **onsemi** makes no warranty, representation or guarantee regarding the accuracy of the information, product features, availability, functionality, or suitability of its products for any particular purpose, nor does **onsemi** assume any liability arising out of the application or use of any product or circuit, and specifically disclaims any and all liability, including without limitation special, consequential or incidental damages. Buyer is responsible for its products and applications using **onsemi** products, including compliance with all laws, regulations and safety requirements or standards, regardless of any support or applications information provided by **onsemi**. "Typical" parameters which may be provided in **onsemi** data sheets and/or specifications can and do vary in different applications and actual performance may vary over time. All operating parameters, including "Typicals" must be validated for each customer application by customer's technical experts. **onsemi** does not convey any license under any of its intellectual property rights nor the rights of others. **onsemi** products are not designed, intended, or authorized for use as a critical component in life support systems or any FDA Class 3 medical devices or medical devices with a same or similar classification in a foreign jurisdiction or any devices intended for implantation in the human body. Should Buyer purchase or use **onsemi** products for any such unintended or unauthorized application, Buyer shall indemnify and hold **onsemi** and its officers, employees, subsidiaries, affiliates, and distributors harmless against all claims, costs, damages, and expenses, and reasonable attorney fees arising out of, directly or indirectly, any claim of personal injury or death associated with such unintended or unauthorized use, even if such claim alleges that **onsemi** was negligent regarding the design or manufacture of the part. **onsemi** is an Equal Opportunity/Affirmative Action Employer. This literature is subject to all applicable copyright laws and is not for resale in any manner.

ADDITIONAL INFORMATION

TECHNICAL PUBLICATIONS:
Technical Library: www.onsemi.com/design/resources/technical−documentation
onsemi Website: www.onsemi.com

ONLINE SUPPORT: www.onsemi.com/support
For additional information, please contact your local Sales Representative at
www.onsemi.com/support/sales