MC74ACT564

Octal D-Type Flip-Flop with 3-State Outputs

The MC74ACT564 is a high−speed, low power octal flip−flop with a buffered common Clock (CP) and a buffered common Output Enable ($\overline{OE}$).

The information presented to the D inputs is stored in the flip−flops on the LOW−to−HIGH Clock (CP) transition.

The MC74ACT564 device is functionally indentical to the MC74ACT574, but with inverted outputs.

Features

- Inputs and Outputs on the Opposite Sides of the Package Allowing Easy Interface with Microprocessors
- Useful as Input or Output Port for Microprocessor
- Functionally Indentical to the MC74ACT574 but with Inverted Outputs
- 3−State Outputs for Bus−Oriented Applications
- Outputs Source/Sink 24 mA
- TTL Compatible Inputs
- These are Pb−Free Devices

ON Semiconductor®

www.onsemi.com

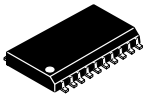

1

SOIC−20W
DW SUFFIX
CASE 751D

ORDERING INFORMATION

See detailed ordering and shipping information in the package dimensions section on page 5 of this data sheet.

DEVICE MARKING INFORMATION

See general marking information in the device marking section on page 5 of this data sheet.

DISCONTINUED
THIS DEVICE IS NOT RECOMMENDED FOR NEW DESIGN
PLEASE CONTACT YOUR onsemi
REPRESENTATIVE FOR INFORMATION

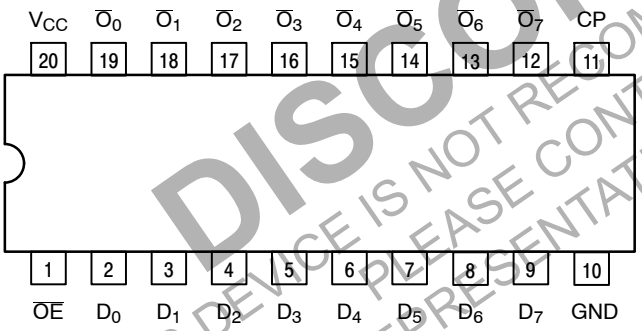

Figure 1. Pinout: 20−Lead Packages Conductors
(Top View)

PIN ASSIGNMENT

PIN	FUNCTION
D_0−D_7	Data Inputs
CP	Clock Pulse Input
$\overline{OE}$	3−State Output Enable Input
$\overline{O}_0$−$\overline{O}_7$	3−State Outputs

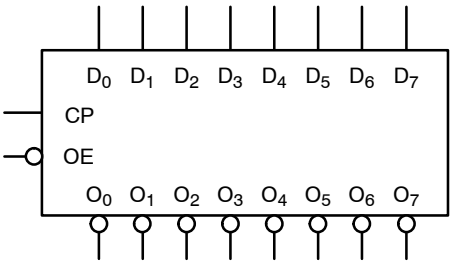

Figure 2. Logic Symbol

© Semiconductor Components Industries, LLC, 2015

May, 2024 − Rev. 5
Publication Order Number:
MC74ACT564/D

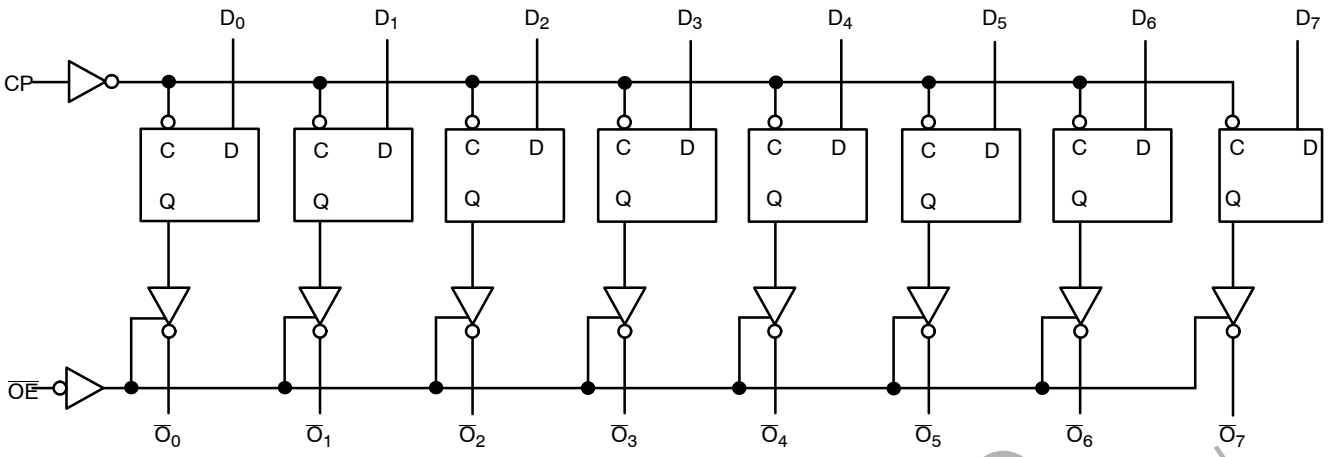

Please note that this diagram is provided only for the understanding of logic operations and should not be used to estimate propagation delays.

Figure 3. Logic Diagram

DISCONTINUED
THIS DEVICE IS NOT RECOMMENDED FOR NEW DESIGN
PLEASE CONTACT YOUR onsemi
REPRESENTATIVE FOR INFORMATION

FUNCTION TABLE

Inputs			Internal	Outputs	Function
$\overline{OE}$	CP	D	Q	O	
H	H	L	NC	Z	Hold
H	H	H	NC	Z	Hold
H	↑	L	H	Z	Load
H	↑	H	L	Z	Load
L	↑	L	H	H	Data Available
L	↑	H	L	L	Data Available
L	H	L	NC	NC	No Change in Data
L	H	H	NC	NC	No Change in Data

H = HIGH Voltage Level
L = LOW Voltage Level
X = Immaterial
Z = High Impedance
↑ = LOW−to−HIGH Transition
NC = No Change

FUNCTIONAL DESCRIPTION

The MC74ACT564 consists of eight edge−triggered flip−flops with individual D−type inputs and 3−state complementary outputs. The buffered clock and buffered Output Enable are common to all flip−flops. The eight flip−flops will store the state of their individual D inputs that meet the setup and hold times requirements on the LOW−to−HIGH Clock (CP) transition. With the Output Enable ($\overline{OE}$) LOW, the contents of the eight flip−flops are available at the outputs. When $\overline{OE}$ is HIGH, the outputs go to the high impedance state. Operation of the $\overline{OE}$ input does not affect the state of the flip−flops.

MAXIMUM RATINGS

Symbol	Parameter	Value	Unit
V_{CC}	DC Supply Voltage (Referenced to GND)	−0.5 to +7.0	V
V_{IN}	DC Input Voltage (Referenced to GND)	−0.5 to V_{CC} +0.5	V
V_{OUT}	DC Output Voltage (Referenced to GND) (Note 1)	−0.5 to V_{CC} +0.5	V
I_{IK}	DC Input Diode Current	±20	mA
I_{OK}	DC Output Diode Current	±50	mA
I_{OUT}	DC Output Sink/Source Current	±50	mA
I_{CC}	DC Supply Current, per Output Pin	±50	mA
I_{GND}	DC Ground Current, per Output Pin	±100	mA
T_{STG}	Storage Temperature Range	− 65 to + 150	°C
T_L	Lead temperature, 1 mm from Case for 10 Seconds	260	°C
T_J	Junction Temperature Under Bias	140	°C
θ_{JA}	Thermal Resistance (Note 2)	65.8	°C/W
MSL	Moisture Sensitivity	Level 1	
F_R	Flammability Rating Oxygen Index: 30% − 35%	UL 94 V−0 @ 0.125 in	
V_{ESD}	ESD Withstand Voltage Human Body Model (Note 3) Machine Model (Note 4) Charged Device Model (Note 5)	> 2000 > 200 > 1000	V
$I_{Latchup}$	Latchup Performance Above V_{CC} and Below GND at 85°C (Note 6)	±100	mA

Stresses exceeding those listed in the Maximum Ratings table may damage the device. If any of these limits are exceeded, device functionality should not be assumed, damage may occur and reliability may be affected.

1. I_{OUT} absolute maximum rating must be observed.
2. The package thermal impedance is calculated in accordance with JESD 51−7.
3. Tested to EIA/JESD22−A114−A.
4. Tested to EIA/JESD22−A115−A.
5. Tested to JESD22−C101−A.
6. Tested to EIA/JESD78.

RECOMMENDED OPERATING CONDITIONS

Symbol	Parameter	Min	Typ	Max	Unit
V_{CC}	DC Input Voltage (Referenced to GND)	4.5		5.5	V
V_{in}, V_{out}	DC Input Voltage, Output Voltage (Referenced to GND)	0		V_{CC}	V
T_A	Operating Temperature, All Package Types	−40	25	+85	°C
t_r, t_f	Input Rise and Fall Time (Note 8) V_{CC} = 4.5 V V_{CC} = 5.5 V	0 0	10 8.0	10 8.0	ns/V
I_{OH}	Output Current − High			−24	mA
I_{OL}	Output Current − Low			24	mA

Functional operation above the stresses listed in the Recommended Operating Ranges is not implied. Extended exposure to stresses beyond the Recommended Operating Ranges limits may affect device reliability.

7. Unused Inputs may not be left open. All inputs must be tied to a high voltage level or low logic voltage level.
8. V_{in} from 0.8 V to 2.0 V; refer to individual Data Sheets for devices that differ from the typical input rise and fall times.

DISCONTINUED
THIS DEVICE IS NOT RECOMMENDED FOR NEW DESIGN
PLEASE CONTACT YOUR onsemi
REPRESENTATIVE FOR INFORMATION

DC CHARACTERISTICS

Symbol	Parameter	V_{CC} (V)	T_A = +25°C Typ	T_A = +25°C Guaranteed Limits	T_A = −40°C to +85°C Guaranteed Limits	Unit	Conditions
V_{IH}	Minimum High Level Input Voltage	4.5 5.5	1.5 1.5	2.0 2.0	2.0 2.0	V V	V_{OUT} = 0.1 V or V_{CC} − 0.1 V
V_{IL}	Maximum Low Level Input Voltage	4.5 5.5	1.5 1.5	0.8 0.8	0.8 0.8	V V	V_{OUT} = 0.1 V or V_{CC} − 0.1 V
V_{OH}	Minimum High Level Output Voltage	4.5 5.5	4.49 5.49	4.4 5.4	4.4 5.4	V V	I_{OUT} = −50 μA
		4.5 5.5		3.86 4.86	3.76 4.76	V V	*V_{IN} = V_{IL} or V_{IH} −24 mA I_{OH} −24 mA
V_{OL}	Maximum Low Level Output Voltage	4.5 5.5	0.001 0.001	0.1 0.1	0.1 0.1	V V	I_{OUT} = 50 μA
		4.5 5.5		0.36 0.36	0.44 0.44	V V	*V_{IN} = V_{IL} or V_{IH} 24 mA I_{OL} 24 mA
I_{IN}	Maximum Input Leakage Current	5.5		±0.1	±1.0	μA	V_I = V_{CC}, GND
ΔI_{CCT}	Additional Max. I_{CC}/Input	5.5	0.6		1.5	mA	V_I = V_{CC} − 2.1 V
I_{OZ}	Maximum 3−State Current	5.5		±0.5	±5.0	μA	V_I (OE) = V_{IL}, V_{IH} V_I = V_{CC}, GND V_O = V_{CC}, GND
I_{OLD} I_{OHD}	†Minimum Dynamic Output Current	5.5 5.5			75 −75	mA mA	V_{OLD} = 1.65 V Max V_{OHD} = 3.85 V Min
I_{CC}	Maximum Quiescent Supply Current	5.5		8.0	80	μA	V_{IN} = V_{CC} or GND

*All outputs loaded; thresholds on input associated with output under test.
†Maximum test duration 2.0 ms, one output loaded at a time.

AC CHARACTERISTICS $t_r = t_f$ = 3.0 ns (For Figures and Waveforms, See Figures 4, 5, and 6.)

Symbol	Parameter	V_{CC}* (V)	T_A = +25°C, C_L = 50 pF Min	Typ	Max	T_A = −40°C to +85°C, C_L = 50 pF Min	Max	Unit
f_{max}	Maximum Clock Frequency	5.0	85	–	–	75	–	MHz
t_{PLH}	Propagation Delay CP to $\overline{Q}_n$	5.0	2.0	–	10.5	1.5	11.5	ns
t_{PHL}	Propagation Delay CP to $\overline{Q}_n$	5.0	1.5	–	9.5	1.5	10.5	ns
t_{PZH}	Output Enable Time	5.0	1.5	–	9.0	1.5	9.5	ns
t_{PZL}	Output Enable Time	5.0	1.5	–	8.5	1.0	9.5	ns
t_{PHZ}	Output Disable Time	5.0	1.5	–	10.5	1.5	11.5	ns
t_{PLZ}	Output Disable Time	5.0	1.5	–	8.0	1.0	8.5	ns

*Voltage Range 5.0 V is 5.0 V ±0.5 V

DISCONTINUED
THIS DEVICE IS NOT RECOMMENDED FOR NEW DESIGN
PLEASE CONTACT YOUR onsemi
REPRESENTATIVE FOR INFORMATION

AC OPERATING REQUIREMENTS

Symbol	Parameter		V_{CC}* (V)	T_A = +25°C C_L = 50 pF		T_A = −40°C to +85°C C_L = 50 pF	Unit
				Typ	Guaranteed Minimum		
t_s	Setup Time, HIGH or LOW	D_n to C_P	5.0	–	2.5	3.0	ns
t_h	Hold Time, HIGH or LOW	D_n to C_P	5.0	–	1.0	1.0	ns
t_w	C_P Pulse Width	HIGH or LOW	5.0	–	3.0	3.5	ns

*Voltage Range 3.3 V is 3.3 V ±0.3 V.
*Voltage Range 5.0 V is 5.0 V ±0.5 V.

CAPACITANCE

Symbol	Parameter	Value Typ	Unit	Test Conditions
C_{IN}	Input Capacitance	4.5	pF	V_{CC} = 5.0 V
C_{PD}	Power Dissipation Capacitance	50	pF	V_{CC} = 5.0 V

ORDERING INFORMATION

Device	Package	Shipping†
MC74ACT564DWR2G	SOIC−20 (Pb−Free)	1000 / Tape & Reel

†For information on tape and reel specifications, including part orientation and tape sizes, please refer to our Tape and Reel Packaging Specifications Brochure, BRD8011/D.

DISCONTINUED
THIS DEVICE IS NOT RECOMMENDED FOR NEW DESIGN
PLEASE CONTACT YOUR onsemi
REPRESENTATIVE FOR INFORMATION

MARKING DIAGRAMS

SOIC−20W

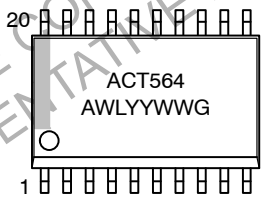

A = Assembly Location
WL = Wafer Lot
YY = Year
WW = Work Week
G = Pb−Free Package

SWITCHING WAVEFORMS

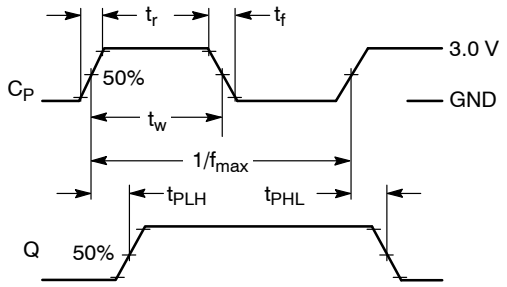

Figure 4.

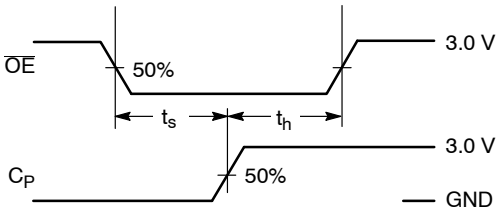

Figure 5.

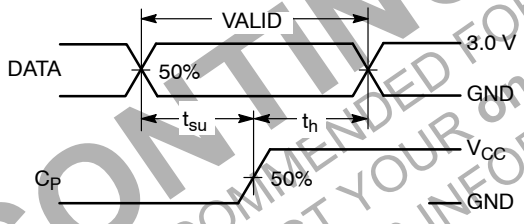

Figure 6.

DISCONTINUED
THIS DEVICE IS NOT RECOMMENDED FOR NEW DESIGN
PLEASE CONTACT YOUR onsemi
REPRESENTATIVE FOR INFORMATION

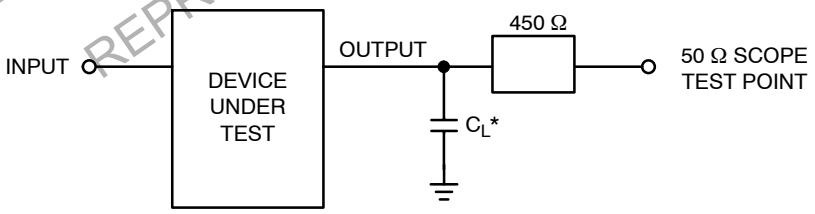

*Includes all probe and jig capacitance

Figure 7. Test Circuit

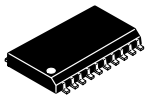

SCALE 1:1

SOIC−20 WB
CASE 751D−05
ISSUE H

DATE 22 APR 2015

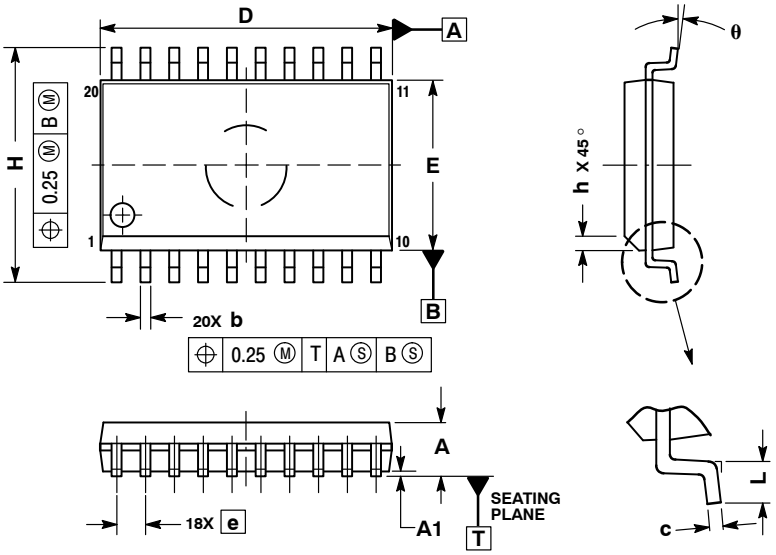

NOTES:
1. DIMENSIONS ARE IN MILLIMETERS.
2. INTERPRET DIMENSIONS AND TOLERANCES PER ASME Y14.5M, 1994.
3. DIMENSIONS D AND E DO NOT INCLUDE MOLD PROTRUSION.
4. MAXIMUM MOLD PROTRUSION 0.15 PER SIDE.
5. DIMENSION B DOES NOT INCLUDE DAMBAR PROTRUSION. ALLOWABLE PROTRUSION SHALL BE 0.13 TOTAL IN EXCESS OF B DIMENSION AT MAXIMUM MATERIAL CONDITION.

	MILLIMETERS	
DIM	MIN	MAX
A	2.35	2.65
A1	0.10	0.25
b	0.35	0.49
c	0.23	0.32
D	12.65	12.95
E	7.40	7.60
e	1.27 BSC	
H	10.05	10.55
h	0.25	0.75
L	0.50	0.90
θ	0°	7°

RECOMMENDED SOLDERING FOOTPRINT*

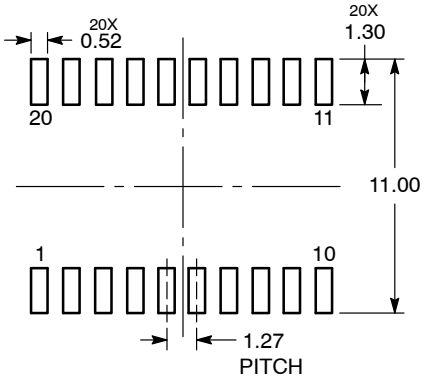

DIMENSIONS: MILLIMETERS

*For additional information on our Pb−Free strategy and soldering details, please download the **onsemi** Soldering and Mounting Techniques Reference Manual, SOLDERRM/D.

GENERIC MARKING DIAGRAM*

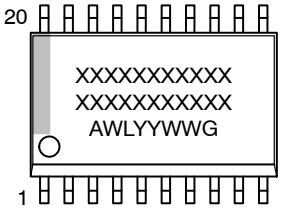

XXXXX = Specific Device Code
A = Assembly Location
WL = Wafer Lot
YY = Year
WW = Work Week
G = Pb−Free Package

*This information is generic. Please refer to device data sheet for actual part marking. Pb−Free indicator, "G" or microdot "▪", may or may not be present. Some products may not follow the Generic Marking.

DOCUMENT NUMBER:	98ASB42343B	Electronic versions are uncontrolled except when accessed directly from the Document Repository. Printed versions are uncontrolled except when stamped "CONTROLLED COPY" in red.
DESCRIPTION:	SOIC−20 WB	PAGE 1 OF 1

onsemi and onsemi are trademarks of Semiconductor Components Industries, LLC dba **onsemi** or its subsidiaries in the United States and/or other countries. **onsemi** reserves the right to make changes without further notice to any products herein. **onsemi** makes no warranty, representation or guarantee regarding the suitability of its products for any particular purpose, nor does **onsemi** assume any liability arising out of the application or use of any product or circuit, and specifically disclaims any and all liability, including without limitation special, consequential or incidental damages. **onsemi** does not convey any license under its patent rights nor the rights of others.

onsemi, onsemi, and other names, marks, and brands are registered and/or common law trademarks of Semiconductor Components Industries, LLC dba "**onsemi**" or its affiliates and/or subsidiaries in the United States and/or other countries. **onsemi** owns the rights to a number of patents, trademarks, copyrights, trade secrets, and other intellectual property. A listing of **onsemi**'s product/patent coverage may be accessed at www.onsemi.com/site/pdf/Patent−Marking.pdf. **onsemi** reserves the right to make changes at any time to any products or information herein, without notice. The information herein is provided "as−is" and **onsemi** makes no warranty, representation or guarantee regarding the accuracy of the information, product features, availability, functionality, or suitability of its products for any particular purpose, nor does **onsemi** assume any liability arising out of the application or use of any product or circuit, and specifically disclaims any and all liability, including without limitation special, consequential or incidental damages. Buyer is responsible for its products and applications using **onsemi** products, including compliance with all laws, regulations and safety requirements or standards, regardless of any support or applications information provided by **onsemi**. "Typical" parameters which may be provided in **onsemi** data sheets and/or specifications can and do vary in different applications and actual performance may vary over time. All operating parameters, including "Typicals" must be validated for each customer application by customer's technical experts. **onsemi** does not convey any license under any of its intellectual property rights nor the rights of others. **onsemi** products are not designed, intended, or authorized for use as a critical component in life support systems or any FDA Class 3 medical devices or medical devices with a same or similar classification in a foreign jurisdiction or any devices intended for implantation in the human body. Should Buyer purchase or use **onsemi** products for any such unintended or unauthorized application, Buyer shall indemnify and hold **onsemi** and its officers, employees, subsidiaries, affiliates, and distributors harmless against all claims, costs, damages, and expenses, and reasonable attorney fees arising out of, directly or indirectly, any claim of personal injury or death associated with such unintended or unauthorized use, even if such claim alleges that **onsemi** was negligent regarding the design or manufacture of the part. **onsemi** is an Equal Opportunity/Affirmative Action Employer. This literature is subject to all applicable copyright laws and is not for resale in any manner.

ADDITIONAL INFORMATION

TECHNICAL PUBLICATIONS:
Technical Library: www.onsemi.com/design/resources/technical−documentation
onsemi Website: www.onsemi.com

ONLINE SUPPORT: www.onsemi.com/support
For additional information, please contact your local Sales Representative at
www.onsemi.com/support/sales