# 5 V ECL ÷4 Divider

# MC10EL33, MC100EL33

**ON Semiconductor®**

www.onsemi.com

**SOIC−8 NB**
**D SUFFIX**
**CASE 751−07**

DISCONTINUED
THIS DEVICE IS NOT RECOMMENDED FOR NEW DESIGN
PLEASE CONTACT YOUR onsemi
REPRESENTATIVE FOR INFORMATION

### Description

The MC10EL/100EL33 is an integrated ÷4 divider. The differential clock inputs and the $V_{BB}$ allow a differential, single-ended or AC coupled interface to the device. The $V_{BB}$ pin, an internally generated voltage supply, is available to this device only. For single-ended input conditions, the unused differential input is connected to $V_{BB}$ as a switching reference voltage. $V_{BB}$ may also rebias AC coupled inputs. When used, decouple $V_{BB}$ and $V_{CC}$ via a 0.01 μF capacitor and limit current sourcing or sinking to 0.5 mA. When not used, $V_{BB}$ should be left open.

The reset pin is asynchronous and is asserted on the rising edge. Upon power-up, the internal flip-flops will attain a random state; the reset allows for the synchronization of multiple EL33's in a system.

The 100 Series contains temperature compensation.

### Features

- 650 ps Propagation Delay
- 4.0 GHz Toggle Frequency
- ESD Protection:
  - ♦ > 1 kV Human Body Model
  - ♦ > 100 V Machine Model
- PECL Mode Operating Range: $V_{CC}$ = 4.2 V to 5.7 V with $V_{EE}$ = 0 V
- NECL Mode Operating Range: $V_{CC}$ = 0 V with $V_{EE}$ = −4.2 V to −5.7 V
- Internal Input Pulldown Resistors on CLK(s) and R.
- Meets or Exceeds JEDEC Spec EIA/JESD78 IC Latchup Test
- Moisture Sensitivity:
  - ♦ Level 1 for SOIC−8 NB
  - ♦ For Additional Information, see Application Note AND8003/D
- Flammability Rating: UL 94 V−0 @ 0.125 in, Oxygen Index: 28 to 34
- Transistor Count = 95 Devices
- These Devices are Pb-Free, Halogen Free and are RoHS Compliant

### MARKING DIAGRAM

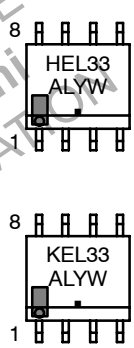


H = MC10
K = MC100
A = Assembly Location
L = Wafer Lot
Y = Year
W = Work Week
▪ = Pb-Free Package

(Note: Microdot may be in either location)

*For additional marking information, refer to Application Note AND8002/D.

### ORDERING INFORMATION

| Device | Package | Shipping |
|---|---|---|
| MC10EL33DG | SOIC−8 (Pb-Free) | 98 Units / Tube |
| MC100EL33DG | SOIC−8 (Pb-Free) | 98 Units / Tube |

© Semiconductor Components Industries, LLC, 2016

April, 2025 − Rev. 13
Publication Order Number:
MC10EL33/D

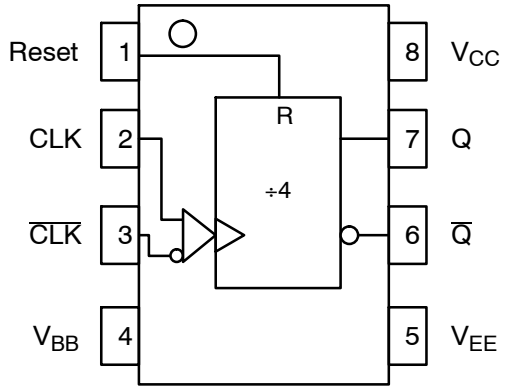


**Figure 1. Logic Diagram and Pinout Assignment**

**Table 1. PIN DESCRIPTION**

| Pin | Function |
|---|---|
| CLK, $\overline{CLK}$ | ECL Clock Inputs* |
| Reset | ECL Asynch Reset* |
| Q, $\overline{Q}$ | ECL Data Outputs |
| $V_{BB}$ | Reference Voltage Output |
| $V_{CC}$ | Positive Supply |
| $V_{EE}$ | Negative Supply |

*Pins will default low when left open.

**Table 2. MAXIMUM RATINGS**

| Symbol | Parameter | Condition 1 | Condition 2 | Rating | Unit |
|---|---|---|---|---|---|
| $V_{CC}$ | PECL Mode Power Supply | $V_{EE}$ = 0 V | | 8 | V |
| $V_{EE}$ | NECL Mode Power Supply | $V_{CC}$ = 0 V | | −8 | V |
| $V_I$ | PECL Mode Input Voltage<br>NECL Mode Input Voltage | $V_{EE}$ = 0 V<br>$V_{CC}$ = 0 V | $V_I \le V_{CC}$<br>$V_I \ge V_{EE}$ | 6<br>−6 | V |
| $I_{out}$ | Output Current | Continuous<br>Surge | | 50<br>100 | mA |
| $I_{BB}$ | $V_{BB}$ Sink/Source | | | ±0.5 | mA |
| $T_A$ | Operating Temperature Range | | | −40 to +85 | °C |
| $T_{stg}$ | Storage Temperature Range | | | −65 to +150 | °C |
| $\theta_{JA}$ | Thermal Resistance (Junction-to-Ambient) | 0 lfpm<br>500 lfpm | SOIC−8 NB<br>SOIC−8 NB | 190<br>130 | °C/W |
| $\theta_{JC}$ | Thermal Resistance (Junction-to-Case) | Standard Board | SOIC−8 NB | 41 to 44 | °C/W |
| $T_{sol}$ | Wave Solder (Pb-Free) | < 2 to 3 sec @ 260°C | | 265 | °C |

Stresses exceeding those listed in the Maximum Ratings table may damage the device. If any of these limits are exceeded, device functionality should not be assumed, damage may occur and reliability may be affected.

DISCONTINUED
THIS DEVICE IS NOT RECOMMENDED FOR NEW DESIGN
PLEASE CONTACT YOUR onsemi
REPRESENTATIVE FOR INFORMATION

**Table 3. 10EL SERIES PECL DC CHARACTERISTICS** ($V_{CC}$ = 5.0 V; $V_{EE}$ = 0.0 V (Note 1))

| Symbol | Characteristic | −40°C | | | 25°C | | | 85°C | | | Unit |
|---|---|---|---|---|---|---|---|---|---|---|---|
| | | Min | Typ | Max | Min | Typ | Max | Min | Typ | Max | |
| $I_{EE}$ | Power Supply Current | | 27 | 33 | | 27 | 33 | | 27 | 33 | mA |
| $V_{OH}$ | Output HIGH Voltage (Note 2) | 3920 | 4010 | 4110 | 4020 | 4105 | 4190 | 4090 | 4185 | 4280 | mV |
| $V_{OL}$ | Output LOW Voltage (Note 2) | 3050 | 3200 | 3350 | 3050 | 3210 | 3370 | 3050 | 3227 | 3405 | mV |
| $V_{IH}$ | Input HIGH Voltage (Single-Ended) | 3770 | | 4110 | 3870 | | 4190 | 3940 | | 4280 | mV |
| $V_{IL}$ | Input LOW Voltage (Single-Ended) | 3050 | | 3500 | 3050 | | 3520 | 3050 | | 3555 | mV |
| $V_{BB}$ | Output Voltage Reference | 3.57 | | 3.7 | 3.65 | | 3.75 | 3.69 | | 3.81 | V |
| $V_{IHCMR}$ | Input HIGH Voltage Common Mode Range (DIfferential Configuration) (Note 3) | 2.5 | | 4.6 | 2.5 | | 4.6 | 2.5 | | 4.6 | V |
| $I_{IH}$ | Input HIGH Current | | | 150 | | | 150 | | | 150 | μA |
| $I_{IL}$ | Input LOW Current | 0.5 | | | 0.5 | | | 0.3 | | | μA |

NOTE: Device will meet the specifications after thermal equilibrium has been established when mounted in a test socket or printed circuit board with maintained transverse airflow greater than 500 lfpm.

1. Input and output parameters vary 1:1 with $V_{CC}$. $V_{EE}$ can vary +0.25 V / −0.5 V.
2. Outputs are terminated through a 50 Ω resistor to $V_{CC}$ − 2.0 V.
3. $V_{IHCMR}$ min varies 1:1 with $V_{EE}$, $V_{IHCMR}$ max varies 1:1 with $V_{CC}$. The $V_{IHCMR}$ range is referenced to the most positive side of the differential input signal. Normal operation is obtained if the HIGH level falls within the specified range and the peak-to-peak voltage lies between $V_{PP}$min and 1 V.

**Table 4. 10EL SERIES NECL DC CHARACTERISTICS** ($V_{CC}$ = 0.0 V; $V_{EE}$ = −5.0 V (Note 1))

| Symbol | Characteristic | −40°C | | | 25°C | | | 85°C | | | Unit |
|---|---|---|---|---|---|---|---|---|---|---|---|
| | | Min | Typ | Max | Min | Typ | Max | Min | Typ | Max | |
| $I_{EE}$ | Power Supply Current | | 27 | 33 | | 27 | 33 | | 27 | 33 | mA |
| $V_{OH}$ | Output HIGH Voltage (Note 2) | −1080 | −990 | −890 | −980 | −895 | −810 | −910 | −815 | −720 | mV |
| $V_{OL}$ | Output LOW Voltage (Note 2) | −1950 | −1800 | −1650 | −1950 | −1790 | −1630 | −1950 | −1773 | −1595 | mV |
| $V_{IH}$ | Input HIGH Voltage (Single-Ended) | −1230 | | −890 | −1130 | | −810 | −1060 | | −720 | mV |
| $V_{IL}$ | Input LOW Voltage (Single-Ended) | −1950 | | −1500 | −1950 | | −1480 | −1950 | | −1445 | mV |
| $V_{BB}$ | Output Voltage Reference | −1.43 | | −1.30 | −1.35 | | −1.25 | −1.31 | | −1.19 | V |
| $V_{IHCMR}$ | Input HIGH Voltage Common Mode Range (DIfferential Configuration) (Note 3) | −2.5 | | −0.4 | −2.5 | | −0.4 | −2.5 | | −0.4 | V |
| $I_{IH}$ | Input HIGH Current | | | 150 | | | 150 | | | 150 | μA |
| $I_{IL}$ | Input LOW Current | 0.5 | | | 0.5 | | | 0.3 | | | μA |

NOTE: Device will meet the specifications after thermal equilibrium has been established when mounted in a test socket or printed circuit board with maintained transverse airflow greater than 500 lfpm.

1. Input and output parameters vary 1:1 with $V_{CC}$. $V_{EE}$ can vary +0.25 V / −0.5 V.
2. Outputs are terminated through a 50 Ω resistor to $V_{CC}$ − 2.0 V.
3. $V_{IHCMR}$ min varies 1:1 with $V_{EE}$, $V_{IHCMR}$ max varies 1:1 with $V_{CC}$. The $V_{IHCMR}$ range is referenced to the most positive side of the differential input signal. Normal operation is obtained if the HIGH level falls within the specified range and the peak-to-peak voltage lies between $V_{PP}$min and 1 V.

DISCONTINUED
THIS DEVICE IS NOT RECOMMENDED FOR NEW DESIGN
PLEASE CONTACT YOUR onsemi
REPRESENTATIVE FOR INFORMATION

**Table 5. 100EL SERIES PECL DC CHARACTERISTICS** ($V_{CC}$ = 5.0 V; $V_{EE}$ = 0.0 V (Note 1))

| Symbol | Characteristic | −40°C | | | 25°C | | | 85°C | | | Unit |
|---|---|---|---|---|---|---|---|---|---|---|---|
| | | Min | Typ | Max | Min | Typ | Max | Min | Typ | Max | |
| $I_{EE}$ | Power Supply Current | | 27 | 33 | | 27 | 33 | | 31 | 37 | mA |
| $V_{OH}$ | Output HIGH Voltage (Note 2) | 3915 | 3995 | 4120 | 3975 | 4045 | 4120 | 3975 | 4050 | 4120 | mV |
| $V_{OL}$ | Output LOW Voltage (Note 2) | 3170 | 3305 | 3445 | 3190 | 3295 | 3380 | 3190 | 3295 | 3380 | mV |
| $V_{IH}$ | Input HIGH Voltage (Single-Ended) | 3835 | | 4120 | 3835 | | 4120 | 3835 | | 4120 | mV |
| $V_{IL}$ | Input LOW Voltage (Single-Ended) | 3190 | | 3525 | 3190 | | 3525 | 3190 | | 3525 | mV |
| $V_{BB}$ | Output Voltage Reference | 3.62 | | 3.74 | 3.62 | | 3.74 | 3.62 | | 3.74 | V |
| $V_{IHCMR}$ | Input HIGH Voltage Common Mode Range (DIfferential Configuration) (Note 3) | 2.5 | | 4.6 | 2.5 | | 4.6 | 2.5 | | 4.6 | V |
| $I_{IH}$ | Input HIGH Current | | | 150 | | | 150 | | | 150 | μA |
| $I_{IL}$ | Input LOW Current | 0.5 | | | 0.5 | | | 0.5 | | | μA |

NOTE: Device will meet the specifications after thermal equilibrium has been established when mounted in a test socket or printed circuit board with maintained transverse airflow greater than 500 lfpm.

1. Input and output parameters vary 1:1 with $V_{CC}$. $V_{EE}$ can vary +0.8 V / −0.5 V.
2. Outputs are terminated through a 50 Ω resistor to $V_{CC}$ − 2.0 V.
3. $V_{IHCMR}$ min varies 1:1 with $V_{EE}$, $V_{IHCMR}$ max varies 1:1 with $V_{CC}$. The $V_{IHCMR}$ range is referenced to the most positive side of the differential input signal. Normal operation is obtained if the HIGH level falls within the specified range and the peak-to-peak voltage lies between $V_{PP}$min and 1 V.

**Table 6. 100EL SERIES NECL DC CHARACTERISTICS** ($V_{CC}$ = 0.0 V; $V_{EE}$ = −5.0 V (Note 1))

| Symbol | Characteristic | −40°C | | | 25°C | | | 85°C | | | Unit |
|---|---|---|---|---|---|---|---|---|---|---|---|
| | | Min | Typ | Max | Min | Typ | Max | Min | Typ | Max | |
| $I_{EE}$ | Power Supply Current | | 27 | 33 | | 27 | 33 | | 31 | 37 | mA |
| $V_{OH}$ | Output HIGH Voltage (Note 2) | −1085 | −1005 | −880 | −1025 | −955 | −880 | −1025 | −955 | −880 | mV |
| $V_{OL}$ | Output LOW Voltage (Note 2) | −1830 | −1695 | −1555 | −1810 | −1705 | −1620 | −1810 | −1705 | −1620 | mV |
| $V_{IH}$ | Input HIGH Voltage (Single-Ended) | −1165 | | −880 | −1165 | | −880 | −1165 | | −880 | mV |
| $V_{IL}$ | Input LOW Voltage (Single-Ended) | −1810 | | −1475 | −1810 | | −1475 | −1810 | | −1475 | mV |
| $V_{BB}$ | Output Voltage Reference | −1.38 | | −1.26 | −1.38 | | −1.26 | −1.38 | | −1.26 | V |
| $V_{IHCMR}$ | Input HIGH Voltage Common Mode Range (DIfferential Configuration) (Note 3) | −2.5 | | −0.4 | −2.5 | | −0.4 | −2.5 | | −0.4 | V |
| $I_{IH}$ | Input HIGH Current | | | 150 | | | 150 | | | 150 | μA |

NOTE: Device will meet the specifications after thermal equilibrium has been established when mounted in a test socket or printed circuit board with maintained transverse airflow greater than 500 lfpm.

1. Input and output parameters vary 1:1 with $V_{CC}$. $V_{EE}$ can vary +0.8 V / −0.5 V.
2. Outputs are terminated through a 50 Ω resistor to $V_{CC}$ − 2.0 V.
3. $V_{IHCMR}$ min varies 1:1 with $V_{EE}$, $V_{IHCMR}$ max varies 1:1 with $V_{CC}$. The $V_{IHCMR}$ range is referenced to the most positive side of the differential input signal. Normal operation is obtained if the HIGH level falls within the specified range and the peak-to-peak voltage lies between $V_{PP}$min and 1 V.

DISCONTINUED
onsemi
THIS DEVICE IS NOT RECOMMENDED FOR NEW DESIGN
PLEASE CONTACT YOUR onsemi REPRESENTATIVE FOR INFORMATION

**Table 7. AC CHARACTERISTICS** ($V_{CC}$ = 5.0 V; $V_{EE}$ = 0.0 V or $V_{CC}$ = 0.0 V; $V_{EE}$ = −5.0 V (Note 1))

| Symbol | Characteristic | −40°C | | | 25°C | | | 85°C | | | Unit |
|---|---|---|---|---|---|---|---|---|---|---|---|
| | | Min | Typ | Max | Min | Typ | Max | Min | Typ | Max | |
| fmax | Maximum Toggle Frequency | 3.4 | 4.2 | | 3.8 | 4.2 | | 3.8 | 4.2 | | GHz |
| $t_{PLH}$<br>$t_{PHL}$ | Propagation Delay<br>CLK to Q<br>Reset to Q | <br>560<br>400 | <br>670<br>540 | <br>860<br>700 | <br>610<br>460 | <br>700<br>550 | <br>810<br>660 | <br>640<br>570 | <br>740<br>480 | <br>840<br>670 | ps |
| $t_{RR}$ | Set/Reset Recovery | 400 | 200 | | 400 | 200 | | 400 | 200 | | ps |
| $V_{PP}$ | Input Swing (Note 2) | 150 | | 1000 | 150 | | 1000 | 150 | | 1000 | mV |
| $t_{JITTER}$ | Cycle-to-Cycle Jitter | | 1.0 | | | 1.0 | | | 1.0 | | ps |
| $t_r$<br>$t_f$ | Output Rise/Fall Times Q (20%−80%) | 100 | 225 | 350 | 100 | 225 | 350 | 100 | 225 | 350 | ps |

NOTE: Device will meet the specifications after thermal equilibrium has been established when mounted in a test socket or printed circuit board with maintained transverse airflow greater than 500 lfpm.

1. 10 Series: $V_{EE}$ can vary +0.25 V / −0.5 V.
   100 Series: $V_{EE}$ can vary +0.8 V / −0.5 V.
2. $V_{PP}$(min) is minimum input swing for which AC parameters guaranteed. The device has a DC gain of ≈40.

DISCONTINUED
THIS DEVICE IS NOT RECOMMENDED FOR NEW DESIGN
PLEASE CONTACT YOUR onsemi
REPRESENTATIVE FOR INFORMATION

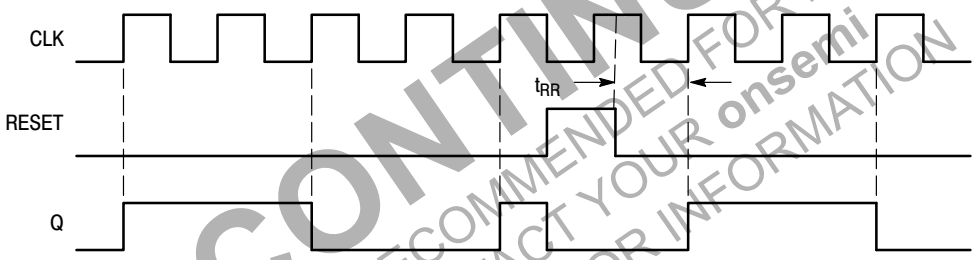


**Figure 2. Timing Diagram**

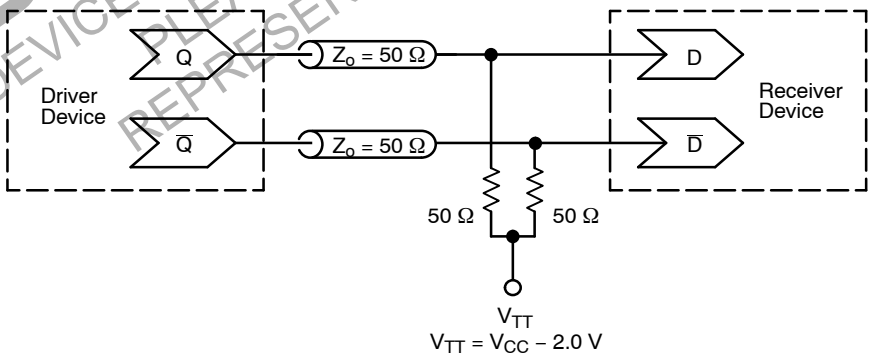


**Figure 3. Typical Termination for Output Driver and Device Evaluation (See Application Note AND8020/D – Termination of ECL Logic Devices)**

### Resource Reference of Application Notes

**AN1405/D** – ECL Clock Distribution Techniques

**AN1406/D** – Designing with PECL (ECL at +5.0 V)

**AN1503/D** – ECLinPS™ I/O SPiCE Modeling Kit

**AN1504/D** – Metastability and the ECLinPS Family

**AN1568/D** – Interfacing Between LVDS and ECL

**AN1672/D** – The ECL Translator Guide

**AND8001/D** – Odd Number Counters Design

**AND8002/D** – Marking and Date Codes

**AND8020/D** – Termination of ECL Logic Devices

**AND8066/D** – Interfacing with ECLinPS

**AND8090/D** – AC Characteristics of ECL Devices

DISCONTINUED
THIS DEVICE IS NOT RECOMMENDED FOR NEW DESIGN
PLEASE CONTACT YOUR onsemi
REPRESENTATIVE FOR INFORMATION

ECLinPS is a trademark of Semiconductor Components Industries, LLC (SCILLC) or its subsidiaries in the United States and/or other countries.

**onsemi**, onsemi, and other names, marks, and brands are registered and/or common law trademarks of Semiconductor Components Industries, LLC dba "**onsemi**" or its affiliates and/or subsidiaries in the United States and/or other countries. **onsemi** owns the rights to a number of patents, trademarks, copyrights, trade secrets, and other intellectual property. A listing of **onsemi**'s product/patent coverage may be accessed at www.onsemi.com/site/pdf/Patent−Marking.pdf. **onsemi** reserves the right to make changes at any time to any products or information herein, without notice. The information herein is provided "as−is" and **onsemi** makes no warranty, representation or guarantee regarding the accuracy of the information, product features, availability, functionality, or suitability of its products for any particular purpose, nor does **onsemi** assume any liability arising out of the application or use of any product or circuit, and specifically disclaims any and all liability, including without limitation special, consequential or incidental damages. Buyer is responsible for its products and applications using **onsemi** products, including compliance with all laws, regulations and safety requirements or standards, regardless of any support or applications information provided by **onsemi**. "Typical" parameters which may be provided in **onsemi** data sheets and/or specifications can and do vary in different applications and actual performance may vary over time. All operating parameters, including "Typicals" must be validated for each customer application by customer's technical experts. **onsemi** does not convey any license under any of its intellectual property rights nor the rights of others. **onsemi** products are not designed, intended, or authorized for use as a critical component in life support systems or any FDA Class 3 medical devices or medical devices with a same or similar classification in a foreign jurisdiction or any devices intended for implantation in the human body. Should Buyer purchase or use **onsemi** products for any such unintended or unauthorized application, Buyer shall indemnify and hold **onsemi** and its officers, employees, subsidiaries, affiliates, and distributors harmless against all claims, costs, damages, and expenses, and reasonable attorney fees arising out of, directly or indirectly, any claim of personal injury or death associated with such unintended or unauthorized use, even if such claim alleges that **onsemi** was negligent regarding the design or manufacture of the part. **onsemi** is an Equal Opportunity/Affirmative Action Employer. This literature is subject to all applicable copyright laws and is not for resale in any manner.

## ADDITIONAL INFORMATION

**TECHNICAL PUBLICATIONS**:
**Technical Library:** www.onsemi.com/design/resources/technical−documentation
**onsemi Website:** www.onsemi.com

**ONLINE SUPPORT**: www.onsemi.com/support
**For additional information, please contact your local Sales Representative at**
www.onsemi.com/support/sales