FSA8008A

Audio Jack Detection and Configuration Switch

The FSA8008A is an audio jack detector and switch for 3− or 4−pole accessories. In addition to detection, the FSA8008A features an integrated MIC switch that allows the processor to configure the audio jack. The architecture is designed to allow common third−party headphones to be used for listening to music from mobile handsets, personal media players, and portable peripheral devices.

Features

- Determines 3− or 4−Pole Audio Jacks
- Removes Audio Jack Pop−n−Click Caused by MIC Bias
- Detects Audio Jack Accessories:
  - Standard Headphones
  - Headsets with MIC
  - Send / End Button Presses
- Integrates a MIC Switch for 4−Pole Configuration

Applications

- 3.5 mm and 2.5 mm Audio Jacks
- Cellular Phones, Smartphones
- MP3 and PMP

Related Resources

- FSA8008A Demonstration Board

ON Semiconductor®

www.onsemi.com

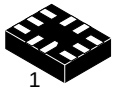

1

UQFN10
CASE 523BC

Detection	Accessory Plug−In 3− or 4−Pole Audio Jack Send/End Key Pressed
Functionality	Decreased Timing for Sensitive Send/End Keys
Switch Type	MIC
V_{DD}	2.5 to 4.4 V
V_{IO}	1.6 to V_{DD}
THD (MIC)	0.01% Typical
ESD (Air Gap)	15 kV
Operating Temperature	−40°C to 85°C
Package	10−Lead UMLP 1.4 x 1.8 x 0.5 mm, 0.4 mm Pitch
Top Mark	KD
Ordering Information	FSA8008AUMX

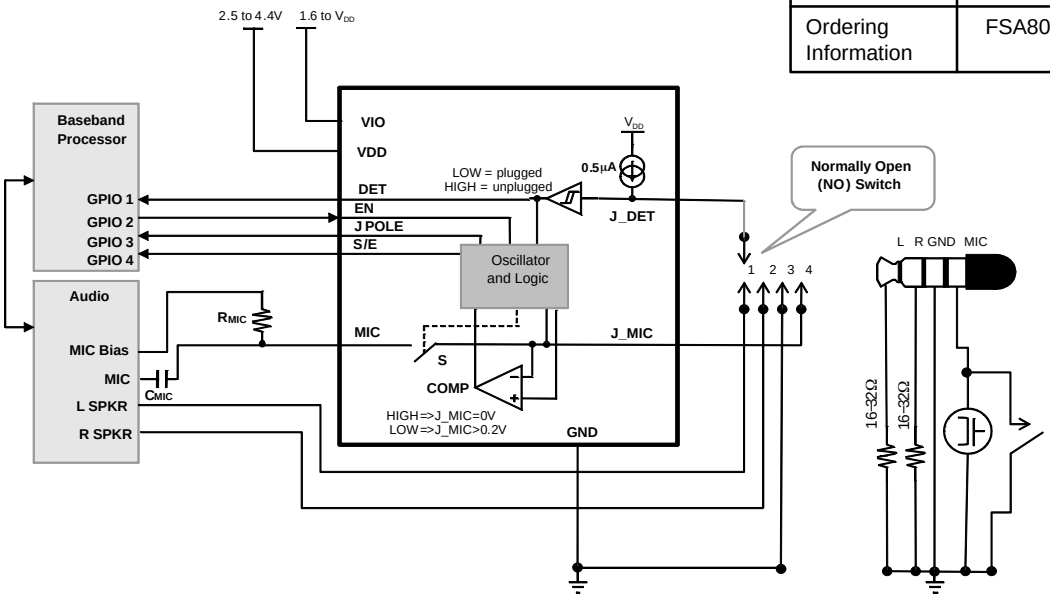

Figure 1. Mobile Phone Example

© Semiconductor Components Industries, LLC, 2011

Pin Configuration

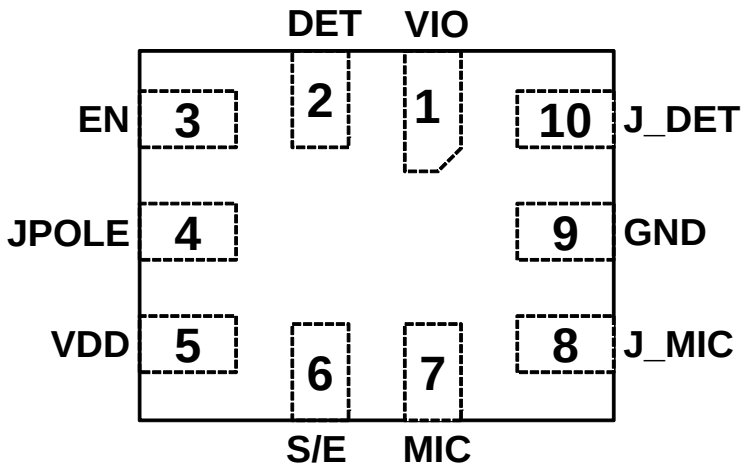

Figure 2. 10−Lead UMLP Pin Assignment (Through View)

Table 1. PIN DESCRIPTIONS

Name	Pin #	Type	Description	Function	
DET	2	Output	Indicates if an accessory is plugged into the audio jack, as detected on the J_DET pin	0	Plugged
				1	Unplugged
JPOLE	4	Output	Indicates if an accessory plugged into the audio jack is 3 pole or 4 pole	0	4−pole jack
				1	3−pole jack
S/E	6	Output	Indicates state of SEND/END for a 4−pole accessory when a key has been pressed	0	No key press
				1	Key press
EN	3	Input	Controls internal microphone switch between the J_MIC and MIC pins	0	MIC / J_MIC switch open
				1	MIC / J_MIC switch closed
J_DET	10	Input	Input from a pin of the audio jack socket tied to a mechanical switch that typically closes whenever an audio jack is inserted into that socket	0	Plugged
				1	Unplugged
MIC	7	Switch	Microphone switch path that goes to the microphone preamplifier	See EN pin	
J_MIC	8	Switch	Microphone switch path that connects to the microphone and SEND/END key audio jack pole		
VDD	5	Power	Core supply voltage		
VIO	1	Power	Baseband I/O supply voltage		
GND	9	Ground	Ground for both the audio jack and the PCB		

1. 0 = V_{OL} or V_{IL}; 1 = V_{OH} or V_{IH}

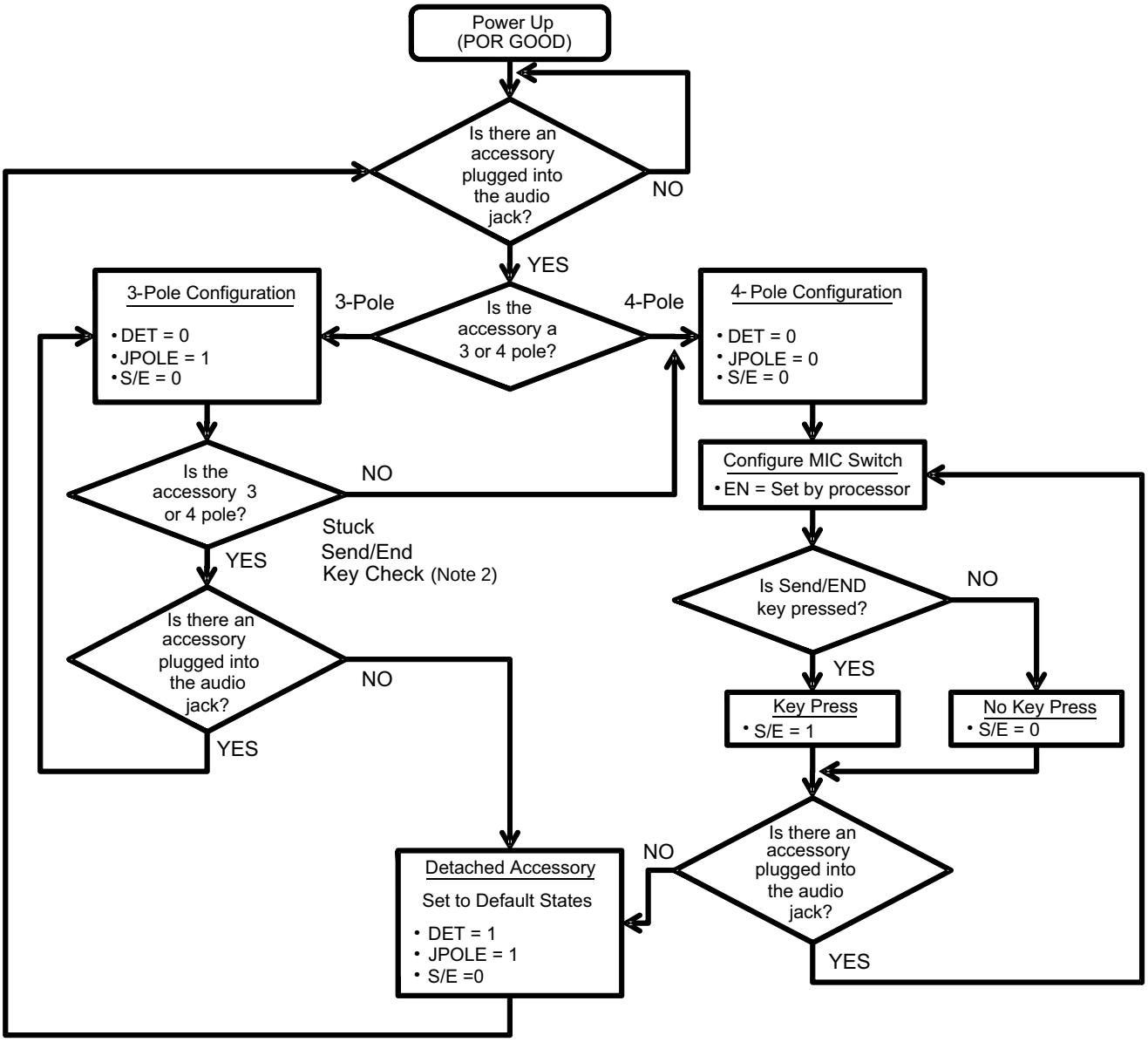

Figure 3. Functional Flow Diagram

2. Stuck Send/End key function is only available if EN=H.

Table 2. STUCK SEND/END KEY

EN	FSA8008A
H	Stuck Send / End Key Active
L	Stuck Send / End Key Disabled

Table 3. STATES DURING POWER GOOD AND OFF

State Description	VDD	VIO	DET	EN	JPOLE	S/E	J−DET	MIC Switch
Active	1	1	Active					
OFF	0	0	1 (unplugged)	3−State	1 (3 Pole)	0 (No Press)	H (unplugged)	Open
	1	0						
	0	1						

Table 4. I/O STATES DURING DETECTION (Note 3)

J_DET	J_MIC	EN	S/E		JPOLE		DET
			3 Pole	4 Pole	3 Pole	4 Pole	
0	1	1	0 (no press)	0 (no press)	0 (4 Pole)	0 (4 Pole)	0
0	0	0	0 (no press)	1 (press)	1 (3 Pole)	0 (4 Pole)	0
0	1	0	0 (no press)	0 (no press)	1 (3 Pole)	0 (4 Pole)	0
0	0	1	0 (no press)	1 (press)	1 (3 Pole)	0 (4 Pole)	0
1	X	X	0 (no press)	0 (no press)	1 (3 Pole)	1 (3 Pole)	1

3. State detected after initial plug−in.

Table 5. ABSOLUTE MAXIMUM RATINGS

Symbol	Parameter		Min	Max	Units
V_{DD} & V_{IO}	Supply Voltage from Battery		−0.5	6.0	V
V_{SW}	Switch I/O Voltage for “S” Switch and All Input Voltages Except J_DET		−0.5	V_{DD}+0.5	V
V_{JD}	Input Voltage for J_DET Input		−1.5	V_{DD}+0.5	V
I_{IK}	Input Clamp Diode Current		−50		mA
I_{SW}	Switch I/O Current (Continuous)			50	mA
T_{STG}	Storage Temperature Range		−65	+150	°C
T_J	Maximum Junction Temperature			+150	°C
T_L	Lead Temperature (Soldering, 10 Seconds)			+260	°C
ESD	IEC 61000−4−2 System ESD	Air Gap	15.0		kV
		Contact	8.0		
	JEDEC JESD22−A114, Human Body Model	All Pins	7.5		
		J_DET, J_MIC, V_{DD}, V_{IO}	12.0		
	JEDEC JESD22−C101, Charged Device Model	All Pins	2.0		

Stresses exceeding those listed in the Maximum Ratings table may damage the device. If any of these limits are exceeded, device functionality should not be assumed, damage may occur and reliability may be affected.

4. The input and output negative ratings may be exceeded if the input and output diode current ratings are observed.

Table 6. RECOMMENDED OPERATING CONDITIONS

Symbol	Parameter	Min	Max	Units
V_{DD}	Battery Supply Voltage	2.5	4.4	V
V_{IO}	Parallel I/O Supply Voltage	1.6	V_{DD}	V
T_A	Operating Temperature	−40	+85	°C

Functional operation above the stresses listed in the Recommended Operating Ranges is not implied. Extended exposure to stresses beyond the Recommended Operating Ranges limits may affect device reliability.

Table 7. DC ELECTRICAL CHARACTERISTICS All typical values are at T_A = 25°C unless otherwise specified.

Symbol	Parameter	V_{DD} (V)	Conditions	T_A = −40 to +85°C Min	Typ	Max	Units
MIC SWITCH							
R_{ON}	Mic Switch On Resistance	2.5	I_{OUT} = 30 mA, V_{IN} = 2.0 V		0.9	2.9	Ω
		2.8			0.8	2.5	
		3.8			0.6	2.0	
$R_{FLAT(ON)}$	On Resistance Flatness	2.5	I_{OUT} = 30 mA, V_{IN} = 1.6, 2.0, 2.5		1.50		
		2.8	I_{OUT} = 30 mA, V_{IN} = 1.6, 2.0, 2.8		0.70		
		3.8			0.25		
V_{IN}	Switch Input Voltage Range	2.5 to 4.4		0		V_{DD}	V
C_{ON}	MIC and J_MIC Switch ON Capacitance	3.8	f = 1 MHz		76		pF
C_{OFF}	MIC and J_MIC Switch OFF Capacitance	3.8	f = 1 MHz		24		pF
J_DET							
J_DET_{AudioV}	Audio Voltage Range on J_DET Pin	2.5 to 4.4	DET = L	−1		1	V
J_DET_{Audiof}	Audio Frequency on J_DET Pin	2.5 to 4.4	DET = L	20		20000	Hz
J_DET_{RGND}	Detection Resistance to Ground	2.5 to 4.4	Audio Jack Inserted	0		500	KΩ
J_DET_{HYS}	Hysteresis of J_DET				100		mV
PARALLEL I/O							
V_{IH}	Input High Voltage			0.7 x V_{IO}		V_{IO}	V
V_{IL}	Input Low Voltage					0.3 x V_{IO}	V
V_{OH}	Output High Voltage	I_{OH} = −100 μA		0.8 x V_{IO}			V
V_{OL}	Output Low Voltage	I_{OL} = +100 μA				0.2 x V_{IO}	V
COMPARATOR							
V_{COMP}	Comparator Threshold for SEND/END Sensing	2.5−3.8	J_DET, EN = L		200		mV
CURRENT							
I_{OFF}	Power Off Leakage Current Through Switch	0	MIC and J_MIC Ports V_{IN} = 4.4 V			1.5	μA
I_{IN}	Input Leakage Current	0 to 4.4	Inputs 0 = 4.4 V			1	μA
$I_{CC-SLNA}$	Battery Supply Sleep Mode Current No Accessory Attached	2.5 to 4.4	Static Current During Sleep Mode (EN = L)		1	3	μA
$I_{CC-SLWA}$	Battery Supply Sleep Mode Current with Accessory Attached	2.5 to 4.4	Active Current (EN = L and/or DET = H)		15	25	μA

Product parametric performance is indicated in the Electrical Characteristics for the listed test conditions, unless otherwise noted. Product performance may not be indicated by the Electrical Characteristics if operated under different conditions.

Table 8. AC ELECTRICAL CHARACTERISTICS All typical values are for V_{CC} = 3.3 V at T_A = 25°C unless otherwise specified.

Symbol	Parameter	V_{DD} (V)	Conditions	T_A = −40 to +85°C Min	Typ	Max	Unit
MIC SWITCH							
THD	Total Harmonic Distortion	3.8	R_T = 600 Ω, V_{SW} = 0.5 V_{PP}, f = 20 Hz to 20 kHz, V_{IN} = 2.0 V		0.01		%
O_{IRR}	Off Isolation	3.8	f = 20 kHz, R_S = 32 Ω, C_L = 0 pF, R_T = 32 Ω		−90		dB
PARALLEL I/O							
t_R, t_F	Output Edge Rates (DET, S/E, JPOLE)	2.5	C_L = 5 pF, 20% to 80%		19		ns
		3.8			15		
t_{POLL}	On Time of MIC Switch for Sensing SEND/END Button Press Oscillator Stable Time	2.5 to 4.4			1		ms
t_{PER}	Period of MIC Switching Time for Sensing SEND/END Button Press	2.5 to 4.4			10		
t_{DET-IN}	Debounce Time after J−DET Changes State from High to Low	2.5 to 4.4			422		ms
t_{DET_REM}	Debounce Time after J_DET Changes State from Low to High	2.5 to 4.4			30		μs
t_{DET}	Detection Timeout for Sensing 3−Pole or 4−Pole Audio Jack Plugged In	2.5 to 4.4			4.5		ms
t_{KBK}	Debounce Time for Sensing SEND/END Key Press / Release	2.5 to 4.4			27		ms
POWER							
PSRR	Power Supply Rejection Ratio	3.8	Power Supply Noise 300 mV_{PP}, Measured 10/90%, f = 217 Hz		−90		dB

ORDERING INFORMATION

Part Number	Operating Temperature Range	Top Mark	Package
FSA8008AUMX	−40 to +85°C	KD	10−Lead, 1.4 x 1.8 x 0.55 mm, 0.4 mm Pitch, Ultrathin Molded Leadless Package (UMLP)

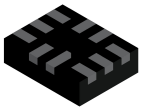

UQFN10 1.4x1.8, 0.4P
CASE 523BC
ISSUE B

DATE 13 MAY 2022

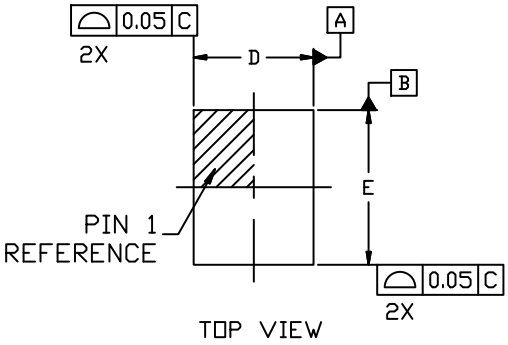

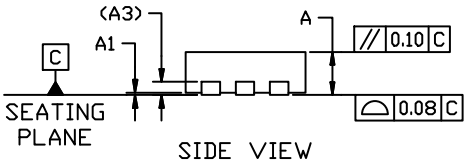

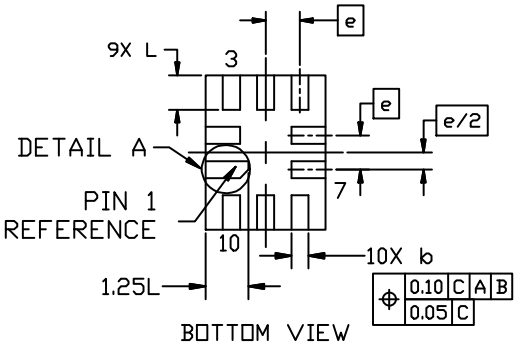

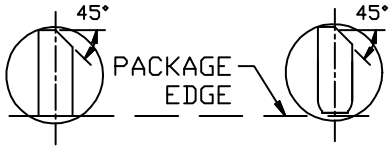

DETAIL A

OPTIONAL CONSTRUCTIONS

NOTES:

1. DIMENSIONING AND TOLERANCING PER ASME Y14.5, 2018
2. ALL DIMENSIONS ARE IN MILLIMETERS
3. DIMENSION b APPLIES TO PLATED TERMINALS AND IS MEASURED BETWEEN 0.15mm AND 0.30mm FROM THE TERMINAL TIP.
4. COPLANARITY APPLIES TO THE EXPOSED PAD AS WELL AS THE TERMINALS

DIM	MILLIMETERS		
	MIN.	NOM.	MAX.
A	0.45	0.50	0.55
A1	0.00	0.025	0.05
A3	0.152 REF		
b	0.15	0.20	0.25
D	1.35	1.40	1.45
E	1.75	1.80	1.85
e	0.40 BSC		
L	0.35	0.40	0.45

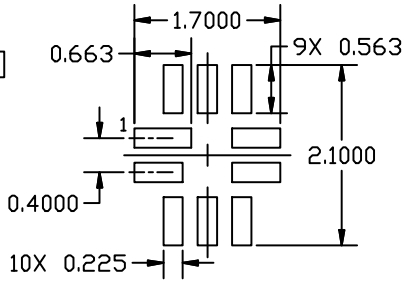

RECOMMENDED LAND PATTERN

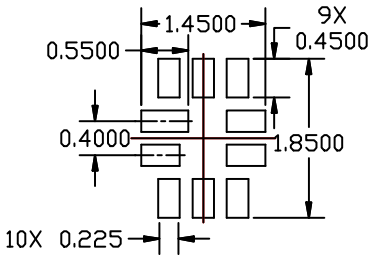

OPTIONAL MINIMIAL TOE LAND PATTERN

RECOMMENDED MOUNTING FOOTPRINT

For additional information on our Pb-Free strategy and soldering details, please download the onsemi Soldering and Mounting Techniques Reference Manual, SOLDERRM/D.

DOCUMENT NUMBER:	98AON13705G	Electronic versions are uncontrolled except when accessed directly from the Document Repository. Printed versions are uncontrolled except when stamped "CONTROLLED COPY" in red.
DESCRIPTION:	UQFN10 1.4x1.8, 0.4P	PAGE 1 OF 1

onsemi and onsemi are trademarks of Semiconductor Components Industries, LLC dba **onsemi** or its subsidiaries in the United States and/or other countries. **onsemi** reserves the right to make changes without further notice to any products herein. **onsemi** makes no warranty, representation or guarantee regarding the suitability of its products for any particular purpose, nor does **onsemi** assume any liability arising out of the application or use of any product or circuit, and specifically disclaims any and all liability, including without limitation special, consequential or incidental damages. **onsemi** does not convey any license under its patent rights nor the rights of others.

onsemi, onsemi, and other names, marks, and brands are registered and/or common law trademarks of Semiconductor Components Industries, LLC dba "**onsemi**" or its affiliates and/or subsidiaries in the United States and/or other countries. **onsemi** owns the rights to a number of patents, trademarks, copyrights, trade secrets, and other intellectual property. A listing of **onsemi**'s product/patent coverage may be accessed at www.onsemi.com/site/pdf/Patent−Marking.pdf. **onsemi** reserves the right to make changes at any time to any products or information herein, without notice. The information herein is provided "as−is" and **onsemi** makes no warranty, representation or guarantee regarding the accuracy of the information, product features, availability, functionality, or suitability of its products for any particular purpose, nor does **onsemi** assume any liability arising out of the application or use of any product or circuit, and specifically disclaims any and all liability, including without limitation special, consequential or incidental damages. Buyer is responsible for its products and applications using **onsemi** products, including compliance with all laws, regulations and safety requirements or standards, regardless of any support or applications information provided by **onsemi**. "Typical" parameters which may be provided in **onsemi** data sheets and/or specifications can and do vary in different applications and actual performance may vary over time. All operating parameters, including "Typicals" must be validated for each customer application by customer's technical experts. **onsemi** does not convey any license under any of its intellectual property rights nor the rights of others. **onsemi** products are not designed, intended, or authorized for use as a critical component in life support systems or any FDA Class 3 medical devices or medical devices with a same or similar classification in a foreign jurisdiction or any devices intended for implantation in the human body. Should Buyer purchase or use **onsemi** products for any such unintended or unauthorized application, Buyer shall indemnify and hold **onsemi** and its officers, employees, subsidiaries, affiliates, and distributors harmless against all claims, costs, damages, and expenses, and reasonable attorney fees arising out of, directly or indirectly, any claim of personal injury or death associated with such unintended or unauthorized use, even if such claim alleges that **onsemi** was negligent regarding the design or manufacture of the part. **onsemi** is an Equal Opportunity/Affirmative Action Employer. This literature is subject to all applicable copyright laws and is not for resale in any manner.

ADDITIONAL INFORMATION

TECHNICAL PUBLICATIONS:
Technical Library: www.onsemi.com/design/resources/technical−documentation
onsemi Website: www.onsemi.com

ONLINE SUPPORT: www.onsemi.com/support
For additional information, please contact your local Sales Representative at
www.onsemi.com/support/sales