FAIRCHILD™

Is Now Part of

ON Semiconductor®

To learn more about ON Semiconductor, please visit our website at
www.onsemi.com

Please note: As part of the Fairchild Semiconductor integration, some of the Fairchild orderable part numbers will need to change in order to meet ON Semiconductor's system requirements. Since the ON Semiconductor product management systems do not have the ability to manage part nomenclature that utilizes an underscore (_), the underscore (_) in the Fairchild part numbers will be changed to a dash (-). This document may contain device numbers with an underscore (_). Please check the ON Semiconductor website to verify the updated device numbers. The most current and up-to-date ordering information can be found at www.onsemi.com. Please email any questions regarding the system integration to Fairchild_questions@onsemi.com.

ON Semiconductor and the ON Semiconductor logo are trademarks of Semiconductor Components Industries, LLC dba ON Semiconductor or its subsidiaries in the United States and/or other countries. ON Semiconductor owns the rights to a number of patents, trademarks, copyrights, trade secrets, and other intellectual property. A listing of ON Semiconductor's product/patent coverage may be accessed at www.onsemi.com/site/pdf/Patent-Marking.pdf. ON Semiconductor reserves the right to make changes without further notice to any products herein. ON Semiconductor makes no warranty, representation or guarantee regarding the suitability of its products for any particular purpose, nor does ON Semiconductor assume any liability arising out of the application or use of any product or circuit, and specifically disclaims any and all liability, including without limitation special, consequential or incidental damages. Buyer is responsible for its products and applications using ON Semiconductor products, including compliance with all laws, regulations and safety requirements or standards, regardless of any support or applications information provided by ON Semiconductor. "Typical" parameters which may be provided in ON Semiconductor data sheets and/or specifications can and do vary in different applications and actual performance may vary over time. All operating parameters, including "Typicals" must be validated for each customer application by customer's technical experts. ON Semiconductor does not convey any license under its patent rights nor the rights of others. ON Semiconductor products are not designed, intended, or authorized for use as a critical component in life support systems or any FDA Class 3 medical devices or medical devices with a same or similar classification in a foreign jurisdiction or any devices intended for implantation in the human body. Should Buyer purchase or use ON Semiconductor products for any such unintended or unauthorized application, Buyer shall indemnify and hold ON Semiconductor and its officers, employees, subsidiaries, affiliates, and distributors harmless against all claims, costs, damages, and expenses, and reasonable attorney fees arising out of, directly or indirectly, any claim of personal injury or death associated with such unintended or unauthorized use, even if such claim alleges that ON Semiconductor was negligent regarding the design or manufacture of the part. ON Semiconductor is an Equal Opportunity/Affirmative Action Employer. This literature is subject to all applicable copyright laws and is not for resale in any manner.

FAIRCHILD SEMICONDUCTOR®

October 2013

FL7930B
Single-Stage Flyback and Boundary-Mode PFC Controller for Lighting

Features

- Additional OVP Detection Pin
- V_{IN}-Absent Detection
- Maximum Switching Frequency Limitation
- Internal Soft-Start and Startup without Overshoot
- Internal Total Harmonic Distortion (THD) Optimizer
- Precise Adjustable Output Over-Voltage Protection
- Open-Feedback Protection and Disable Function
- Zero Current Detector (ZCD)
- 150 µs Internal Startup Timer
- MOSFET Over-Current Protection (OCP)
- Under-Voltage Lockout with 3.5 V Hysteresis
- Low Startup and Operating Current
- Totem-Pole Output with High State Clamp
- +500/-800 mA Peak Gate Drive Current
- 8-Pin, Small-Outline Package (SOP)

Applications

- Ballast
- General LED Lighting
- Industrial, Commercial, and Residential Fixtures
- Outdoor Lighting: Street, Roadway, Parking, Construction, Ornamental LED Lighting Fixtures

Description

The FL7930B is an active power factor correction (PFC) controller for boost PFC applications that operate in critical conduction mode (CRM). It uses a voltage-mode PWM that compares an internal ramp signal with the error amplifier output to generate a MOSFET turn-off signal. Because the voltage-mode CRM PFC controller does not need rectified AC line voltage information, it saves the power loss of an input voltage sensing network necessary for a current-mode CRM PFC controller.

FL7930B provides over-voltage protection (OVP), open-feedback protection, over-current protection (OCP), input-voltage-absent detection, and under-voltage lockout protection (UVLO). The additional OVP pin can be used to shut down the boost power stage when output voltage exceeds OVP level due to the resistors that are connected at INV pin are damaged. The FL7930B can be disabled if the INV pin voltage is lower than 0.45 V and the operating current decreases to a very low level. Using a new variable on-time control method, total harmonic distortion (THD) is lower than in conventional CRM boost PFC ICs.

Ordering Information

Part Number	Operating Temperature Range	Top Mark	Package	Packing Method
FL7930BMX_G	-40 to +125°C	FL7930BG	8-Lead Small Outline Package (SOP)	Tape & Reel

© 2010 Fairchild Semiconductor Corporation

Application Diagram

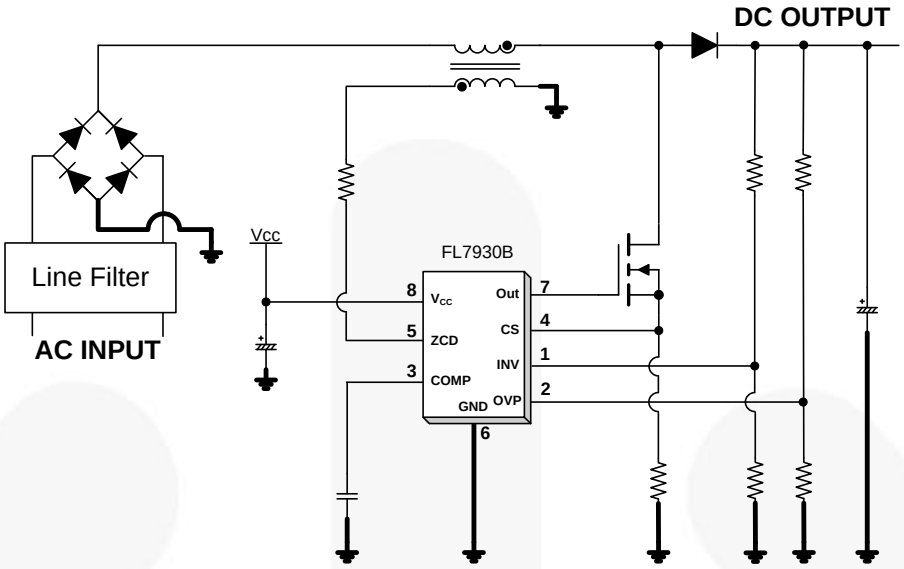

Figure 1. Typical Boost PFC Application

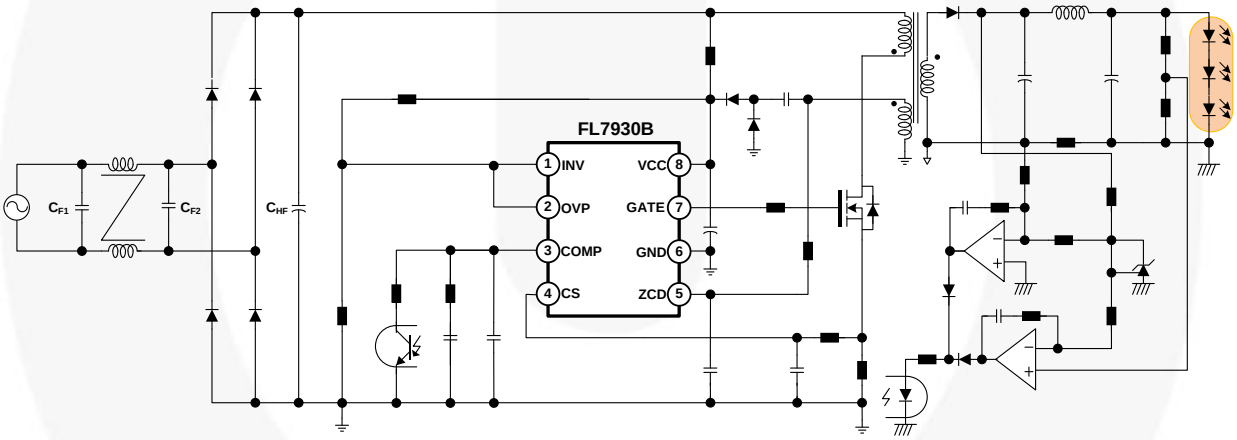

Figure 2. Typical Application of Single-Stage Flyback Converter

Internal Block Diagram

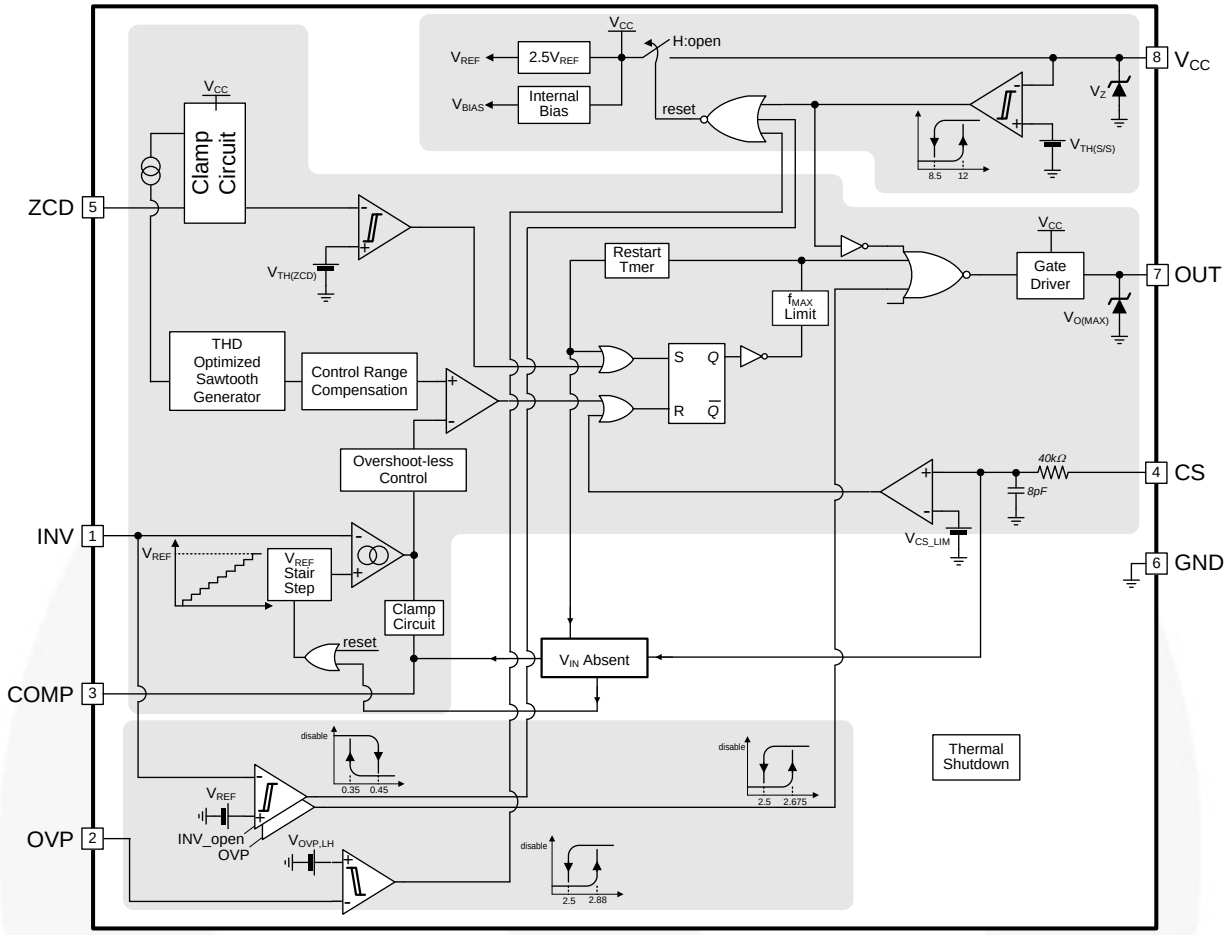

Figure 3. Functional Block Diagram

Pin Configuration

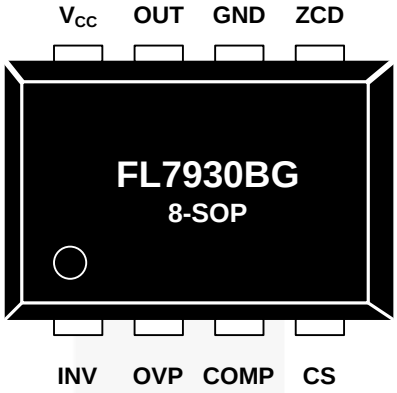

Figure 4. Pin Configuration (Top View)

Pin Definitions

Pin #	Name	Description
1	INV	This pin is the inverting input of the error amplifier. The output voltage of the boost PFC converter should be resistively divided to 2.5 V.
2	OVP	This pin is used to detect PFC output over voltage when INV pin information is not correct.
3	COMP	This pin is the output of the transconductance error amplifier. Components for the output voltage compensation should be connected between this pin and GND.
4	CS	This pin is the input of the over-current protection comparator. The MOSFET current is sensed using a sensing resistor and the resulting voltage is applied to this pin. An internal RC filter is included to filter switching noise.
5	ZCD	This pin is the input of the zero-current detection (ZCD) block. If the voltage of this pin goes higher than 1.5 V, then goes lower than 1.4 V, the MOSFET is turned on.
6	GND	This pin is used for the ground potential of all the pins. For proper operation, the signal ground and the power ground should be separated.
7	OUT	This pin is the gate drive output. The peak sourcing and sinking current levels are +500 mA and -800 mA, respectively. For proper operation, the stray inductance in the gate driving path must be minimized.
8	V_{CC}	This is the IC supply pin. IC current and MOSFET drive current are supplied using this pin.

Absolute Maximum Ratings

Stresses exceeding the absolute maximum ratings may damage the device. The device may not function or be operable above the recommended operating conditions and stressing the parts to these levels is not recommended. In addition, extended exposure to stresses above the recommended operating conditions may affect device reliability. The absolute maximum ratings are stress ratings only.

Symbol	Parameter		Min.	Max.	Unit
V_{CC}	Supply Voltage			V_Z	V
I_{OH}, I_{OL}	Peak Drive Output Current		-800	+500	mA
I_{CLAMP}	Driver Output Clamping Diodes $V_O>V_{CC}$ or $V_O<-0.3$ V		-10	+10	mA
I_{DET}	Detector Clamping Diodes		-10	+10	mA
V_{IN}	Error Amplifier Input, Output, OVP Input, ZCD, RDY, and OVP Pins(1)		-0.3	8.0	V
	CS Input Voltage(2)		-10.0	6.0	
T_J	Operating Junction Temperature			+150	°C
T_A	Operating Temperature Range		-40	+125	°C
T_{STG}	Storage Temperature Range		-65	+150	°C
ESD	Electrostatic Discharge Capability	Human Body Model, JESD22-A114		2.5	kV
		Charged Device Model, JESD22-C101		2.0	

Notes:
1. When this pin is supplied by external power sources by accident, its maximum allowable current is 50 mA.
2. In case of DC input, the acceptable input range is -0.3 V~6 V: within 100 ns -10 V~6 V is acceptable, but electrical specifications are not guaranteed during such a short time.

Thermal Impedance

Symbol	Parameter	Min.	Max.	Unit
Θ_{JA}	Thermal Resistance, Junction-to-Ambient(3)	150		°C/W

Note:
3. Regarding the test environment and PCB type, please refer to JESD51-2 and JESD51-10.

Electrical Characteristics

V_{CC} = 14 V and T_A = -40°C~+125°C, unless otherwise specified.

Symbol	Parameter	Conditions	Min.	Typ.	Max.	Unit
V_{CC} Section						
V_{START}	Start Threshold Voltage	V_{CC} Increasing	11	12	13	V
V_{STOP}	Stop Threshold Voltage	V_{CC} Decreasing	7.5	8.5	9.5	V
HY_{UVLO}	UVLO Hysteresis		3.0	3.5	4.0	V
V_Z	Zener Voltage	I_{CC}=20 mA	20	22	24	V
V_{OP}	Recommended Operating Range		13		20	V
Supply Current Section						
I_{START}	Startup Supply Current	V_{CC}=V_{START}-0.2 V		120	190	µA
I_{OP}	Operating Supply Current	Output Not Switching		1.5	3.0	mA
I_{DOP}	Dynamic Operating Supply Current	50 kHz, C_I=1 nF		2.5	4.0	mA
I_{OPDIS}	Operating Current at Disable	V_{INV}=0 V	90	160	230	µA
Error Amplifier Section						
V_{REF1}	Voltage Feedback Input Threshold1	T_A=25°C	2.465	2.500	2.535	V
ΔV_{REF1}	Line Regulation	V_{CC}=14 V~20 V		0.1	10.0	mV
ΔV_{REF2}	Temperature Stability of V_{REF1}(4)			20		mV
$I_{EA,BS}$	Input Bias Current	V_{INV}=1 V~4 V	-0.5		0.5	µA
$I_{EAS,SR}$	Output Source Current	V_{INV}=V_{REF} -0.1 V		-12		µA
$I_{EAS,SK}$	Output Sink Current	V_{INV}=V_{REF} +0.1 V		12		µA
V_{EAH}	Output Upper Clamp Voltage	V_{INV}=1 V, V_{CS}=0 V	6.0	6.5	7.0	V
V_{EAZ}	Zero Duty Cycle Output Voltage		0.9	1.0	1.1	V
g_m	Transconductance(4)		90	115	140	µmho
Maximum On-Time Section						
$t_{ON,MAX1}$	Maximum On-Time Programming 1	T_A=25°C, V_{ZCD}=1 V	35.5	41.5	47.5	µs
$t_{ON,MAX2}$	Maximum On-Time Programming 2	T_A=25°C, I_{ZCD}=0.469 mA	11.2	13.0	14.8	µs
Current-Sense Section						
V_{CS}	Current Sense Input Threshold Voltage Limit		0.7	0.8	0.9	V
$I_{CS,BS}$	Input Bias Current	V_{CS}=0~1 V	-1.0	-0.1	1.0	µA
$t_{CS,D}$	Current Sense Delay to Output(4)	dV/dt=1 V/100 ns, from 0 V to 5 V		350	500	ns

Continued on the following page…

Electrical Characteristics

V_{CC} = 14 V and T_A = -40°C~+125°C, unless otherwise specified.

Symbol	Parameter	Conditions	Min.	Typ.	Max.	Unit
Zero-Current Detect Section						
V_{ZCD}	Input Voltage Threshold(4)		1.35	1.50	1.65	V
HY_{ZCD}	Detect Hysteresis(4)		0.05	0.10	0.15	V
V_{CLAMPH}	Input High Clamp Voltage	I_{DET}=3 mA	5.5	6.2	7.5	V
V_{CLAMPL}	Input Low Clamp Voltage	I_{DET}=-3 mA	0	0.65	1.00	V
$I_{ZCD,BS}$	Input Bias Current	V_{ZCD}=1 V~5 V	-1.0	-0.1	1.0	µA
$I_{ZCD,SR}$	Source Current Capability(4)	T_A=25°C			-4	mA
$I_{ZCD,SK}$	Sink Current Capability(4)	T_A=25°C			10	mA
$t_{ZCD,D}$	Maximum Delay From ZCD to Output Turn-On(4)	dV/dt=-1 V/100 ns, from 5 V to 0 V	100		200	ns
Output Section						
V_{OH}	Output Voltage High	I_O=-100 mA, T_A=25°C	9.2	11.0	12.8	V
V_{OL}	Output Voltage Low	I_O=200 mA, T_A=25°C		1.0	2.5	V
t_{RISE}	Rising Time(4)	C_{IN}=1 nF		50	100	ns
t_{FALL}	Falling Time(4)	C_{IN}=1 nF		50	100	ns
$V_{O,MAX}$	Maximum Output Voltage	V_{CC}=20 V, I_O=100 µA	11.5	13.0	14.5	V
$V_{O,UVLO}$	Output Voltage with UVLO Activated	V_{CC}=5 V, I_O=100 µA			1	V
Restart / Maximum Switching Frequency Limit Section						
t_{RST}	Restart Timer Delay		50	150	300	µs
f_{MAX}	Maximum Switching Frequency(4)		250	300	350	kHz
Soft-Start Timer Section						
t_{SS}	Internal Soft-Soft(4)		3	5	7	ms
Protections						
$V_{OVP,INV}$	OVP Threshold Voltage at INV Pin	T_A=25°C	2.620	2.675	2.730	V
$HY_{OVP,INV}$	OVP Hysteresis at INV Pin	T_A=25°C	0.120	0.175	0.230	V
$V_{OVP,OVP}$	OVP Threshold Voltage at OVP Pin	T_A=25°C	2.740	2.845	2.960	V
$HY_{OVP,OVP}$	OVP Hysteresis at OVP Pin	T_A=25°C		0.345		V
V_{EN}	Enable Threshold Voltage		0.40	0.45	0.50	V
HY_{EN}	Enable Hysteresis		0.05	0.10	0.15	V
T_{SD}	Thermal Shutdown Temperature(4)		125	140	155	°C
T_{HYS}	Hysteresis Temperature of TSD(4)			60		°C

Note:

4. These parameters, although guaranteed by design, are not production tested.

Comparison of FL6961 and FL7930B

Function	FL6961	FL7930B	FL7930B Advantages
OVP Pin	None	Integrated	▪ No External Circuit for additional OVP ▪ Reduction of Power Loss and BOM Cost Caused by Additional OVP Circuit
Frequency Limit	None	Integrated	▪ Abnormal CCM Operation Prohibited ▪ Abnormal Inductor Current Accumulation Can Be Prohibited
V_{IN}-Absent Detection	None	Integrated	▪ Increase System Reliability by Testing for Input Supply Voltage ▪ Guarantee Stable Operation at Short Electric Power Failure
Soft-Start and Startup without Overshoot	None	Integrated	▪ Reduce Voltage and Current Stress at Startup ▪ Eliminate Audible Noise Due to Unwanted OVP Triggering
Control Range Compensation	None	Integrated	▪ Can Avoid Burst Operation at Light Load and High Input Voltage ▪ Reduce Probability of Audible Noise Due to Burst Operation
THD Optimizer	External	Internal	▪ No External Resistor is Needed
TSD	None	140°C with 60°C Hysteresis	▪ Stable and Reliable TSD Operation ▪ Converter Temperature Range Limited Range
Control Range Compensation	None	Integrated	

Comparison of FL7930B and FL7930C

Function	FL7930B	FL7930C	FL7930B Remark
RDY Pin	None	Integrated	▪ User Choice for the Use of Number #2 Pin
OVP Pin	Integrated	None	

Typical Performance Characteristics

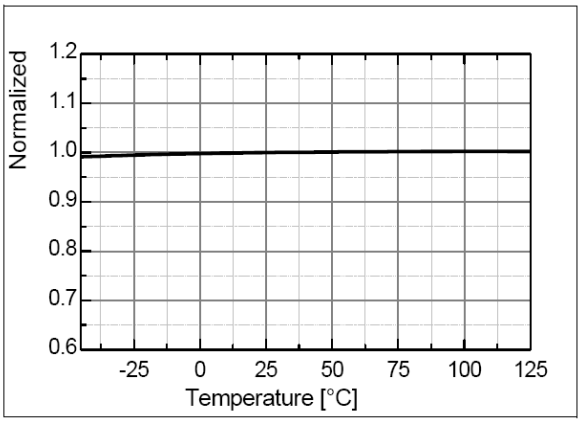

Figure 5. Voltage Feedback Input Threshold 1 (V_{REF1}) vs. T_A

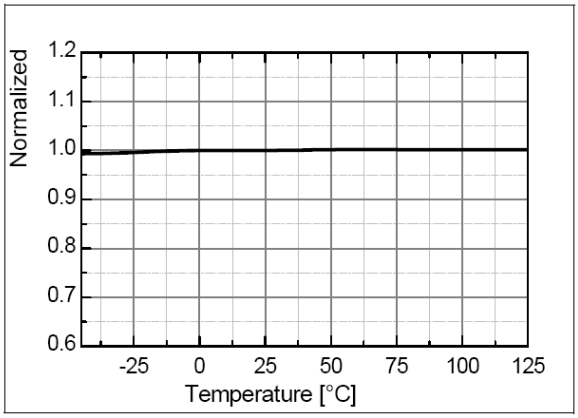

Figure 6. Start Threshold Voltage (V_{START}) vs. T_A

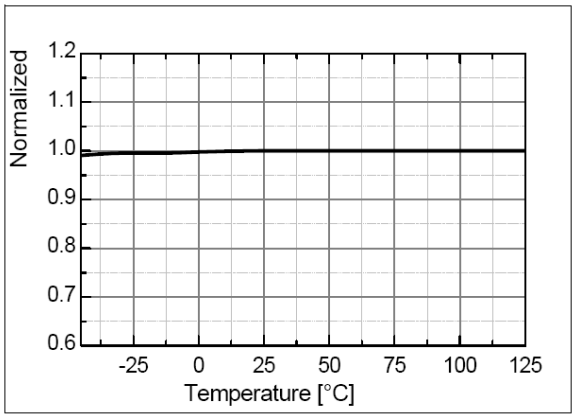

Figure 7. Stop Threshold Voltage (V_{STOP}) vs. T_A

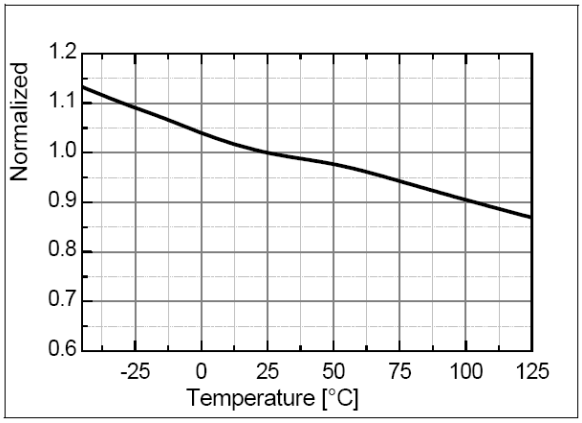

Figure 8. Startup Supply Current (I_{START}) vs. T_A

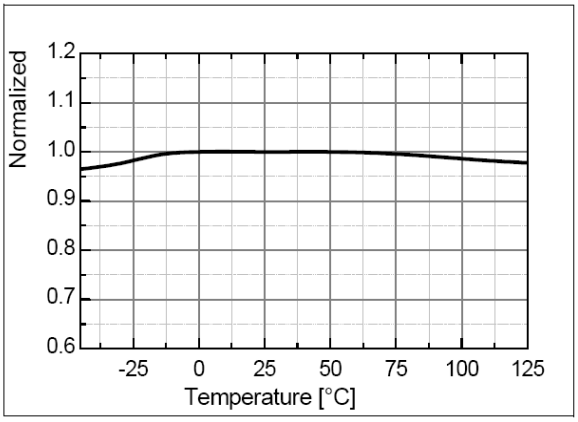

Figure 9. Operating Supply Current (I_{OP}) vs. T_A

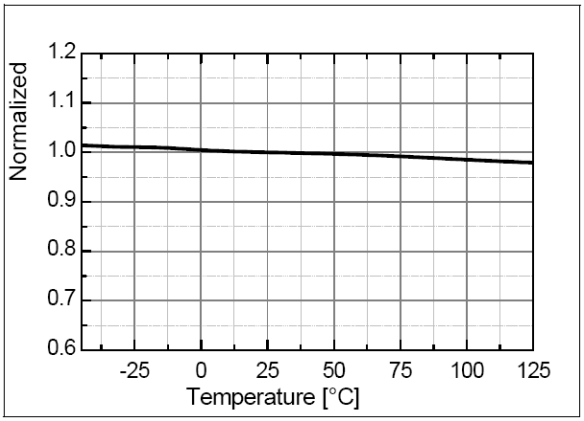

Figure 10. Output Upper Clamp Voltage (V_{EAH}) vs. T_A

Typical Performance Characteristics

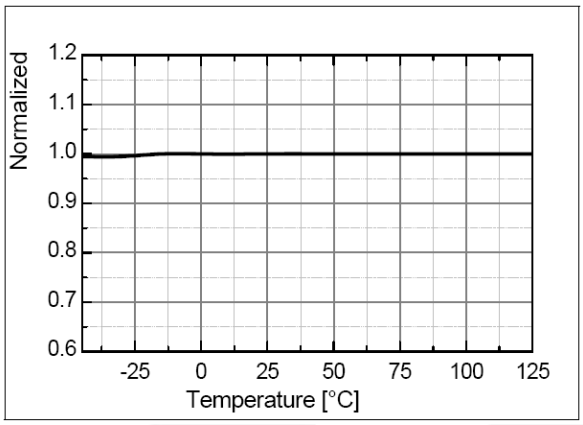

Figure 11. Zero Duty Cycle Output Voltage (V_{EAZ}) vs. T_A

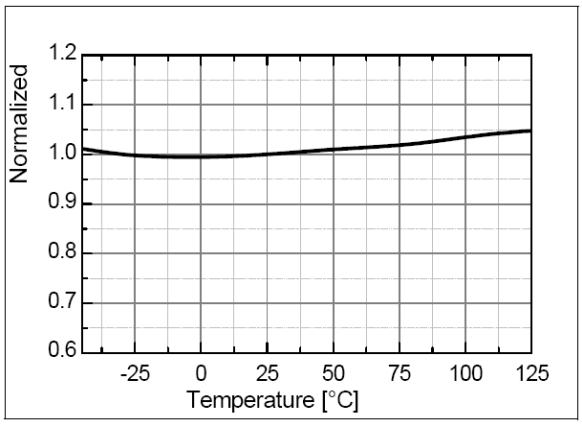

Figure 12. Maximum On-Time Program 1 ($t_{ON,MAX1}$) vs. T_A

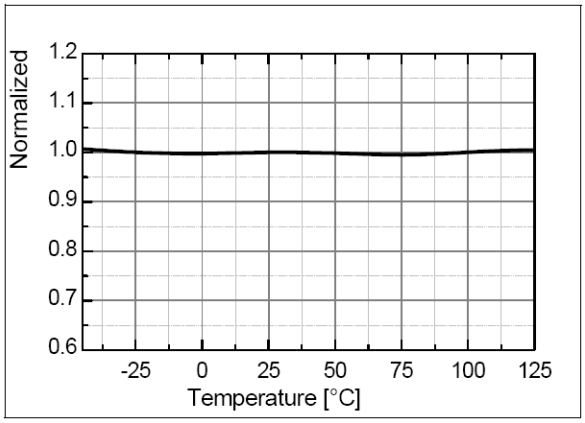

Figure 13.Maximum On-Time Program 2 ($t_{ON,MAX2}$) vs. T_A

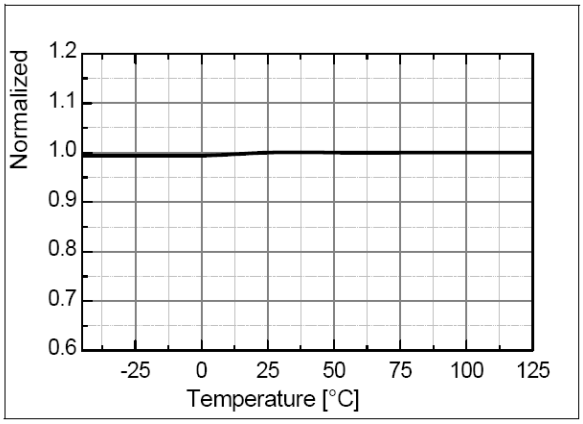

Figure 14. Current-Sense Input Threshold Voltage Limit (V_{CS}) vs. T_A

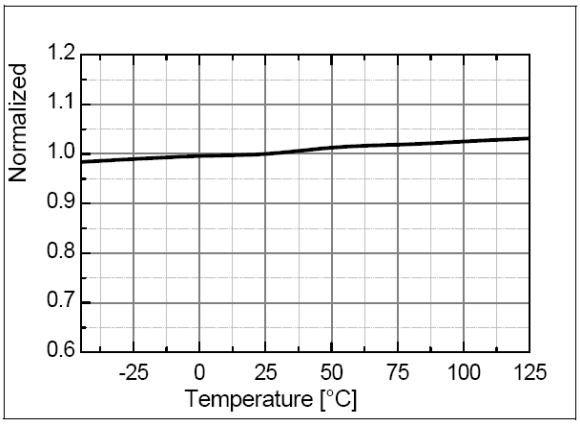

Figure 15. Input High Clamp Voltage (V_{CLAMPH}) vs. T_A

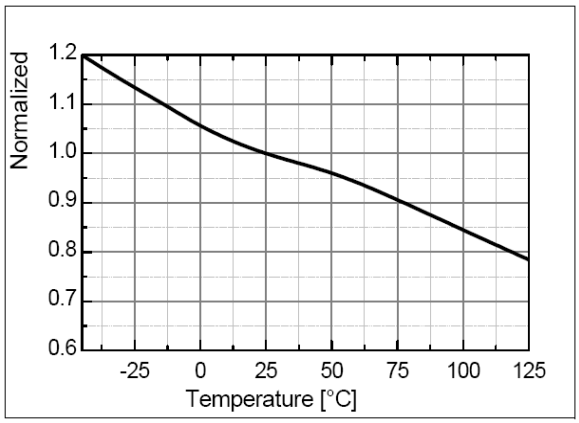

Figure 16. Input Low Clamp Voltage (V_{CLAMPL}) vs. T_A

Typical Performance Characteristics

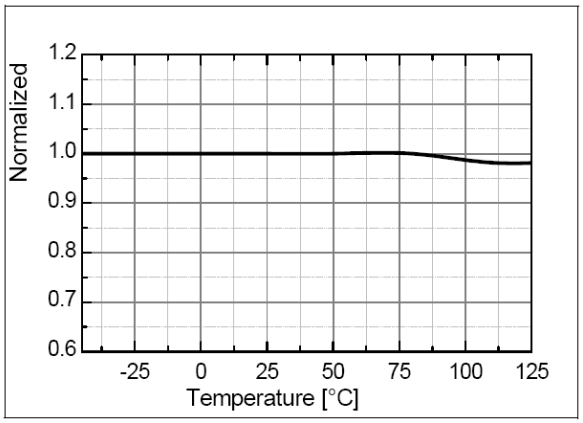

Figure 17. Output Voltage High (V_{OH}) vs. T_A

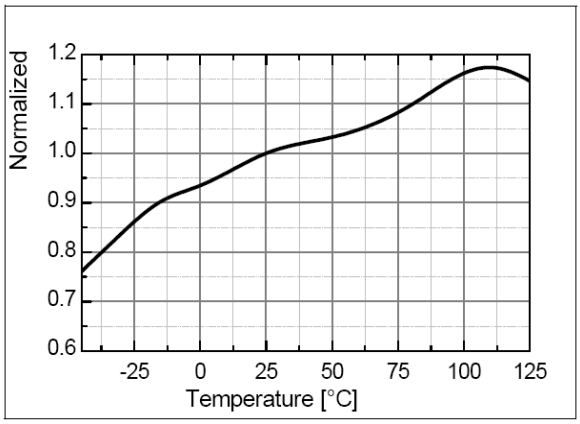

Figure 18. Output Voltage Low (V_{OL}) vs. T_A

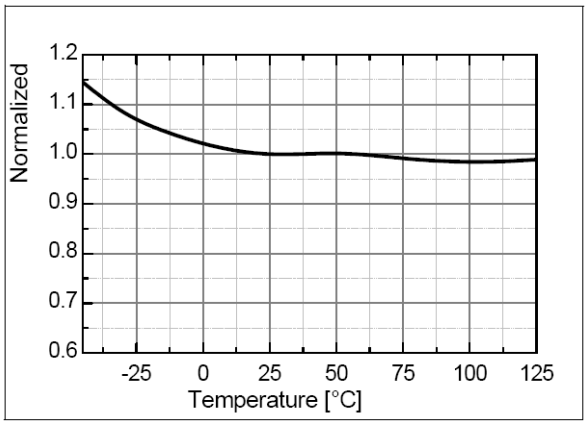

Figure 19. Restart Timer Delay (t_{RST}) vs. T_A

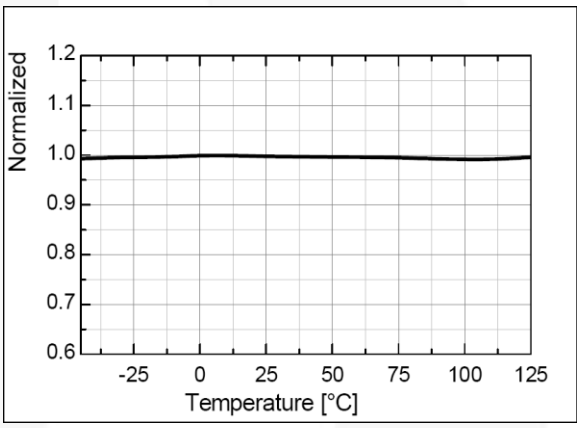

Figure 20. OVP Threshold at OVP Pin ($V_{OVP,OVP}$) vs. T_A

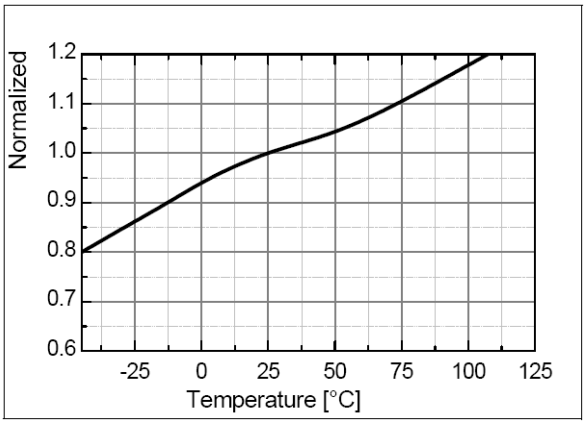

Figure 21. Output Saturation Voltage ($V_{RDY,SAT}$) vs. T_A

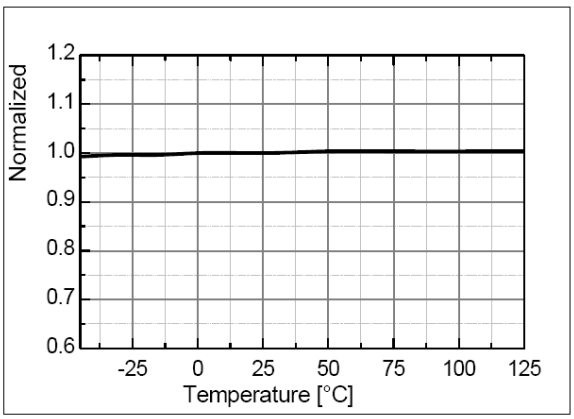

Figure 22. OVP Threshold Voltage (V_{OVP}) vs. T_A

Applications Information

1. Startup: Normally, supply voltage (V_{CC}) of a PFC block is fed from the additional power supply, which can be called standby power. Without this standby power, auxiliary winding for zero current detection can be used as a supply source. Once the supply voltage of the PFC block exceeds 12 V, internal operation is enabled until the voltage drops to 8.5 V. If V_{CC} exceeds V_Z, 20 mA current is sinking from V_{CC}.

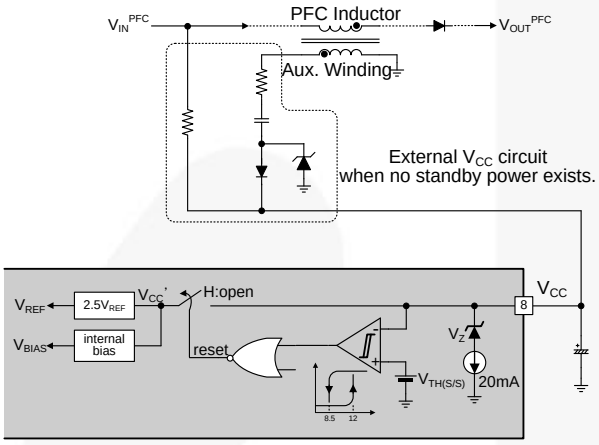

Figure 23. Startup Circuit

2. INV Block: Scaled-down voltage from the output is the input for the INV pin. Many functions are embedded based on the INV pin: transconductance amplifier, output OVP comparator, and disable comparator.

For the output voltage control, a transconductance amplifier is used instead of the conventional voltage amplifier. The transconductance amplifier (voltage-controlled current source) aids the implementation of the OVP and disable functions. The output current of the amplifier changes according to the voltage difference of the inverting and non-inverting input of the amplifier. To cancel down the line input voltage effect on power factor correction, the effective control response of the PFC block should be slower than the line frequency and this conflicts with the transient response of the controller. Two-pole one-zero type compensation can meet both requirements.

The OVP comparator shuts down the output drive block when the voltage of the INV pin is higher than 2.675 V and there is 0.175 V hysteresis. The disable comparator disables operation when the voltage of the inverting input is lower than 0.35 V and there is 100 mV hysteresis. An external small-signal MOSFET can be used to disable the IC, as shown in Figure 24. The IC operating current decreases to reduce power consumption if the IC is disabled. Figure 25 is the timing chart of the internal circuit near the INV pin when rated PFC output voltage is 390 V_{DC} and V_{CC} supply voltage is 15 V.

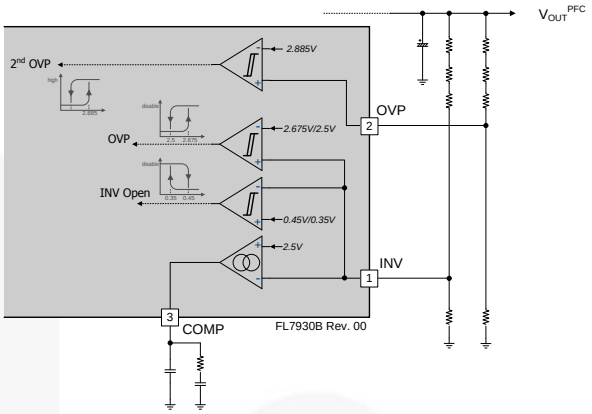

Figure 24. Circuit Around INV Pin

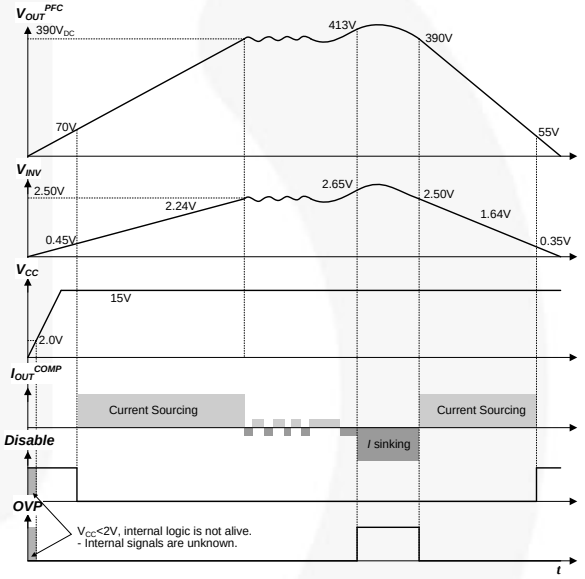

Figure 25. Timing Chart for INV Block

3. OVP Pin: Over-Voltage Protection (OVP) is embedded by the information at the INV pin. That information comes from the output through the voltage dividing resistors. To scale down from a high voltage to a low one, high resistance is normally used with low resistance. If the resistor of high resistance gets damaged and resistance is changed to high, though INV pin information is normal, output voltage exceeds its rated output. If this occurs, the output electrolytic capacitor may be damaged. To prevent such a catastrophe additional OVP pin is assigned to double-check output voltage. Additional OVP may be called "second" OVP, while INV pin OVP is called "first" OVP. Since the two OVP conditions are quite different, the protection recovering mode is different.

Once the first OVP triggers, switching stops immediately and recovers switching when the output voltage is decreased with a hysteresis. When the second OVP triggers, switching can be recovered only when the V_{CC} supply voltage falls below V_{STOP} and builds up higher than V_{START} again and V_{OVP} should be lower than hysteresis. If the second OVP is not used, the OVP pin must be connected to the INV pin or to the ground.

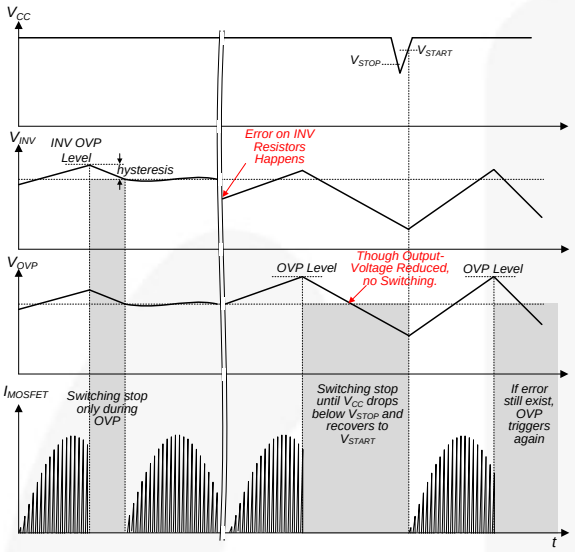

Figure 26. Comparison of First and Second OVP Recovery Modes

4. Control Range Compensation: On time is controlled by the output voltage compensator with FL7930B. Due to this when input voltage is high and load is light, control range becomes narrow compared to when input voltage is low. That control range decrease is inversely proportional to the double square of the input voltage ($\text{control range} \propto \frac{1}{\text{input voltage}^2}$). Thus at high line, unwanted burst operation easily happens at light load and audible noise may be generated from the boost inductor or inductor at input filter. Different from the other converters, burst operation in PFC block is not needed because the PFC block itself is normally disabled during standby mode. To reduce unwanted burst operation at light load, an internal control range compensation function is implemented and shows no burst operation until 5% load at high line.

5. Zero-Current Detection: Zero-current detection (ZCD) generates the turn-on signal of the MOSFET when the boost inductor current reaches zero using an auxiliary winding coupled with the inductor. When the power switch turns on, negative voltage is induced at the auxiliary winding due to the opposite winding direction (*see Equation 1*). Positive voltage is induced *(see Equation 2)* when the power switch turns off:

$$V_{AUX} = -\frac{T_{AUX}}{T_{IND}} \cdot V_{AC} \quad (1)$$

$$V_{AUX} = \frac{T_{AUX}}{T_{IND}} \cdot (V_{PFCOUT} - V_{AC}) \quad (2)$$

where, V_{AUX} is the auxiliary winding voltage; T_{IND} and T_{AUX} are boost inductor turns and auxiliary winding turns, respectively; V_{AC} is input voltage for PFC converter; and V_{OUT_PFC} is output voltage from the PFC converter.

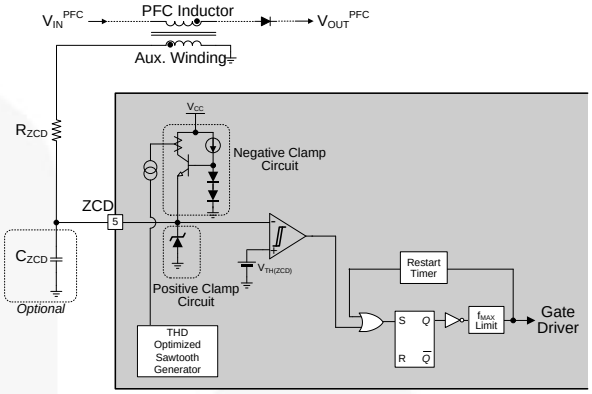

Figure 27. Circuit Near ZCD

Because auxiliary winding voltage can swing from negative to positive voltage, the internal block in ZCD pin has both positive and negative voltage clamping circuits. When the auxiliary voltage is negative, an internal circuit clamps the negative voltage at the ZCD pin around 0.65 V by sourcing current to the serial resistor between the ZCD pin and the auxiliary winding. When the auxiliary voltage is higher than 6.5 V, current is sinked through a resistor from the auxiliary winding to the ZCD pin.

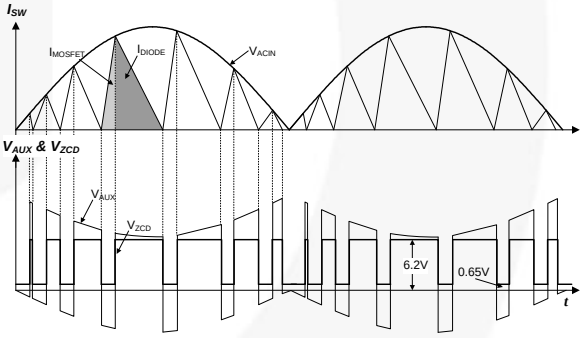

Figure 28. Auxiliary Voltage Depends on MOSFET Switching

The auxiliary winding voltage is used to check the boost inductor current zero instance. When boost inductor current becomes zero, there is a resonance between boost inductor and all capacitors at the MOSFET drain pin, including C_{OSS} of the MOSFET; an external capacitor at the D-S pin to reduce the voltage rising and falling slope of the MOSFET; a parasitic capacitor at inductor; and so on to improve performance. Resonated voltage is reflected to the auxiliary winding and can be used for detecting zero current of boost inductor and valley position of MOSFET voltage stress. For valley detection, a minor delay by the resistor and capacitor is needed. A capacitor increases the noise immunity at the ZCD pin. If ZCD voltage is higher than 1.5 V, an internal ZCD comparator output becomes HIGH and LOW when the ZCD goes below 1.4 V. At the falling edge of comparator output, internal logic turns on the MOSFET.

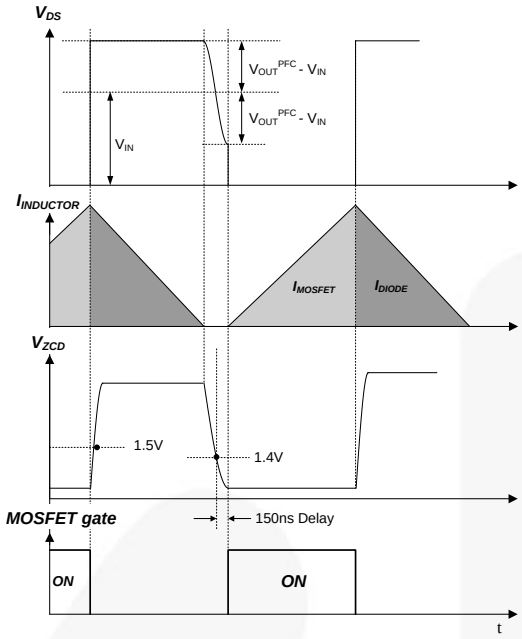

Figure 29. Auxiliary Voltage Threshold

When no ZCD signal is available, the PFC controller cannot turn on the MOSFET, so the controller checks every switching off time and forces MOSFET turn on when the off time is longer than 150 µs. This restart timer triggers MOSFET turn-on at startup and may be used at the input voltage zero cross period.

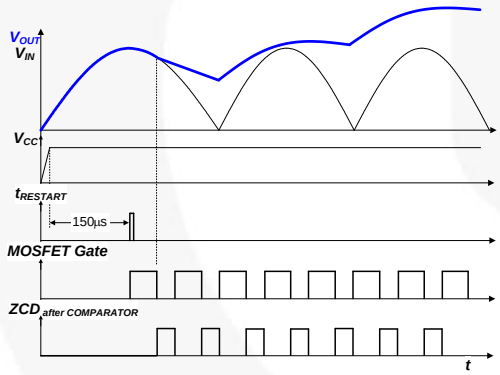

Figure 30. Restart Timer at Startup

Because the MOSFET turn-on depends on the ZCD input, switching frequency may increase to higher than several megahertz due to the mis-triggering or noise on the nearby ZCD pin. If the switching frequency is higher than needed for critical conduction mode (CRM), operation mode shifts to continuous conduction mode (CCM). In CCM, unlike CRM where the boost inductor current is reset to zero at the next switch on; inductor current builds up at every switching cycle and can be raised to very high current that exceeds the current rating of the power switch or diode. This can seriously damage the power switch. To avoid this, maximum switching frequency limitation is embedded. If ZCD signal is applied again within 3.3 µs after the previous rising edge of gate signal, this signal is ignored internally and FL7930B waits for another ZCD signal. This slightly degrades the power factor performance at light load and high input voltage.

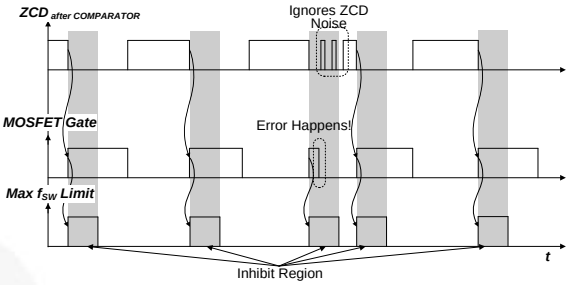

Figure 31. Maximum Switching Frequency Limit Operation

6. Control: The scaled output is compared with the internal reference voltage and sinking or sourcing current is generated from the COMP pin by the transconductance amplifier. The error amplifier output is compared with the internal sawtooth waveform to give proper turn-on time based on the controller.

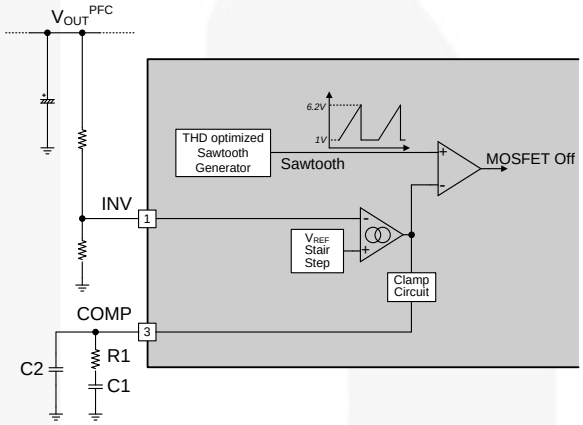

Figure 32. Control Circuit

Unlike a conventional voltage-mode PWM controller, FL7930B turns on the MOSFET at the falling edge of ZCD signal. The "ON" instant is determined by the external signal and the turn-on time lasts until the error amplifier output (V_{COMP}) and sawtooth waveform meet. When load is heavy, output voltage decreases, scaled output decreases, COMP voltage increases to compensate low output, turn-on time lengthens to give more inductor turn-on time, and increased inductor current raises the output voltage. This is how a PFC negative feedback controller regulates output.

The maximum of V_{COMP} is limited to 6.5 V, which dictates the maximum turn-on time. Switching stops when V_{COMP} is lower than 1.0 V.

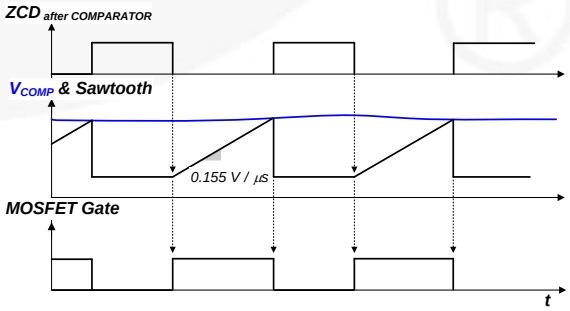

Figure 33. Turn-On Time Determination

The roles of PFC controller are regulating output voltage and input current shaping to increase power factor. Duty control based on the output voltage should be fast enough to compensate output voltage dip or overshoot. For the power factor, however, the control loop must not react to the fluctuating AC input voltage. These two requirements conflict; therefore, when designing a feedback loop, the feedback loop should be least ten times slower than AC line frequency. That slow response is made by C1 at the compensator. R1 makes gain boost around operation region and C2 attenuates gain at higher frequency. Boost gain by R1 helps raise the response time and improves phase margin.

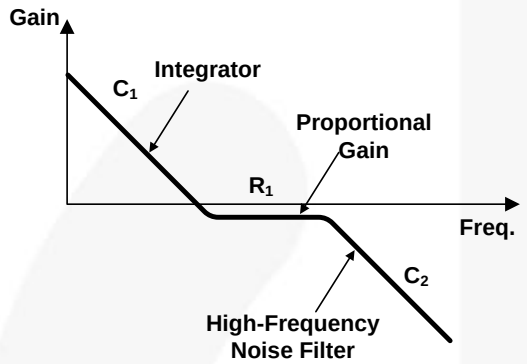

Figure 34. Compensators Gain Curve

For the transconductance error amplifier side, gain changes based on differential input. When the error is large, gain is large to suppress the output dip or peak quickly. When the error is small, low gain is used to improve power factor performance.

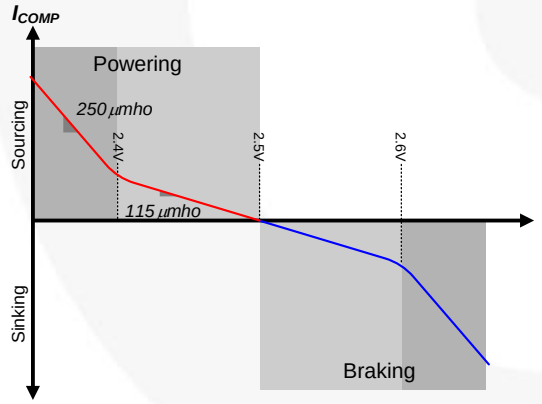

Figure 35. Gain Characteristic

7. Soft-Start: When V_{CC} reaches V_{START}, the internal reference voltage is increased like a stair step for 5 ms. As a result, V_{COMP} is also raised gradually and MOSFET turn-on time increases smoothly. This reduces voltage and current stress on the power switch during startup.

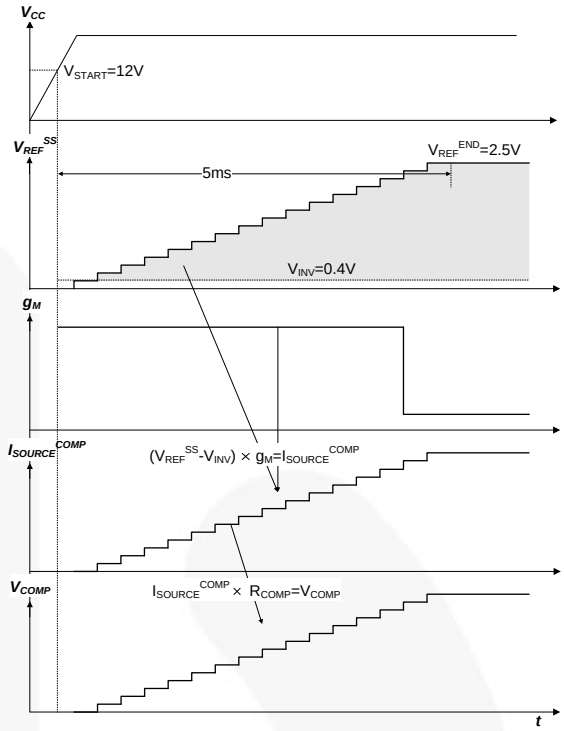

Figure 36. Soft-Start Sequence

8. Startup without Overshoot: Feedback control speed of PFC is quite slow. Due to the slow response, there is a gap between output voltage and feedback control. That is why over-voltage protection (OVP) is critical at the PFC controller and voltage dip caused by fast load changes from light to heavy is diminished by a bulk capacitor. OVP can be triggered during startup phase. Operation on and off by OVP at startup may cause audible noise and can increase voltage stress at startup, which is normally higher than in normal operation. This operation is improved when soft start time is very long. However, too much startup time enlarges the output voltage building time at light load. FL7930B has overshoot protection at startup. During startup, the feedback loop is controlled by an internal proportional gain controller and when the output voltage reaches the rated value, it switches to an external compensator after a transition time of 30 ms. This internal proportional gain controller eliminates overshoot at startup and an external conventional compensator takes over successfully afterward.

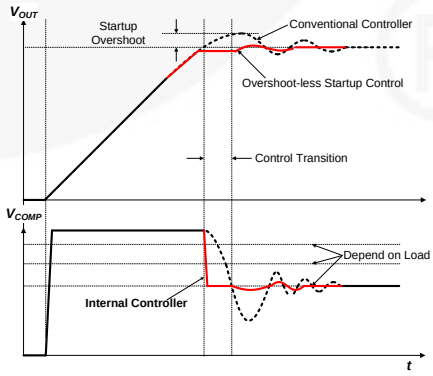

Figure 37. Startup without Overshoot

9. THD Optimization: Total harmonic distortion (THD) is the factor that dictates how closely input current shape matches sinusoidal form. The turn-on time of the PFC controller is almost constant over one AC line period due to the extremely low feedback control response. The turn-off time is determined by the current decrease slope of the boost inductor made by the input voltage and output voltage. Once inductor current becomes zero, resonance between C_{OSS} and the boost inductor makes oscillating waveforms at the drain pin and auxiliary winding. By checking the auxiliary winding voltage through the ZCD pin, the controller can check the zero current of boost inductor. At the same time, a minor delay is inserted to determine the valley position of drain voltage. The input and output voltage difference is at its maximum at the zero cross point of AC input voltage. The current decrease slope is steep near the zero cross region and more negative inductor current flows during a drain voltage valley detection time. Such a negative inductor current cancels down the positive current flows and input current becomes zero, called "zero-cross distortion" in PFC.

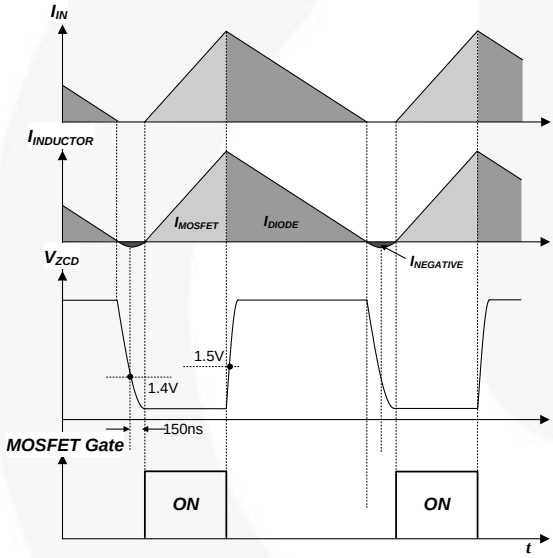

Figure 38. Input and Output Current Near Input Voltage Peak

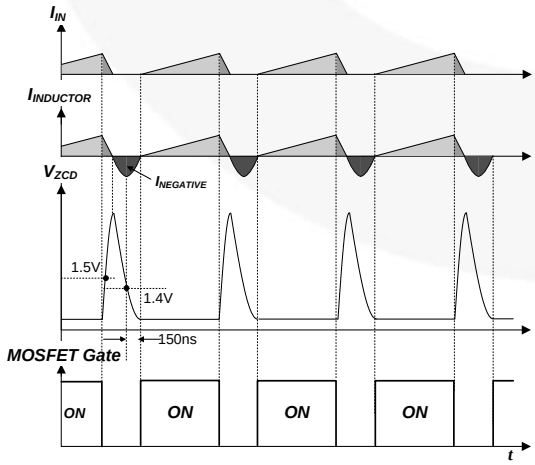

Figure 39. Input and Output Current Near Input Voltage Peak Zero Cross

To improve this, lengthened turn-on time near the zero cross region is a well-known technique, though the method may vary and may be proprietary. FL7930B optimizes this by sourcing current through the ZCD pin. Auxiliary winding voltage becomes negative when the MOSFET turns on and is proportional to input voltage. The negative clamping circuit of ZCD outputs the current to maintain the ZCD voltage at a fixed value. The sourcing current from the ZCD is directly proportional to the input voltage. Some portion of this current is applied to the internal sawtooth generator together with a fixed-current source. Theoretically the fixed-current source and the capacitor at sawtooth generator determine the maximum turn-on time when no current is sourcing at ZCD clamp circuit and available turn-on time gets shorter proportional to the ZCD sourcing current.

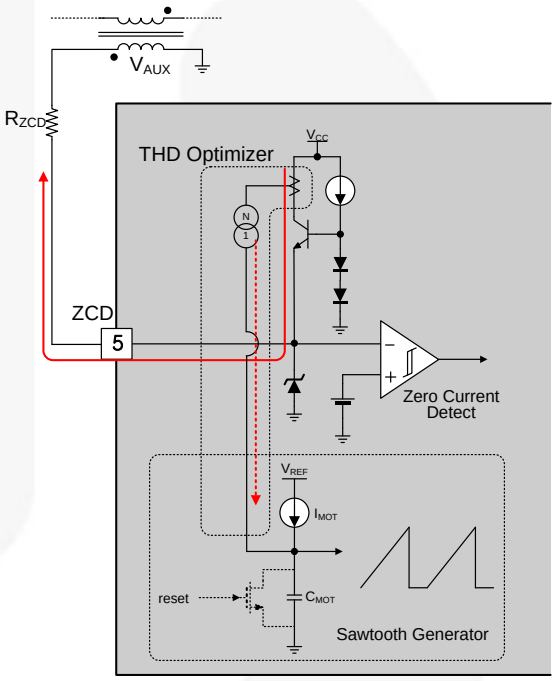

Figure 40. Circuit of THD Optimizer

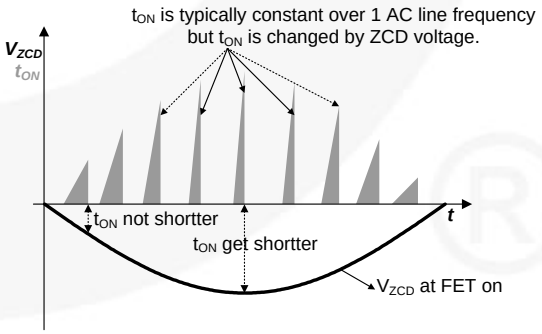

Figure 41. Effect of THD Optimizer

By THD optimizer, turn-on time over one AC line period is proportionally changed, depending on input voltage. Near zero cross, lengthened turn-on time improves THD performance.

10. V_{IN}-Absent Detection: To reduce power loss caused by input voltage sensing resistors and to optimize THD, the FL7930B omits AC input voltage detection. Therefore, no information about AC input is available from the internal controller. In many cases, the V_{CC} of PFC controller is supplied by an independent power source like standby power. In this scheme, some mismatch may exist. For example, when the electric power is suddenly interrupted during two or three AC line periods; V_{CC} is still live during that time, but output voltage drops because there is no input power source. Consequently, the control loop tries to compensate for the output voltage drop and V_{COMP} reaches its maximum. This lasts until AC input voltage is live again. When AC input voltage is live again, high V_{COMP} allows high switching current and more stress is put on the MOSFET and diode. To protect against this, FL7930B checks if the input AC voltage exists. If input does not exist, soft-start is reset and waits until AC input is live again. Soft-start manages the turn-on time for smooth operation when it detects AC input is applied again and applies less voltage and current stress on startup.

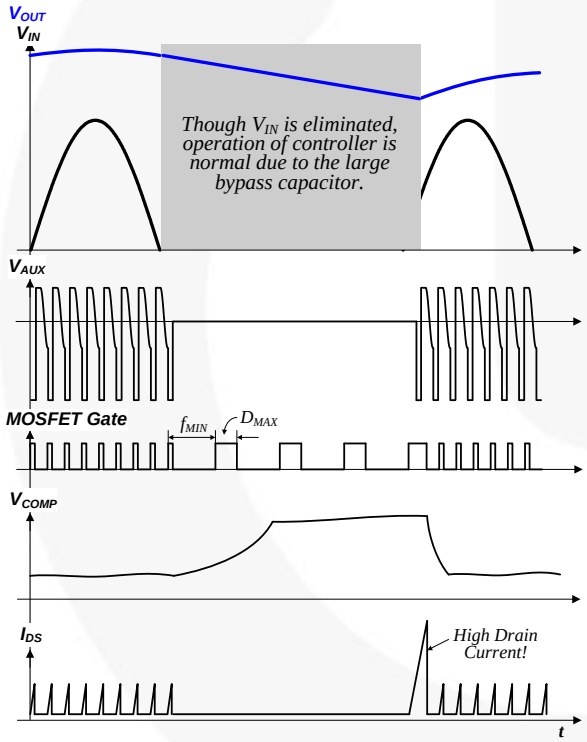

Figure 42. Without V_{IN}-Absent Circuit

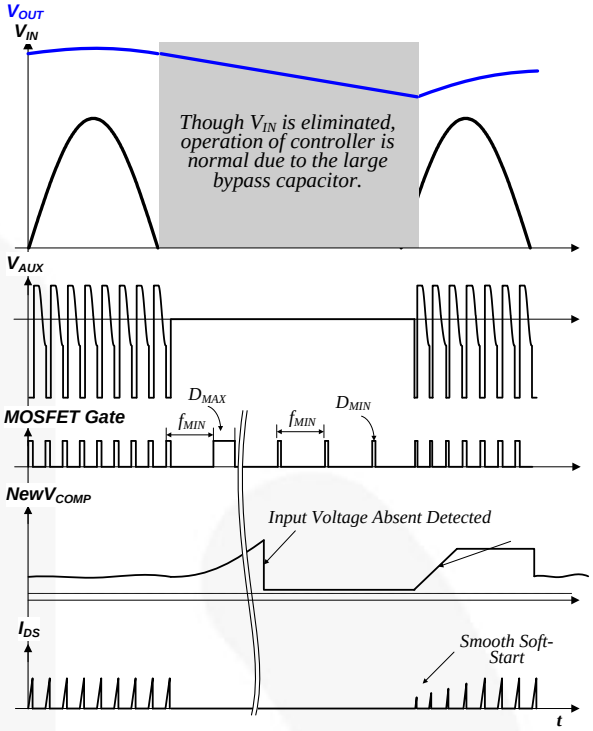

Figure 43. With V_{IN}-Absent Circuit

11. Current Sense: The MOSFET current is sensed using an external sensing resistor for over-current protection. If the CS pin voltage is higher than 0.8 V, the over-current protection comparator generates a protection signal. An internal RC filter of 40 kΩ and 8 pF is included to filter switching noise.

12. Gate Driver Output: FL7930B contains a single totem-pole output stage designed for a direct drive of the power MOSFET. The drive output is capable of up to +500 / -800 mA peak current with a typical rise and fall time of 50 ns with 1 nF load. The output voltage is clamped to 13 V to protect the MOSFET gate even if the V_{CC} voltage is higher than 13 V.

PCB Layout Guide

PFC block normally handles high switching current and the voltage low-energy signal path can be affected by the high-energy path. Cautious PCB layout is mandatory for stable operation.

1. The gate drive path should be as short as possible. The closed-loop that starts from the gate driver, MOSFET gate, and MOSFET source to ground of PFC controller should be as close as possible. This is also crossing point between power ground and signal ground. Power ground path from the bridge diode to the output bulk capacitor should be short and wide. The sharing position between power ground and signal ground should be only at one position to avoid ground loop noise. Signal path of the PFC controller should be short and wide for external components to contact.
2. The PFC output voltage sensing resistor is normally high to reduce current consumption. This path can be affected by external noise. To reduce noise potential at the INV pin, a shorter path for output sensing is recommended. If a shorter path is not possible, place some dividing resistors between PFC output and the INV pin — closer to the INV pin is better. Relative high voltage close to the INV pin can be helpful.
3. The ZCD path is recommended close to auxiliary winding from boost inductor and to the ZCD pin. If that is difficult, place a small capacitor (below 50 pF) to reduce noise.
4. The switching current sense path should not share with another path to avoid interference. Some additional components may be needed to reduce the noise level applied to the CS pin.
5. A stabilizing capacitor for V_{CC} is recommended as close as possible to the V_{CC} and ground pins. If it is difficult, place the SMD capacitor as close to the corresponding pins as possible.

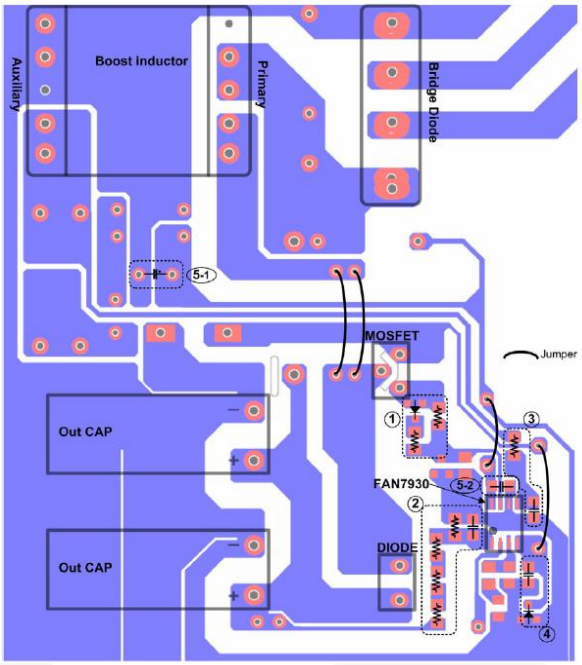

Figure 44. Recommended PCB Layout

Typical Application Circuit

Application	Device	Input Voltage Range	Rated Output Power	Output Voltage (Maximum Current)
LED Lighting	FL7930B	90-265 V_{AC}	195 W	390 V (0.5 A)

Features

- Average efficiency of 25%, 50%, 75%, and 100% load conditions is higher than 95% at universal input.
- Power factor at rated load is higher than 0.98 at universal input.
- Total Harmonic Distortion (THD) at rated load is lower than 15% at universal input.

Key Design Notes

- When auxiliary V_{CC} supply is not available, V_{CC} power can be supplied through Zero Current Detect (ZCD) winding. The power consumption of R103 is quite high, so its power rating needs checking.
- Because the input bias current of INV pin is almost zero, output voltage sensing resistors (R112~R115) should be as high as possible. However, too-high resistance makes the node susceptible to noise. Resistor values need to strike a balance between power consumption and noise immunity.
- Quick charge diode (D106) can be eliminated if output diode inrush current capability is sufficient. Through D106, system operation is normal due to the controller's highly reliable protection features.

Schematic

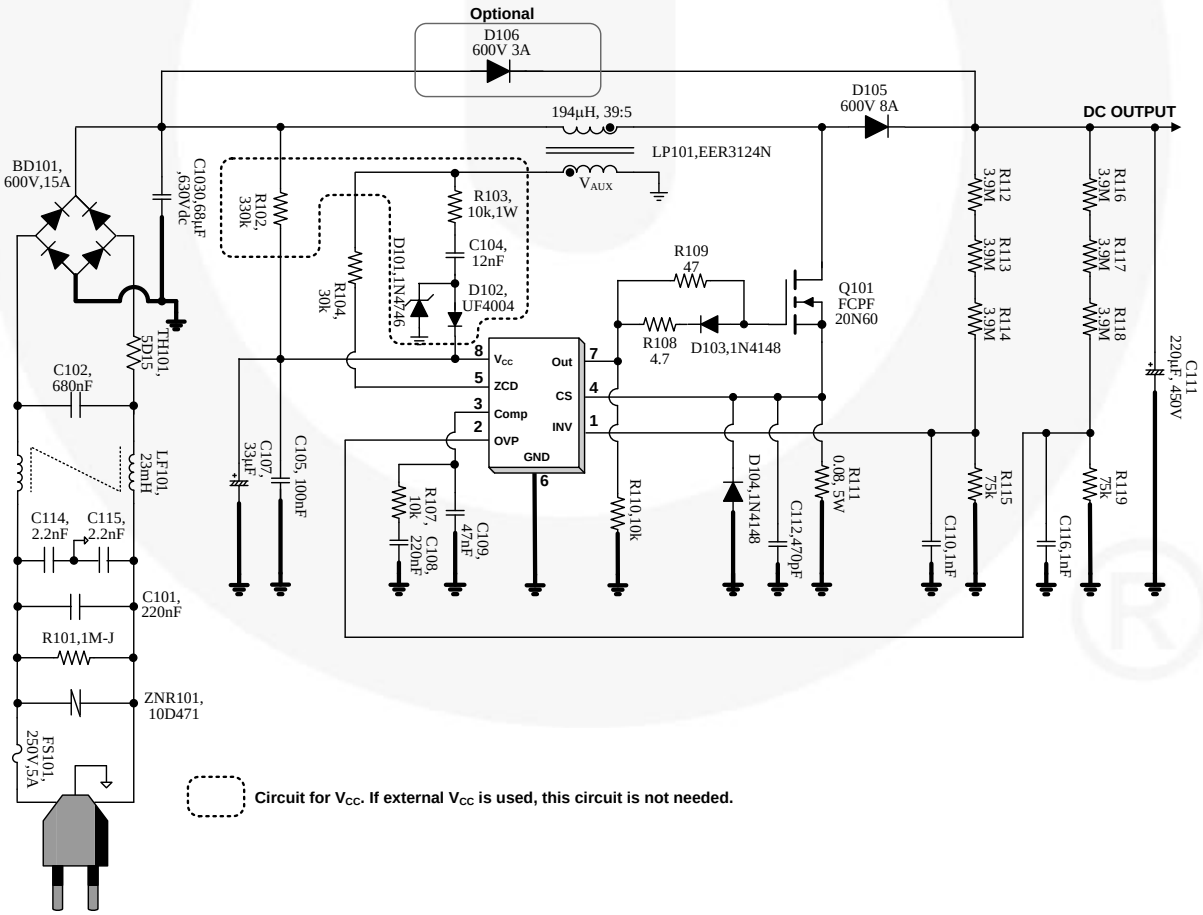

Figure 45. Demonstration Circuit

Transformer

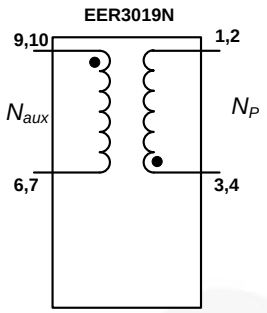

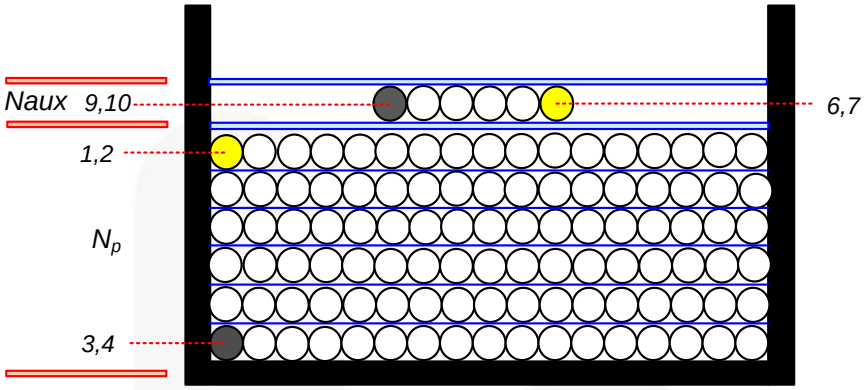

Figure 46. Transformer Schematic Diagram

Winding Specifications

Position	No	Pin (S → F)	Wire	Turns	Winding Method
Bottom	N_p	3, 4 → 1, 2	0.1φ×50	39	Solenoid Winding
	Insulation: Polyester Tape t = 0.05mm, 3 Layers				
Top	N_{AUX}	9,10 → 6,7	0.3φ	5	Solenoid Winding
	Insulation: Polyester Tape t = 0.05 mm, 4 Layers				

Electrical Characteristics

	Pin	Specification	Remark
Inductance	3, 4 → 1, 2	194 μH ± 5%	100 kHz, 1 V

Core & Bobbin

Core: EER3019, Samhwa (PL-7) (Ae=137.0mm^2)

Bobbin: EER3019

Bill of Materials

Part #	Value	Note	Part #	Value	Note
Resistor			**Switch**		
R101	1 MΩ	1W	Q101	FCPF20N60	20 A, 600 V, SuperFET®
R102	330 kΩ	1/2W	Diode		
R103	10 kΩ	1W	D101	1N4746	1 W, 18 V, Zener Diode
R104	30 kΩ	1/4W	D102	UF4004	1 A, 400 V Glass Passivated High-Efficiency Rectifier
R107	10 kΩ	1/4W	D103	1N4148	1 A, 100 V Small-Signal Diode
R108	4.7 kΩ	1/4W	D104	1N4148	1 A, 100 V Small-Signal Diode
R109	47 kΩ	1/4W	D105		8 A, 600 V, General-Purpose Rectifier
R110	10 kΩ	1/4W	D106		3 A, 600 V, General-Purpose Rectifier
R111	0.80 kΩ	5W			
R112, 113, 114,116,117,118	3.9 kΩ	1/4W	IC101	FL7930B	CRM PFC Controller
R115,119	75 kΩ	1/4W			
Capacitor			**Fuse**		
C101	220 nF / 275 V_{AC}	Box Capacitor	FS101	5 A / 250 V	
C102	680 nF / 275 V_{AC}	Box Capacitor	**NTC**		
C103	0.68 µF / 630 V	Box Capacitor	TH101	5D-15	
C104	12 nF / 50 V	Ceramic Capacitor	**Bridge Diode**		
C105	100 nF / 50 V	SMD (1206)	BD101		15 A, 600 V
C107	33 µF / 50 V	Electrolytic Capacitor	**Line Filter**		
C108	220 nF / 50 V	Ceramic Capacitor	LF101	23 mH	
C109	47 nF / 50 V	Ceramic Capacitor	**Transformer**		
C110,116	1 nF / 50 V	Ceramic Capacitor	T1	EER3019	Ae=137.0 mm^2
C112	47 nF / 50 V	Ceramic Capacitor	**ZNR**		
C111	220 µF / 450 V	Electrolytic Capacitor	ZNR101	10D471	
C114	2.2 nF / 450 V	Box Capacitor			
C115	2.2 nF / 450 V	Box Capacitor			

Physical Dimensions

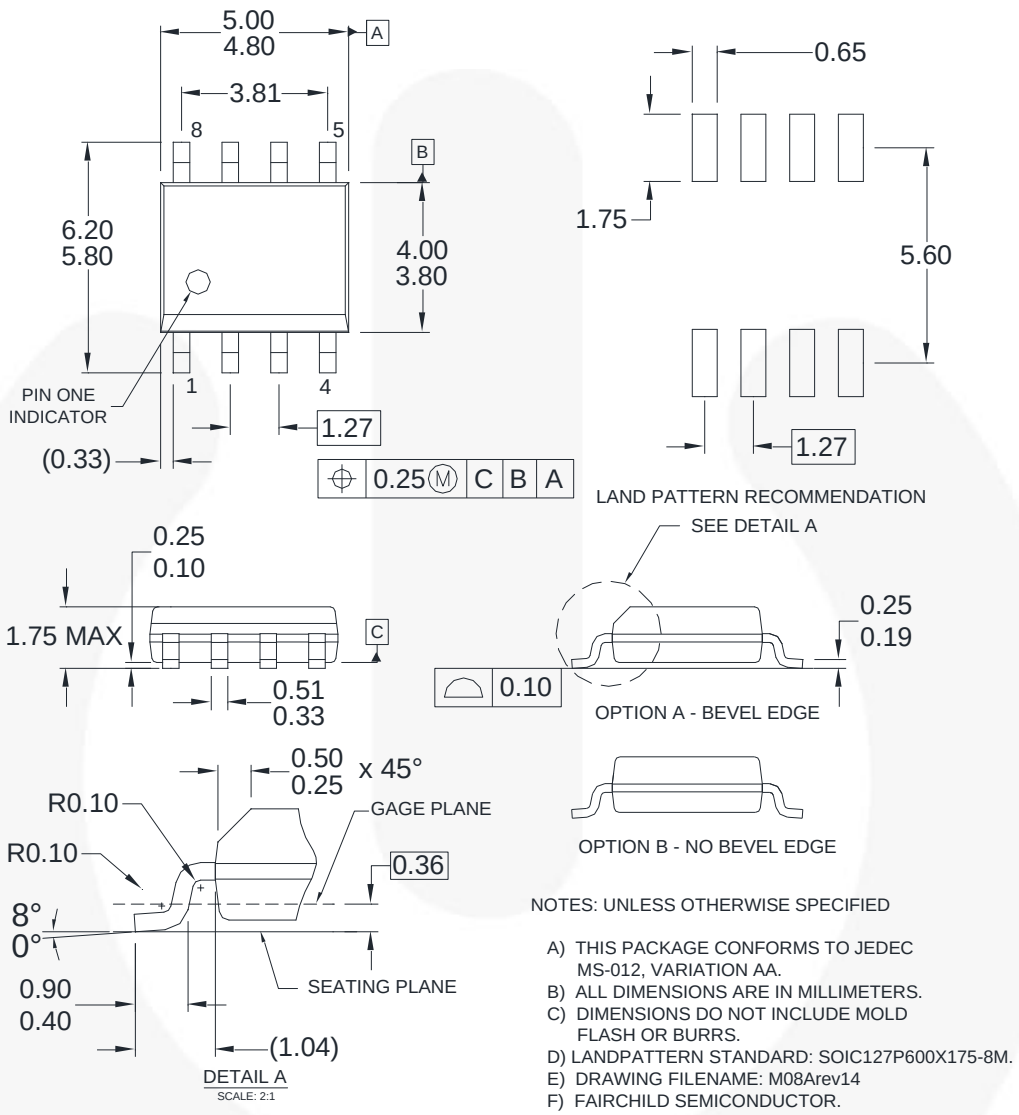

Figure 47. 8-Lead, Small Outline Package (SOP)

Package drawings are provided as a service to customers considering Fairchild components. Drawings may change in any manner without notice. Please note the revision and/or date on the drawing and contact a Fairchild Semiconductor representative to verify or obtain the most recent revision. Package specifications do not expand the terms of Fairchild's worldwide terms and conditions, specifically the warranty therein, which covers Fairchild products.

Always visit Fairchild Semiconductor's online packaging area for the most recent package drawings: http://www.fairchildsemi.com/dwg/M0/M08A.pdf.

FAIRCHILD SEMICONDUCTOR®

TRADEMARKS

The following includes registered and unregistered trademarks and service marks, owned by Fairchild Semiconductor and/or its global subsidiaries, and is not intended to be an exhaustive list of all such trademarks.

AccuPower™
AX-CAP®*
BitSiC™
Build it Now™
CorePLUS™
CorePOWER™
CROSSVOLT™
CTL™
Current Transfer Logic™
DEUXPEED®
Dual Cool™
EcoSPARK®
EfficientMax™
ESBC™
F®
Fairchild®
Fairchild Semiconductor®
FACT Quiet Series™
FACT®
FAST®
FastvCore™
FETBench™
FPS™
F-PFS™
FRFET®
Global Power Resource℠
GreenBridge™
Green FPS™
Green FPS™ e-Series™
G*max*™
GTO™
IntelliMAX™
ISOPLANAR™
Making Small Speakers Sound Louder and Better™
MegaBuck™
MICROCOUPLER™
MicroFET™
MicroPak™
MicroPak2™
MillerDrive™
MotionMax™
mWSaver®
OptoHiT™
OPTOLOGIC®
OPTOPLANAR®
PowerTrench®
PowerXS™
Programmable Active Droop™
QFET®
QS™
Quiet Series™
RapidConfigure™
Saving our world, 1mW/W/kW at a time™
SignalWise™
SmartMax™
SMART START™
Solutions for Your Success™
SPM®
STEALTH™
SuperFET®
SuperSOT™-3
SuperSOT™-6
SuperSOT™-8
SupreMOS®
SyncFET™
Sync-Lock™
SYSTEM GENERAL®*
TinyBoost®
TinyBuck®
TinyCalc™
TinyLogic®
TINYOPTO™
TinyPower™
TinyPWM™
TinyWire™
TranSiC™
TriFault Detect™
TRUECURRENT®*
µSerDes™
UHC®
Ultra FRFET™
UniFET™
VCX™
VisualMax™
VoltagePlus™
XS™

* Trademarks of System General Corporation, used under license by Fairchild Semiconductor.

DISCLAIMER

FAIRCHILD SEMICONDUCTOR RESERVES THE RIGHT TO MAKE CHANGES WITHOUT FURTHER NOTICE TO ANY PRODUCTS HEREIN TO IMPROVE RELIABILITY, FUNCTION, OR DESIGN. FAIRCHILD DOES NOT ASSUME ANY LIABILITY ARISING OUT OF THE APPLICATION OR USE OF ANY PRODUCT OR CIRCUIT DESCRIBED HEREIN; NEITHER DOES IT CONVEY ANY LICENSE UNDER ITS PATENT RIGHTS, NOR THE RIGHTS OF OTHERS. THESE SPECIFICATIONS DO NOT EXPAND THE TERMS OF FAIRCHILD'S WORLDWIDE TERMS AND CONDITIONS, SPECIFICALLY THE WARRANTY THEREIN, WHICH COVERS THESE PRODUCTS.

LIFE SUPPORT POLICY

FAIRCHILD'S PRODUCTS ARE NOT AUTHORIZED FOR USE AS CRITICAL COMPONENTS IN LIFE SUPPORT DEVICES OR SYSTEMS WITHOUT THE EXPRESS WRITTEN APPROVAL OF FAIRCHILD SEMICONDUCTOR CORPORATION.

As used herein:

1. Life support devices or systems are devices or systems which, (a) are intended for surgical implant into the body or (b) support or sustain life, and (c) whose failure to perform when properly used in accordance with instructions for use provided in the labeling, can be reasonably expected to result in a significant injury of the user.
2. A critical component in any component of a life support, device, or system whose failure to perform can be reasonably expected to cause the failure of the life support device or system, or to affect its safety or effectiveness.

ANTI-COUNTERFEITING POLICY

Fairchild Semiconductor Corporation's Anti-Counterfeiting Policy. Fairchild's Anti-Counterfeiting Policy is also stated on our external website, www.fairchildsemi.com, under Sales Support.

Counterfeiting of semiconductor parts is a growing problem in the industry. All manufacturers of semiconductor products are experiencing counterfeiting of their parts. Customers who inadvertently purchase counterfeit parts experience many problems such as loss of brand reputation, substandard performance, failed applications, and increased cost of production and manufacturing delays. Fairchild is taking strong measures to protect ourselves and our customers from the proliferation of counterfeit parts. Fairchild strongly encourages customers to purchase Fairchild parts either directly from Fairchild or from Authorized Fairchild Distributors who are listed by country on our web page cited above. Products customers buy either from Fairchild directly or from Authorized Fairchild Distributors are genuine parts, have full traceability, meet Fairchild's quality standards for handling and storage and provide access to Fairchild's full range of up-to-date technical and product information. Fairchild and our Authorized Distributors will stand behind all warranties and will appropriately address any warranty issues that may arise. Fairchild will not provide any warranty coverage or other assistance for parts bought from Unauthorized Sources. Fairchild is committed to combat this global problem and encourage our customers to do their part in stopping this practice by buying direct or from authorized distributors.

PRODUCT STATUS DEFINITIONS

Definition of Terms

Datasheet Identification	Product Status	Definition
Advance Information	Formative / In Design	Datasheet contains the design specifications for product development. Specifications may change in any manner without notice.
Preliminary	First Production	Datasheet contains preliminary data; supplementary data will be published at a later date. Fairchild Semiconductor reserves the right to make changes at any time without notice to improve design.
No Identification Needed	Full Production	Datasheet contains final specifications. Fairchild Semiconductor reserves the right to make changes at any time without notice to improve the design.
Obsolete	Not In Production	Datasheet contains specifications on a product that is discontinued by Fairchild Semiconductor. The datasheet is for reference information only.

Rev. I66

ON Semiconductor and ON are trademarks of Semiconductor Components Industries, LLC dba ON Semiconductor or its subsidiaries in the United States and/or other countries. ON Semiconductor owns the rights to a number of patents, trademarks, copyrights, trade secrets, and other intellectual property. A listing of ON Semiconductor's product/patent coverage may be accessed at www.onsemi.com/site/pdf/Patent−Marking.pdf. ON Semiconductor reserves the right to make changes without further notice to any products herein. ON Semiconductor makes no warranty, representation or guarantee regarding the suitability of its products for any particular purpose, nor does ON Semiconductor assume any liability arising out of the application or use of any product or circuit, and specifically disclaims any and all liability, including without limitation special, consequential or incidental damages. Buyer is responsible for its products and applications using ON Semiconductor products, including compliance with all laws, regulations and safety requirements or standards, regardless of any support or applications information provided by ON Semiconductor. "Typical" parameters which may be provided in ON Semiconductor data sheets and/or specifications can and do vary in different applications and actual performance may vary over time. All operating parameters, including "Typicals" must be validated for each customer application by customer's technical experts. ON Semiconductor does not convey any license under its patent rights nor the rights of others. ON Semiconductor products are not designed, intended, or authorized for use as a critical component in life support systems or any FDA Class 3 medical devices or medical devices with a same or similar classification in a foreign jurisdiction or any devices intended for implantation in the human body. Should Buyer purchase or use ON Semiconductor products for any such unintended or unauthorized application, Buyer shall indemnify and hold ON Semiconductor and its officers, employees, subsidiaries, affiliates, and distributors harmless against all claims, costs, damages, and expenses, and reasonable attorney fees arising out of, directly or indirectly, any claim of personal injury or death associated with such unintended or unauthorized use, even if such claim alleges that ON Semiconductor was negligent regarding the design or manufacture of the part. ON Semiconductor is an Equal Opportunity/Affirmative Action Employer. This literature is subject to all applicable copyright laws and is not for resale in any manner.

PUBLICATION ORDERING INFORMATION

LITERATURE FULFILLMENT:
Literature Distribution Center for ON Semiconductor
19521 E. 32nd Pkwy, Aurora, Colorado 80011 USA
Phone: 303−675−2175 or 800−344−3860 Toll Free USA/Canada
Fax: 303−675−2176 or 800−344−3867 Toll Free USA/Canada
Email: orderlit@onsemi.com

N. American Technical Support: 800−282−9855 Toll Free USA/Canada
Europe, Middle East and Africa Technical Support:
Phone: 421 33 790 2910
Japan Customer Focus Center
Phone: 81−3−5817−1050

ON Semiconductor Website: **www.onsemi.com**

Order Literature: http://www.onsemi.com/orderlit

For additional information, please contact your local Sales Representative