Silicon Carbide (SiC) Schottky Diode – EliteSiC, 8 A, 1200 V, D1, DPAK

FFSD08120A

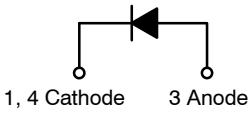

Schottky Diode

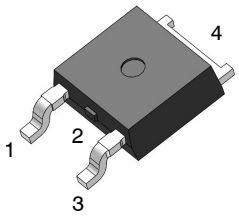

DPAK
CASE 369AS

Description

Silicon Carbide (SiC) Schottky Diodes use a completely new technology that provides superior switching performance and higher reliability compared to Silicon. No reverse recovery current, temperature independent switching characteristics, and excellent thermal performance sets Silicon Carbide as the next generation of power semiconductor. System benefits include highest efficiency, faster operating frequency, increased power density, reduced EMI, and reduced system size and cost.

Features

- Max Junction Temperature 175°C
- Avalanche Rated 80 mJ
- High Surge Current Capacity
- Positive Temperature Coefficient
- Ease of Paralleling
- No Reverse Recovery/No Forward Recovery
- This Device is Pb−Free, Halogen Free/BFR Free and RoHS Compliant

Applications

- General Purpose
- SMPS, Solar Inverter, UPS
- Power Switching Circuits

MARKING DIAGRAM

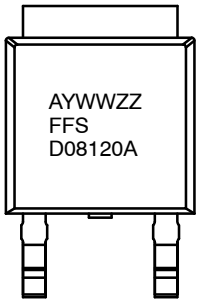

A	= Assembly Plant Code
YWW	= Date Code (Year & Week)
ZZ	= Lot Code
FFSD08120A	= Specific Device Code

ORDERING INFORMATION

See detailed ordering and shipping information on page 2 of this data sheet.

ABSOLUTE MAXIMUM RATINGS (T_C = 25°C unless otherwise noted)

Symbol	Parameter		Value	Unit
V_{RRM}	Peak Repetitive Reverse Voltage		1200	V
E_{AS}	Single Pulse Avalanche Energy (Note 1)		80	mJ
I_F	Continuous Rectified Forward Current @ T_C < 168°C		8	A
	Continuous Rectified Forward Current @ T_C < 135°C		22.5	A
$I_{F,Max}$	Non-Repetitive Peak Forward Surge Current	T_C = 25°C, 10 μs	530	A
		T_C = 150°C, 10 μs	480	A
$I_{F,SM}$	Non-Repetitive Forward Surge Current	Half−Sine Pulse, t_p = 8.3 ms	77	A
$I_{F,RM}$	Repetitive Forward Surge Current	Half−Sine Pulse, t_p = 8.3 ms	45	A
P_{TOT}	Power Dissipation	T_C = 25°C	263	W
		T_C = 150°C	44	W
T_J, T_{STG}	Operating and Storage Temperature Range		−55 to +175	°C

Stresses exceeding those listed in the Maximum Ratings table may damage the device. If any of these limits are exceeded, device functionality should not be assumed, damage may occur and reliability may be affected.

1. E_{AS} of 80 mJ is based on starting T_J = 25°C, L = 0.5 mH, I_{AS} = 18 A, V = 50 V.

THERMAL CHARACTERISTICS

Symbol	Parameter	Value	Unit
$R_{\theta JC}$	Thermal Resistance, Junction to Case, Max	0.57	°C/W

ELECTRICAL CHARACTERISTICS (T_C = 25°C unless otherwise noted)

Symbol	Parameter	Test Condition	Min	Typ	Max	Unit
V_F	Forward Voltage	I_F = 8 A, T_C = 25°C	–	1.45	1.75	V
		I_F = 8 A, T_C = 125°C	–	1.7	2.0	
		I_F = 8 A, T_C = 175°C	–	2.0	2.4	
I_R	Reverse Current	V_R = 1200 V, T_C = 25°C	–	–	200	μA
		V_R = 1200 V, T_C = 125°C	–	–	300	
		V_R = 1200 V, T_C = 175°C	–	–	400	
Q_C	Total Capacitive Charge	V = 800 V	–	55	–	nC
C	Total Capacitance	V_R = 1 V, f = 100 kHz	–	538	–	pF
		V_R = 400 V, f = 100 kHz	–	50	–	
		V_R = 800 V, f = 100 kHz	–	40	–	

Product parametric performance is indicated in the Electrical Characteristics for the listed test conditions, unless otherwise noted. Product performance may not be indicated by the Electrical Characteristics if operated under different conditions.

ORDERING INFORMATION

Part Number	Top Marking	Package	Packing Method	Reel Size	Tape Width	Quantity
FFSD08120A	FFSD08120A	DPAK	Tape & Reel†	13″	12 mm	2500 Units

†For information on tape and reel specifications, including part orientation and tape sizes, please refer to our Tape and Reel Packaging Specifications Brochure, BRD8011/D

TYPICAL CHARACTERISTICS

(T_J = 25°C UNLESS OTHERWISE NOTED)

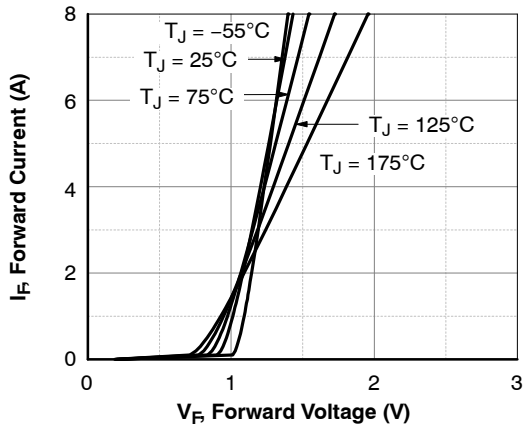

Figure 1. Forward Characteristics

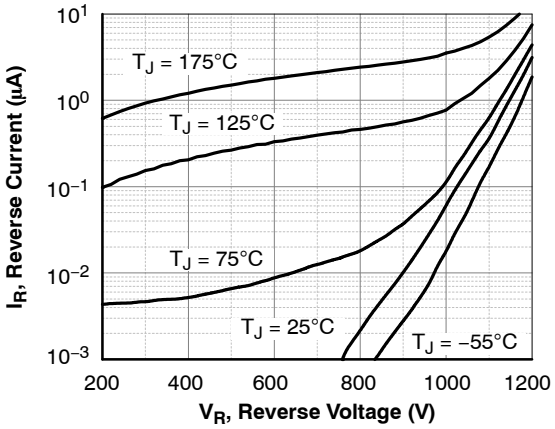

Figure 2. Reverse Characteristics

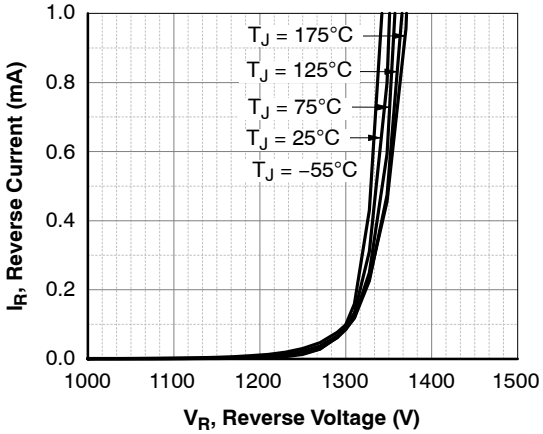

Figure 3. Reverse Characteristics

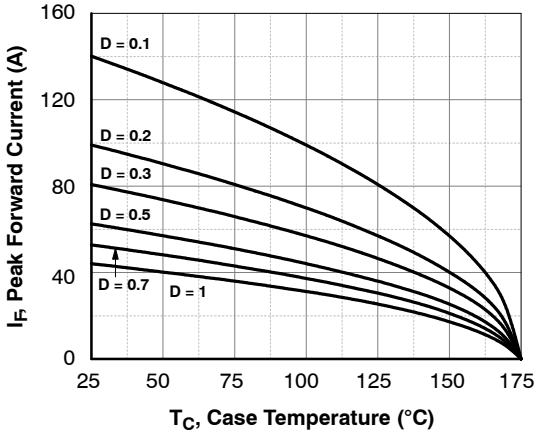

Figure 4. Current Derating

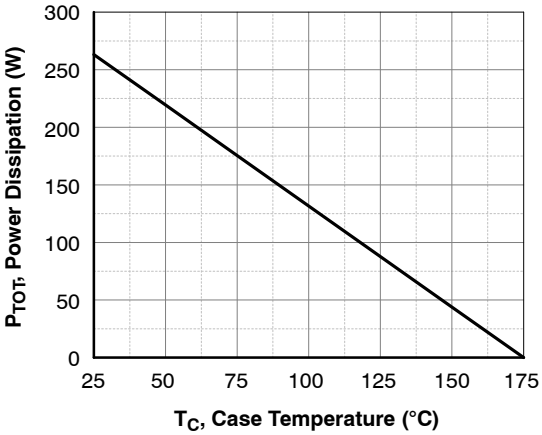

Figure 5. Power Derating

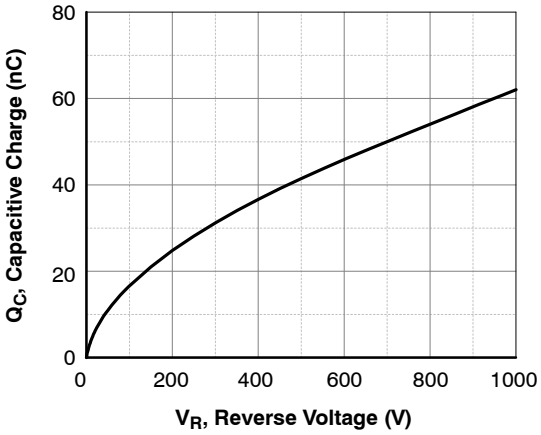

Figure 6. Capacitive Charge vs. Reverse Voltage

TYPICAL CHARACTERISTICS (CONTINUED)

(T_J = 25°C UNLESS OTHERWISE NOTED)

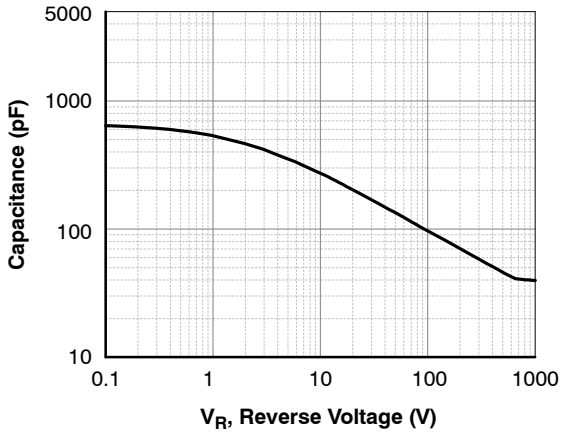

Figure 7. Capacitance vs. Reverse Voltage

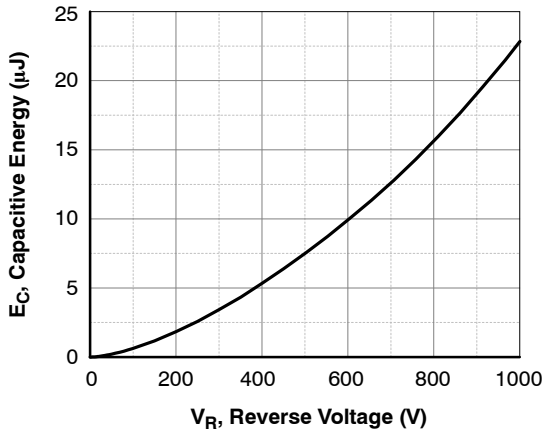

Figure 8. Capacitance Stored Energy

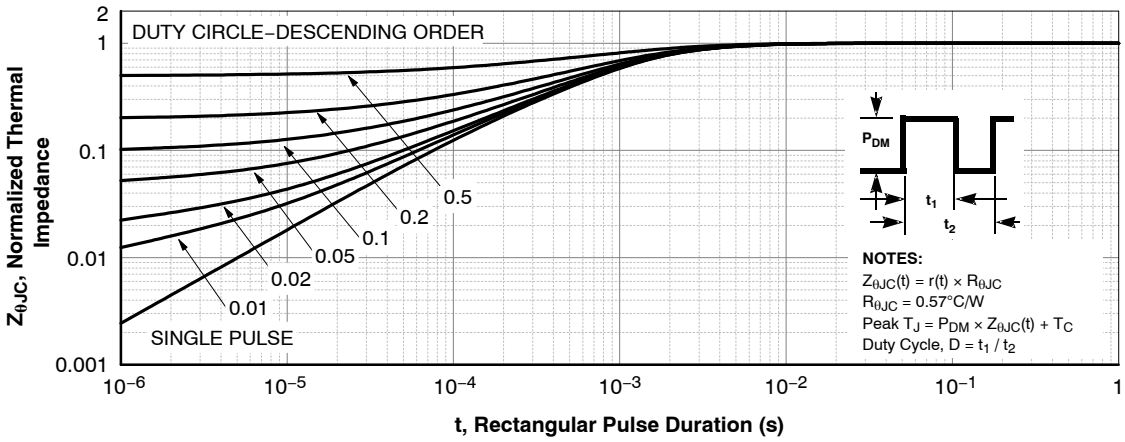

Figure 9. Junction−to−Case Transient Thermal Response Curve

TEST CIRCUIT AND WAVEFORMS

L = 0.5 mH
R < 0.1 Ω
V_{DD} = 50 V
EAVL = 1/2LI2 [$V_{R(AVL)}$ / ($V_{R(AVL)}$ − V_{DD})]
Q1 = IGBT (BV_{CES} > DUT $V_{R(AVL)}$)

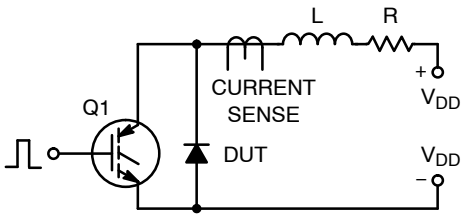

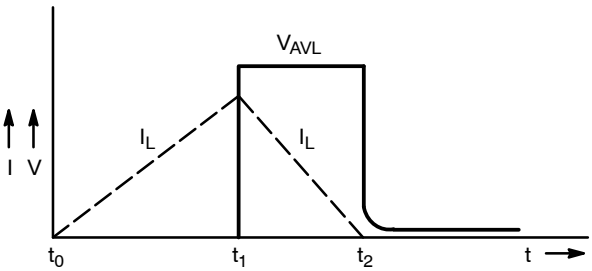

Figure 10. Unclamped Inductive Switching Test Circuit & Waveform

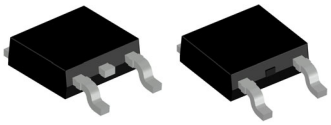

DPAK3 6.10x6.54x2.29, 4.57P
CASE 369AS
ISSUE B

DATE 20 DEC 2023

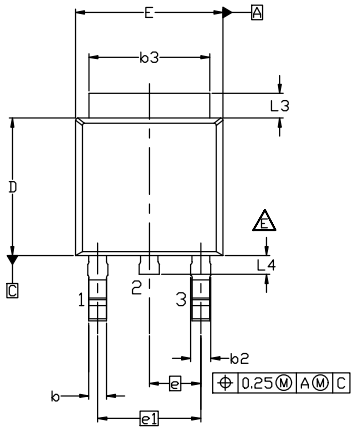

NON-DIODE PRODUCTS VERSION

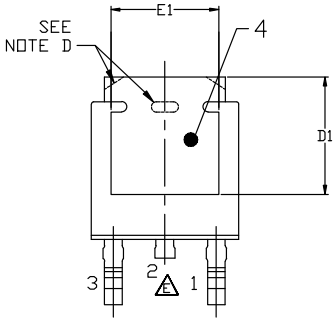

NON-DIODE PRODUCTS VERSION

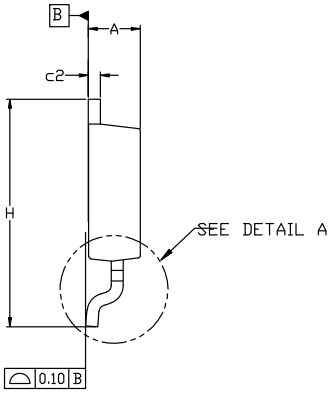

NOTES: UNLESS OTHERWISE SPECIFIED
A) THIS PACKAGE CONFORMS TO JEDEC, TO-252, ISSUE F, VARIATION AA.
B) ALL DIMENSIONS ARE IN MILLIMETERS.
C) DIMENSIONING AND TOLERANCING PER ASME Y14.5M-2018.
D) SUPPLIER DEPENDENT MOLD LOCKING HOLES OR CHAMFERED CORNERS OR EDGE PROTRUSION.
E) FOR DIODE PRODUCTS, L4 IS 0.25 MM MAX PLASTIC BODY STUB WITHOUT CENTER LEAD.
F) DIMENSIONS ARE EXCLUSIVE OF BURRS, MOLD FLASH AND TIE BAR EXTRUSIONS.
G) LAND PATTERN RECOMMENDATION IS BASED ON IPC7351A STD TO228P991X239-3N.

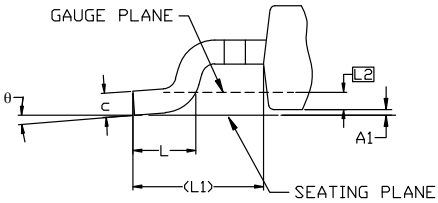

DETAIL A
(ROTATED -90°)
SCALE: 12X

DIM	MILLIMETERS		
	MIN.	NOM.	MAX.
A	2.18	2.29	2.39
A1	0.00	–	0.127
b	0.64	0.77	0.89
b2	0.76	0.95	1.14
b3	5.21	5.34	5.46
c	0.45	0.53	0.61
c2	0.45	0.52	0.58
D	5.97	6.10	6.22
D1	5.21	---	---
E	6.35	6.54	6.73
E1	4.32	---	---
e	2.286 BSC		
e1	4.572 BSC		
H	9.40	9.91	10.41
L	1.40	1.59	1.78
L1	2.90 REF		
L2	0.51 BSC		
L3	0.89	1.08	1.27
L4	---	---	1.02
θ	0°	---	10°

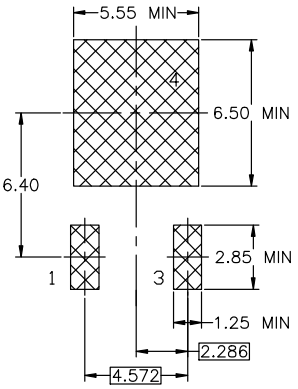

LAND PATTERN RECOMMENDATION

*FOR ADDITIONAL INFORMATION ON OUR PB-FREE STRATEGY AND SOLDERING DETAILS, PLEASE DOWNLOAD THE ON SEMICONDUCTOR SOLDERING AND MOUNTING TECHNIQUES REFERENCE MANUAL, SOLDERRM/D.

GENERIC MARKING DIAGRAM*

*This information is generic. Please refer to device data sheet for actual part marking. Pb-Free indicator, "G" or microdot "▪", may or may not be present. Some products may not follow the Generic Marking.

XXXX = Specific Device Code
A = Assembly Location
Y = Year
WW = Work Week
ZZ = Assembly Lot Code

DOCUMENT NUMBER:	98AON13810G	Electronic versions are uncontrolled except when accessed directly from the Document Repository. Printed versions are uncontrolled except when stamped "CONTROLLED COPY" in red.	
DESCRIPTION:	DPAK3 6.10x6.54x2.29, 4.57P		PAGE 1 OF 1

ADDITIONAL INFORMATION

TECHNICAL PUBLICATIONS:
Technical Library: www.onsemi.com/design/resources/technical−documentation
onsemi Website: www.onsemi.com

ONLINE SUPPORT: www.onsemi.com/support
For additional information, please contact your local Sales Representative at
www.onsemi.com/support/sales