MOSFET – N-Channel, POWERTRENCH®

30 V, 58 A, 9 mΩ

FDD8880, FDD8880-G

V_{DSS} MAX	$r_{DS(ON)}$ MAX	I_D MAX
30 V	9 mΩ @ 10 V	58 A
	12 mΩ @ 4.5 V	

DPAK3
(TO−252 3 LD)
CASE 369AS

General Description

This N−Channel MOSFET has been designed specifically to improve the overall efficiency of DC/DC converters using either synchronous or conventional switching PWM controllers. It has been optimized for low gate charge, low $r_{DS(ON)}$ and fast switching speed.

Features

- $r_{DS(ON)}$ = 9 mΩ, V_{GS} = 10 V, I_D = 35 A
- $r_{DS(ON)}$ = 12 mΩ, V_{GS} = 4.5 V, I_D = 35 A
- High Performance Trench Technology for Extremely Low $r_{DS(ON)}$
- Low Gate Charge
- High Power and Current Handling Capability
- These Devices are Pb−Free and are RoHS Compliant

Applications

- DC/DC Converters

MARKING DIAGRAM

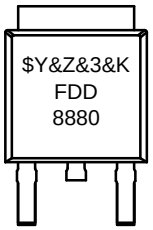

$Y = **onsemi** Logo
&Z = Assembly Plant Code
&3 = 3−Digit Date Code Format
&K = 2−Digits Lot Run Traceability Code
FDD8880 = Device Code

MOSFET MAXIMUM RATINGS (T_C = 25°C unless otherwise noted)

Symbol	Parameter		Ratings	Unit
V_{DSS}	Drain to Source Voltage		30	V
V_{GS}	Gate to Source Voltage		±20	V
I_D	Drain Current	Continuous (T_A = 25°C, V_{GS} = 10 V) (Note 1)	58	A
		Continuous (T_A = 25°C, V_{GS} = 4.5 V) (Note 1)	51	A
		Continuous (T_{amb} = 25°C, V_{GS} = 10 V, with $R_{\theta JA}$ = 52°C/W) (Note 1)	13	A
		Pulsed	Figure 4	A
E_{AS}	Single Pulse Avalanche Energy (Note 2)		53	mJ
P_D	Power Dissipation		55	W
	Derate above 25°C		0.37	mW/°C
T_J, T_{STG}	Operating and Storage Temperature		–55 to 175	°C

Stresses exceeding those listed in the Maximum Ratings table may damage the device. If any of these limits are exceeded, device functionality should not be assumed, damage may occur and reliability may be affected.

1. Package current limitation is 35A.
2. Starting T_J = 25°C, L = 0.14 mH, I_{AS} = 28 A, V_{DD} = 27 V, V_{GS} = 10 V.

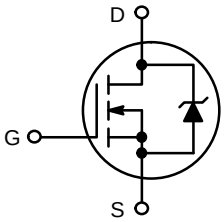

N−Channel

ORDERING INFORMATION

See detailed ordering and shipping information on page 12 of this data sheet.

NOTE: Some of the devices on this data sheet have been **DISCONTINUED**. Please refer to the table on page 12.

© Semiconductor Components Industries, LLC, 2008

THERMAL CHARACTERISTICS

Symbol	Parameter	Ratings	Unit
$R_{\theta JC}$	Thermal Resistance, Junction to Case TO−252	2.73	°C/W
$R_{\theta JA}$	Thermal Resistance, Junction to Ambient TO−252	100	°C/W
$R_{\theta JA}$	Thermal Resistance, Junction to Ambient TO−252, 1 in^2 Copper Pad Area	52	°C/W

ELECTRICAL CHARACTERISTICS (T_C = 25°C unless otherwise noted)

Symbol	Parameter	Test Conditions	Min	Typ	Max	Unit
OFF CHARACTERISTICS						
B_{VDSS}	Drain to Source Breakdown Voltage	I_D = 250 μA, V_{GS} = 0 V	30	–	–	V
I_{DSS}	Zero Gate Voltage Drain Current	V_{DS} = 24 V, V_{GS} = 0 V	–	–	1	μA
		V_{DS} = 24 V, V_{GS} = 0 V, T_C = 150°C	–	–	250	
I_{GSS}	Gate to Source Leakage Current	V_{GS} = ±20 V	–	–	±100	nA
ON CHARACTERISTICS						
$V_{GS(TH)}$	Gate to Source Threshold Voltage	V_{GS} = V_{DS}, I_D = 250 μA	1.2	–	2.5	V
$r_{DS(ON)}$	Drain to Source On Resistance	I_D = 35 A, V_{GS} = 10 V	–	0.007	0.009	Ω
		I_D = 35 A, V_{GS} = 4.5 V	–	0.009	0.012	
		I_D = 35 A, V_{GS} = 10 V, T_J = 175°C	–	0.013	0.015	
DYNAMIC CHARACTERISTICS						
C_{ISS}	Input Capacitance	V_{DS} = 15 V, V_{GS} = 0 V, f = 1 MHz	–	1260	–	pF
C_{OSS}	Output Capacitance		–	260	–	pF
C_{RSS}	Reverse Transfer Capacitance		–	150	–	pF
R_G	Gate Resistance	V_{GS} = 0.5 V, f = 1 MHz	–	2.3	–	Ω
$Q_{g(TOT)}$	Total Gate Charge at 10 V	V_{GS} = 0 V to 10 V, V_{DD} = 15 V, I_D = 35 A, I_g = 1.0 mA	–	23	31	nC
$Q_{g(5)}$	Total Gate Charge at 5 V	V_{GS} = 0 V to 5 V, V_{DD} = 15 V, I_D = 35 A, I_g = 1.0 mA	–	13	17	nC
$Q_{g(TH)}$	Threshold Gate Charge	V_{GS} = 0 V to 1 V, V_{DD} = 15 V, I_D = 35 A, I_g = 1.0 mA	–	1.3	1.7	nC
Q_{gs}	Gate to Source Gate Charge	V_{DD} = 15 V, I_D = 35 A, I_g = 1.0 mA	–	3.8	–	nC
Q_{gs2}	Gate Charge Threshold to Plateau		–	2.5	–	nC
Q_{gd}	Gate to Drain “Miller” Charge		–	5.0	–	nC
SWITCHING CHARACTERISTICS (V_{GS} = 10 V)						
t_{ON}	Turn−On Time	V_{DD} = 15 V, I_D = 35 A, V_{GS} = 10 V, R_{GS} = 10 Ω	–	–	147	ns
$t_{d(ON)}$	Turn−On Delay Time		–	8	–	ns
t_r	Rise Time		–	91	–	ns
$t_{d(OFF)}$	Turn−Off Delay Time		–	38	–	ns
t_f	Fall Time		–	32	–	ns
t_{OFF}	Turn−Off Time		–	–	108	ns
DRAIN−SOURCE DIODE CHARACTERISTICS						
V_{SD}	Source to Drain Diode Voltage	I_{SD} = 35 A	–	–	1.25	V
		I_{SD} = 15 A	–	–	1.0	V
t_{rr}	Reverse Recovery Time	I_{SD} = 35 A, dI_{SD}/dt = 100 A/μs	–	–	27	ns
Q_{RR}	Reverse Recovered Charge	I_{SD} = 35 A, dI_{SD}/dt = 100 A/μs	–	–	14	nC

Product parametric performance is indicated in the Electrical Characteristics for the listed test conditions, unless otherwise noted. Product performance may not be indicated by the Electrical Characteristics if operated under different conditions.

TYPICAL CHARACTERISTICS

(T_J = 25°C unless otherwise noted)

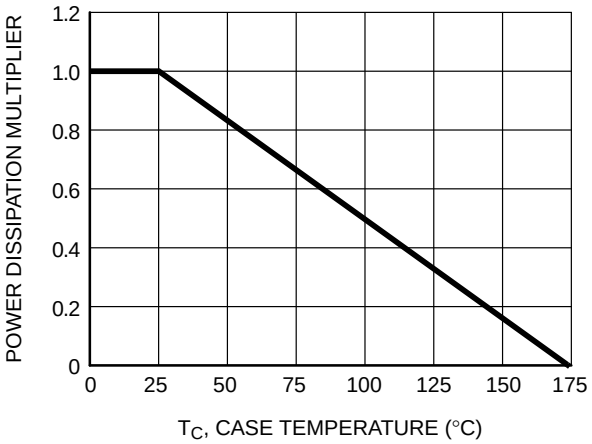

Figure 1. Normalized Power Dissipation vs. Case Temperature

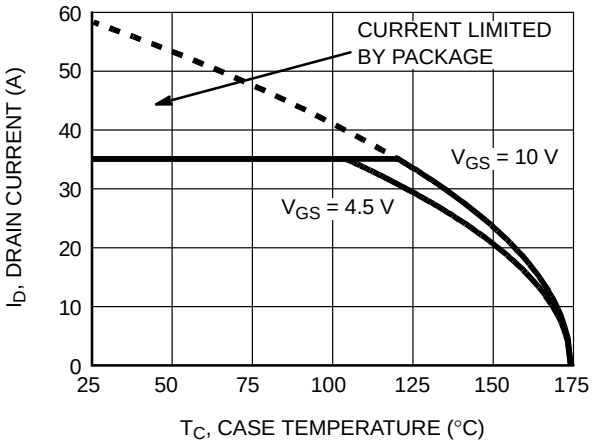

Figure 2. Maximum Continuous Drain Current vs. Case Temperature

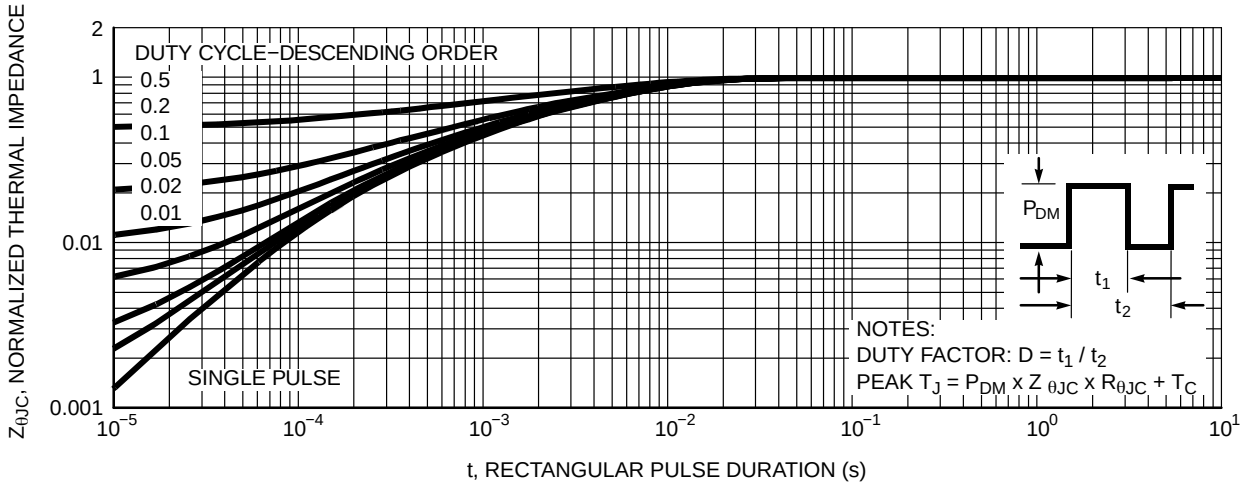

Figure 3. Normalized Maximum Transient Thermal Impedance

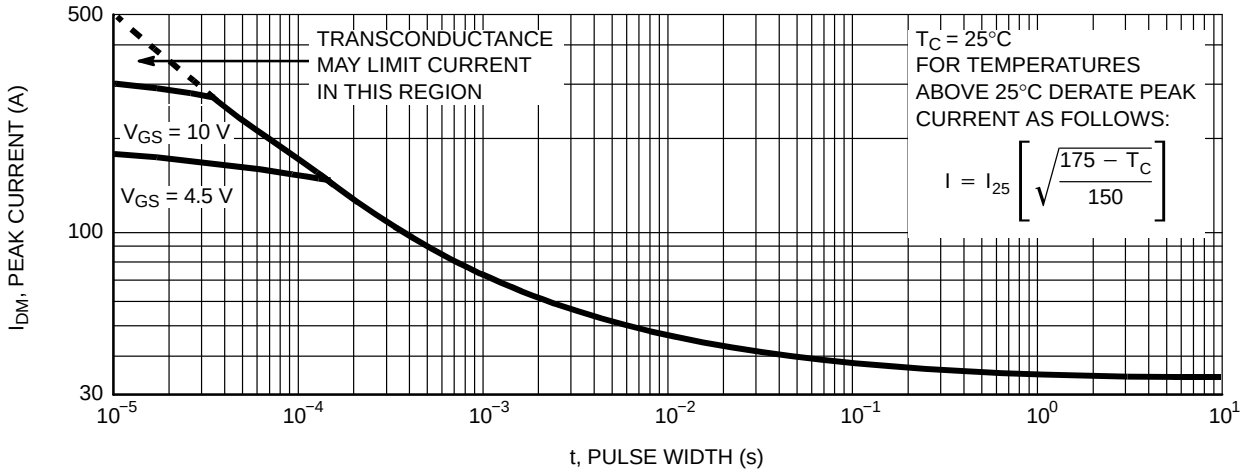

Figure 4. Peak Current Capability

TYPICAL CHARACTERISTICS

(T_J = 25°C unless otherwise noted) (continued)

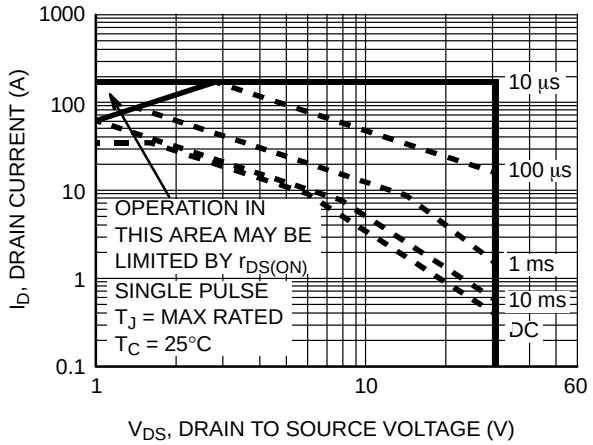

Figure 5. Forward Bis Safe Operating Area

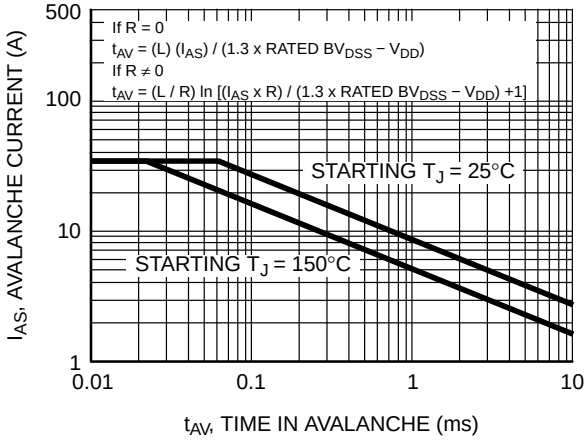

NOTE: Refer to **onsemi** Application Notes AN−7514 and AN−7515

Figure 6. Unclamped Inductive Switching Capability

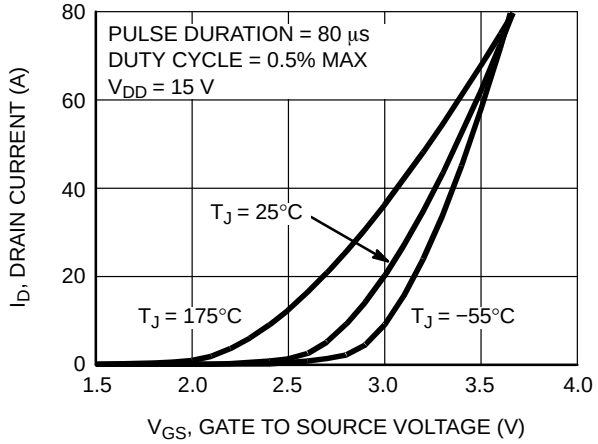

Figure 7. Transfer Characteristics

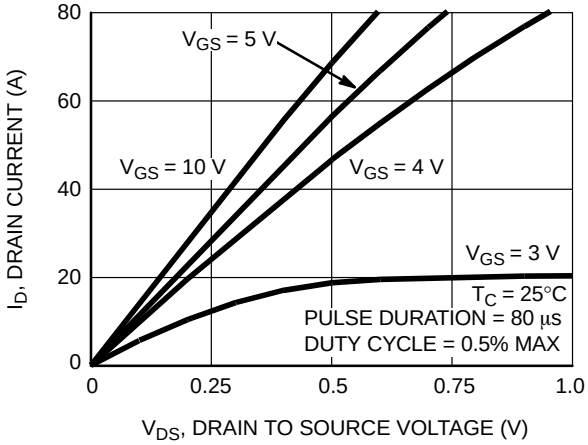

Figure 8. Saturation Characteristics

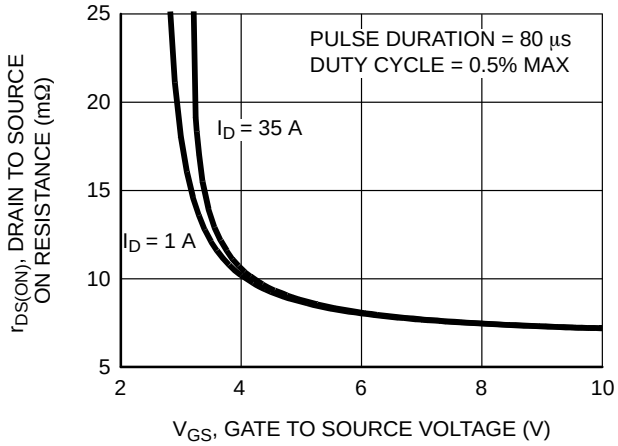

Figure 9. Drain to Source On Resistance vs. Gate Voltage and Drain Current

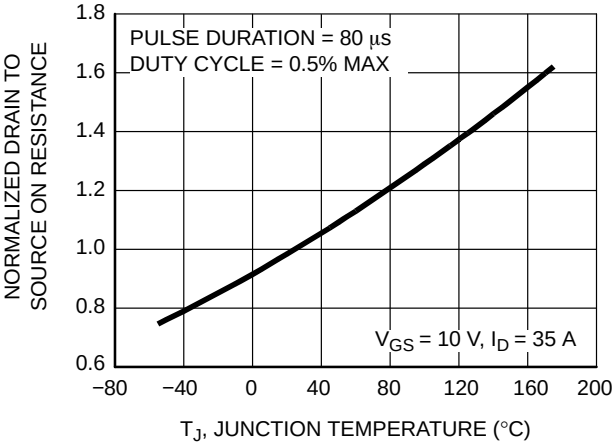

Figure 10. Normalized Drain to Source On Resistance vs. Junction Temperature

TYPICAL CHARACTERISTICS

(T_J = 25°C unless otherwise noted) (continued)

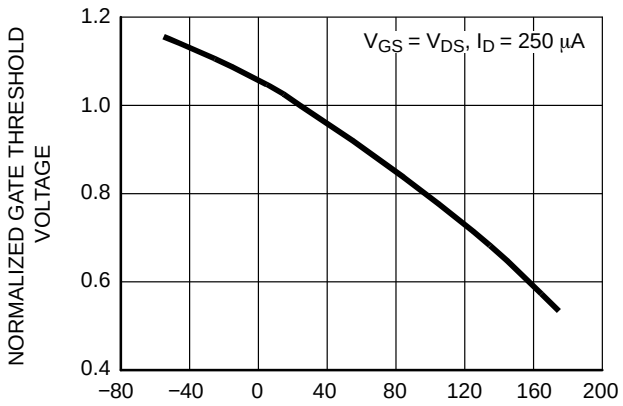

Figure 11. Normalized Gate Threshold Voltage vs. Junction Temperature

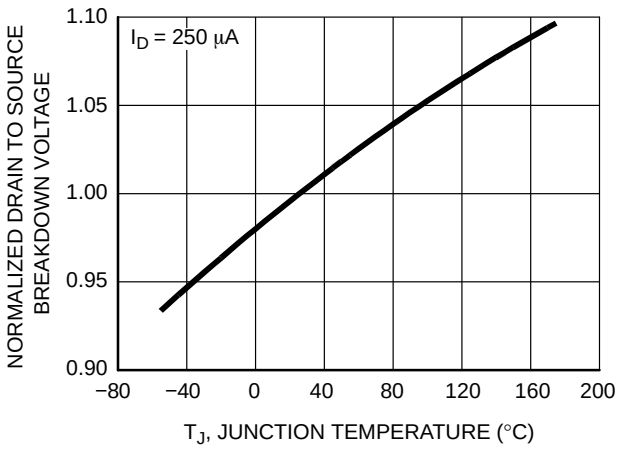

Figure 12. Normalized Drain to Source Breakdown Voltage vs. Junction Temperature

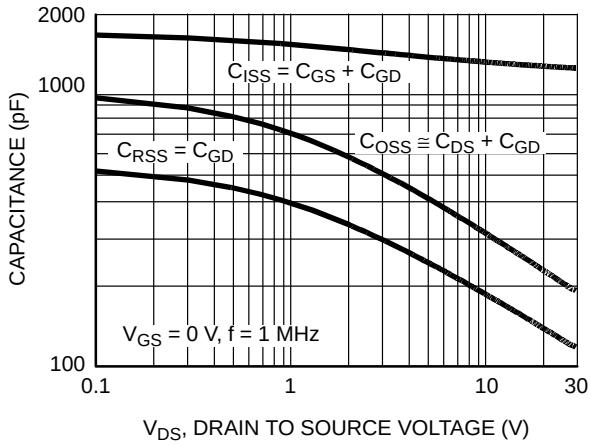

Figure 13. Capacitance vs. Drain to Source Voltage

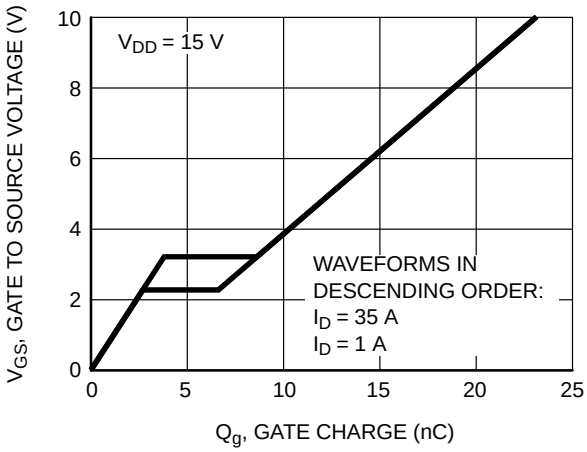

Figure 14. Gate Charge Waveforms for Constant Gate Current

TEST CIRCUITS AND WAVEFORMS

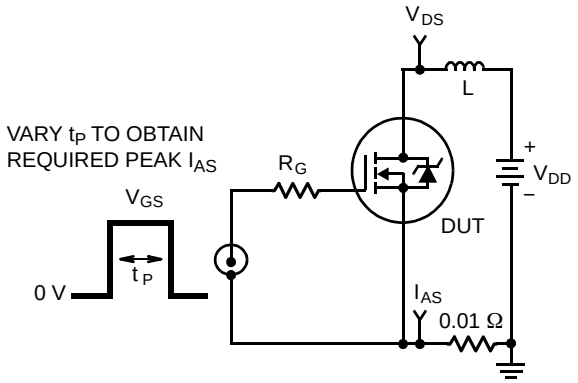

Figure 15. Unclamped Energy Test Circuit

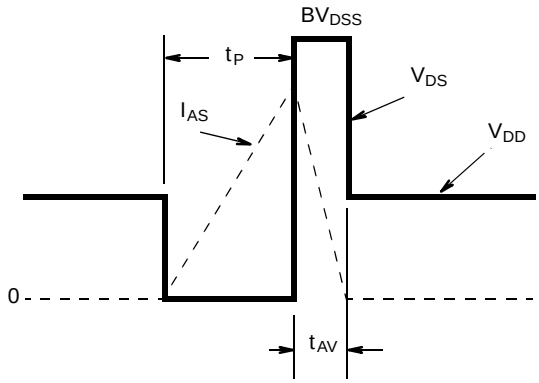

Figure 16. Unclamped Energy Waveforms

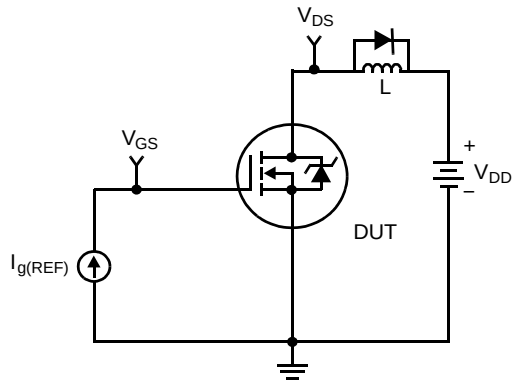

Figure 17. Gate Charge Test Circuit

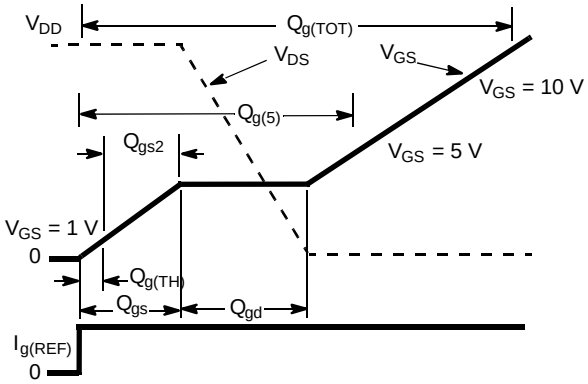

Figure 18. Gate Charge Waveforms

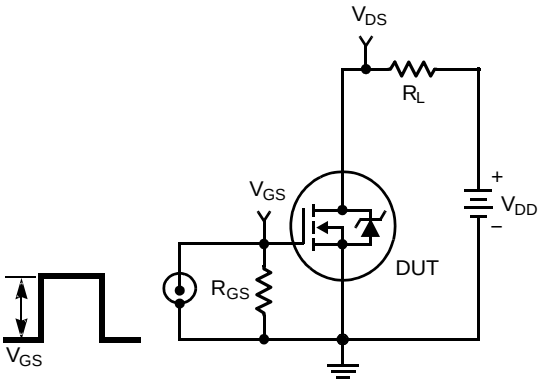

Figure 19. Switching Time Test Circuit

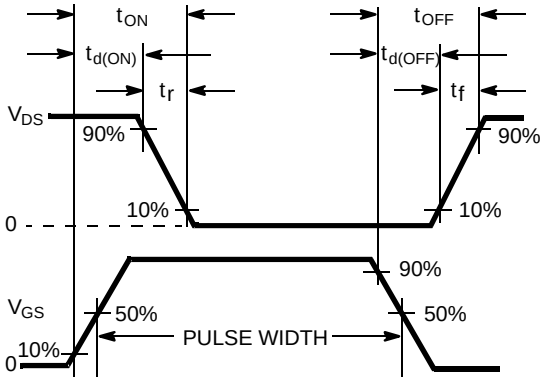

Figure 20. Switching Time Waveforms

THERMAL RESISTANCE VS. MOUNTING PAD AREA

The maximum rated junction temperature, T_{JM}, and the thermal resistance of the heat dissipating path determines the maximum allowable device power dissipation, P_{DM}, in an application. Therefore the application's ambient temperature, T_A (°C), and thermal resistance $R_{\theta JA}$ (°C/W) must be reviewed to ensure that T_{JM} is never exceeded. Equation 1 mathematically represents the relationship and serves as the basis for establishing the rating of the part.

$$P_{DM} = \frac{(T_{JM} - T_A)}{R_{\theta JA}} \qquad \text{(eq. 1)}$$

In using surface mount devices such as the TO−252 package, the environment in which it is applied will have a significant influence on the part's current and maximum power dissipation ratings. Precise determination of P_{DM} is complex and influenced by many factors:

1. Mounting pad area onto which the device is attached and whether there is copper on one side or both sides of the board.
2. The number of copper layers and the thickness of the board.
3. The use of external heat sinks.
4. The use of thermal vias.
5. Air flow and board orientation.
6. For non steady state applications, the pulse width, the duty cycle and the transient thermal response of the part, the board and the environment they are in.

onsemi provides thermal information to assist the designer's preliminary application evaluation. Figure 21 defines the $R_{\theta JA}$ for the device as a function of the top copper (component side) area. This is for a horizontally positioned FR−4 board with 1oz copper after 1000 seconds of steady state power with no air flow. This graph provides the necessary information for calculation of the steady state junction temperature or power dissipation. Pulse applications can be evaluated using the **onsemi** device Spice thermal model or manually utilizing the normalized maximum transient thermal impedance curve.

Thermal resistances corresponding to other copper areas can be obtained from Figure 21 or by calculation using Equation 2 or 3. Equation 2 is used for copper area defined in inches square and Equation 3 is for area in centimeters square. The area, in square inches or square centimeters is the top copper area including the gate and source pads.

$$R_{\theta JA} = 33.32 + \frac{23.84}{(0.268 + \text{Area})} \qquad \text{Area in Inches Squared} \qquad \text{(eq. 2)}$$

$$R_{\theta JA} = 33.32 + \frac{154}{(1.73 + \text{Area})} \qquad \text{Area in Inches Squared} \qquad \text{(eq. 3)}$$

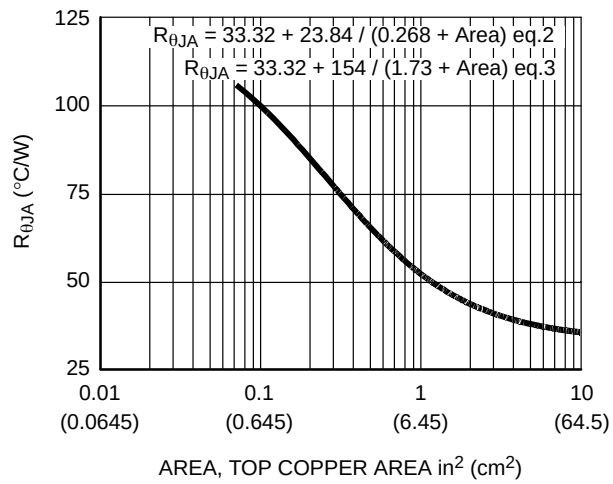

Figure 21. Thermal Resistance vs. Mounting Pad Area

PSPICE ELECTRICAL MODEL

```
.SUBCKT FDD8880 2 1 3 ; rev April 2004
Ca 12 8 9.5e−10
Cb 15 14 9.5e−10
Cin 6 8 1.15e−9

Dbody 7 5 DbodyMOD
Dbreak 5 11 DbreakMOD
Dplcap 10 5 DplcapMOD

Ebreak 11 7 17 18 33.15
Eds 14 8 5 8 1
Egs 13 8 6 8 1
Esg 6 10 6 8 1
Evthres 6 21 19 8 1
Evtemp 20 6 18 22 1

It 8 17 1

Lgate 1 9 5.3e−9
Ldrain 2 5 1.0e−9
Lsource 3 7 1.7e−9

RLgate 1 9 53
RLdrain 2 5 10
RLsource 3 7 17

Mmed 16 6 8 8 MmedMOD
Mstro 16 6 8 8 MstroMOD
Mweak 16 21 8 8 MweakMOD

Rbreak 17 18 RbreakMOD 1
Rdrain 50 16 RdrainMOD 3.2e−3
Rgate 9 20 2.2
RSLC1 5 51 RSLCMOD 1e−6
RSLC2 5 50 1e3
Rsource 8 7 RsourceMOD 3.2e−3
Rvthres 22 8 RvthresMOD 1
Rvtemp 18 19 RvtempMOD 1
S1a 6 12 13 8 S1AMOD
S1b 13 12 13 8 S1BMOD
S2a 6 15 14 13 S2AMOD
S2b 13 15 14 13 S2BMOD

Vbat 22 19 DC 1

ESLC 51 50 VALUE={(V(5,51)/ABS(V(5,51)))*(PWR(V(5,51)/(1e−6*170),5))}

.MODEL DbodyMOD D (IS=2E−12 IKF=10 N=1.01 RS=3.76e−3 TRS1=8e−4 TRS2=2e−7
+ CJO=4.8e−10 M=0.55 TT=1e−17 XTI=2)
.MODEL DbreakMOD D (RS=0.2 TRS1=1e−3 TRS2=−8.9e−6)
.MODEL DplcapMOD D (CJO=5.5e−10 IS=1e−30 N=10 M=0.45)

.MODEL MmedMOD NMOS (VTO=2.0 KP=10 IS=1e−30 N=10 TOX=1 L=1u W=1u RG=2.2)
.MODEL MstroMOD NMOS (VTO=2.5 KP=170 IS=1e−30 N=10 TOX=1 L=1u W=1u)
.MODEL MweakMOD NMOS (VTO=1.69 KP=0.05 IS=1e−30 N=10 TOX=1 L=1u W=1u RG=22 RS=0.1)
```

```
.MODEL RbreakMOD RES (TC1=8.3e−4 TC2=−8e−7)
.MODEL RdrainMOD RES (TC1=1.8e−3 TC2=8e−6)
.MODEL RSLCMOD RES (TC1=9e−4 TC2=1e−6)
.MODEL RsourceMOD RES (TC1=5e−3 TC2=1e−6)
.MODEL RvthresMOD RES (TC1=−1e−3 TC2=−8.2e−6)
.MODEL RvtempMOD RES (TC1=−2.6e−3 TC2=2e−7)

.MODEL S1AMOD VSWITCH (RON=1e−5 ROFF=0.1 VON=−4 VOFF=−3.5)
.MODEL S1BMOD VSWITCH (RON=1e−5 ROFF=0.1 VON=−3.5 VOFF=−4)
.MODEL S2AMOD VSWITCH (RON=1e−5 ROFF=0.1 VON=−1.3 VOFF=−0.8)
.MODEL S2BMOD VSWITCH (RON=1e−5 ROFF=0.1 VON=−0.8 VOFF=−1.3)
.ENDS
```

NOTE: For further discussion of the PSPICE model, consult **A New PSPICE Sub−Circuit for the Power MOSFET Featuring Global Temperature Options**; IEEE Power Electronics Specialist Conference Records, 1991, written by William J. Hepp and C. Frank Wheatley.

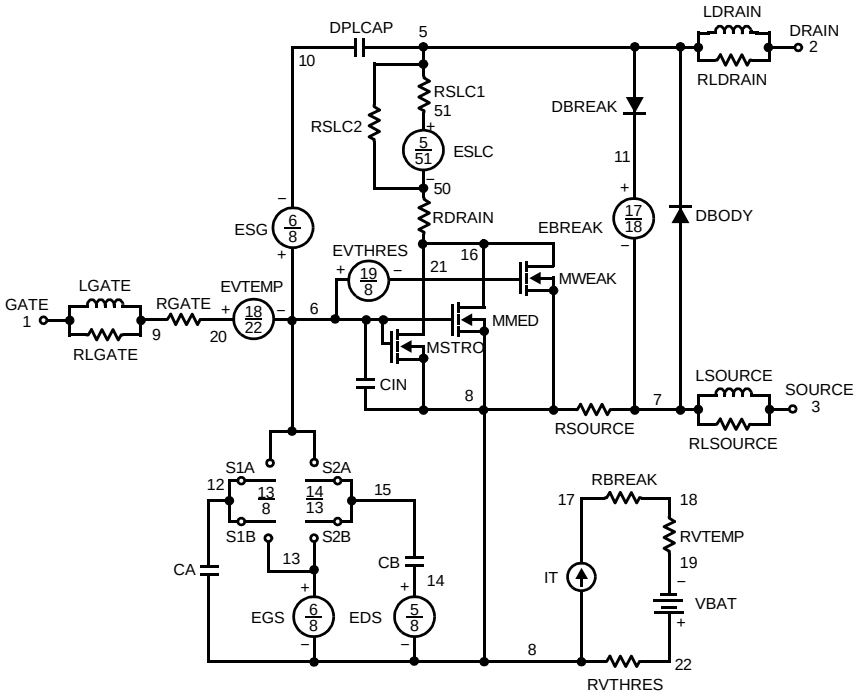

Figure 22.

SABER ELECTRICAL MODEL

```
rev April 2004
template FDD8880 n2,n1,n3
electrical n2,n1,n3

{
var i iscl
dp..model dbodymod = (isl=2e−12,ikf=10,nl=1.01,rs=3.76e−3,trs1=8e−4,trs2=2e−7,cjo=4.8e−10,m=0.55,tt=1e−17,xti=2)
dp..model dbreakmod = (rs=0.2,trs1=1e−3,trs2=−8.9e−6)
dp..model dplcapmod = (cjo=5.5e−10,isl=10e−30,nl=10,m=0.45)
m..model mmedmod = (type=_n,vto=2.0,kp=10,is=1e−30, tox=1)
m..model mstrongmod = (type=_n,vto=2.5,kp=170,is=1e−30, tox=1)
m..model mweakmod = (type=_n,vto=1.69,kp=0.05,is=1e−30, tox=1,rs=0.1)
sw_vcsp..model s1amod = (ron=1e−5,roff=0.1,von=−4,voff=−3.5)
sw_vcsp..model s1bmod = (ron=1e−5,roff=0.1,von=−3.5,voff=−4)
sw_vcsp..model s2amod = (ron=1e−5,roff=0.1,von=−1.3,voff=−0.8)
sw_vcsp..model s2bmod = (ron=1e−5,roff=0.1,von=−0.8,voff=−1.3)
c.ca n12 n8 = 9.5e−10
c.cb n15 n14 = 9.5e−10
c.cin n6 n8 = 1.15e−9

dp.dbody n7 n5 = model=dbodymod
dp.dbreak n5 n11 = model=dbreakmod
dp.dplcap n10 n5 = model=dplcapmod

spe.ebreak n11 n7 n17 n18 = 33.15
spe.eds n14 n8 n5 n8 = 1
spe.egs n13 n8 n6 n8 = 1
spe.esg n6 n10 n6 n8 = 1
spe.evthres n6 n21 n19 n8 = 1
spe.evtemp n20 n6 n18 n22 = 1

i.it n8 n17 = 1

l.lgate n1 n9 = 5.3e−9
l.ldrain n2 n5 = 1.0e−9
l.lsource n3 n7 = 1.7e−9

res.rlgate n1 n9 = 53
res.rldrain n2 n5 = 10
res.rlsource n3 n7 = 17

m.mmed n16 n6 n8 n8 = model=mmedmod, l=1u, w=1u
m.mstrong n16 n6 n8 n8 = model=mstrongmod, l=1u, w=1u
m.mweak n16 n21 n8 n8 = model=mweakmod, l=1u, w=1u

res.rbreak n17 n18 = 1, tc1=8.3e−4,tc2=−8e−7
res.rdrain n50 n16 = 3.2e−3, tc1=1.8e−3,tc2=8e−6
res.rgate n9 n20 = 2.2
res.rslc1 n5 n51 = 1e−6, tc1=9e−4,tc2=1e−6
res.rslc2 n5 n50 = 1e3
res.rsource n8 n7 = 3.2e−3, tc1=5e−3,tc2=1e−6
res.rvthres n22 n8 = 1, tc1=−1e−3,tc2=−8.2e−6
res.rvtemp n18 n19 = 1, tc1=−2.6e−3,tc2=2e−7
sw_vcsp.s1a n6 n12 n13 n8 = model=s1amod
sw_vcsp.s1b n13 n12 n13 n8 = model=s1bmod
sw_vcsp.s2a n6 n15 n14 n13 = model=s2amod
sw_vcsp.s2b n13 n15 n14 n13 = model=s2bmod
```

```
v.vbat n22 n19 = dc=1
equations {
i (n51−>n50) +=iscl
iscl: v(n51,n50) = ((v(n5,n51)/(1e−9+abs(v(n5,n51))))*((abs(v(n5,n51)*1e6/170))** 5))
}
}
```

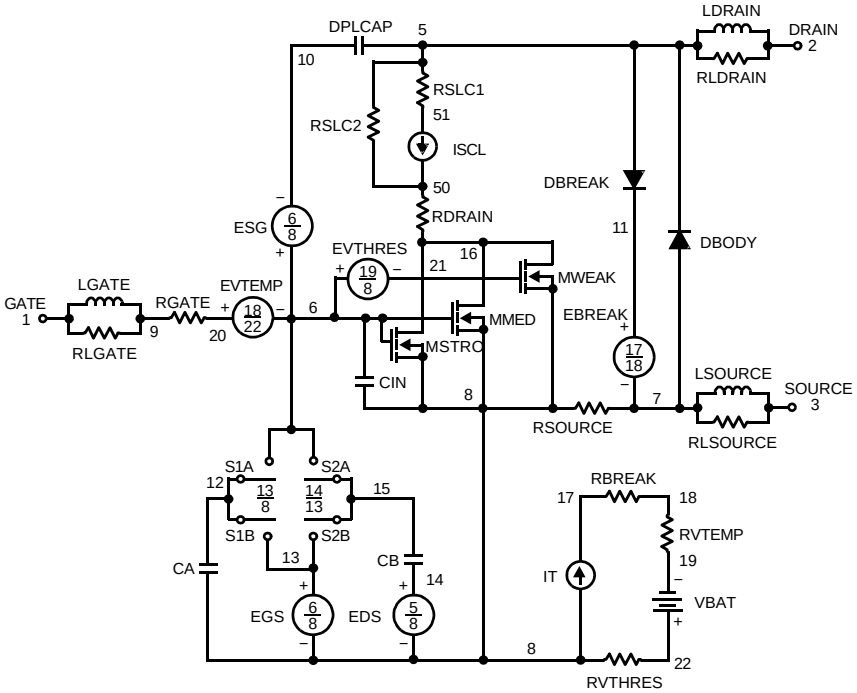

Figure 23.

SPICE THERMAL MODEL

REV 23 April 2004

FDD8880T

CTHERM1 TH 6 8e−4
CTHERM2 6 5 1e−3
CTHERM3 5 4 2.5e−3
CTHERM4 4 3 2.6e−3
CTHERM5 3 2 8e−3
CTHERM6 2 TL 1.5e−2

RTHERM1 TH 6 1.44e−1
RTHERM2 6 5 1.9e−1
RTHERM3 5 4 3.0e−1
RTHERM4 4 3 4.0e−1
RTHERM5 3 2 5.7e−1
RTHERM6 2 TL 5.8e−1

SABER THERMAL MODEL

```
SABER thermal model FDD8880T
template thermal_model th tl
thermal_c th, tl
{
ctherm.ctherm1 th 6 =8e−4
ctherm.ctherm2 6 5 =1e−3
ctherm.ctherm3 5 4 =2.5e−3
ctherm.ctherm4 4 3 =2.6e−3
ctherm.ctherm5 3 2 =8e−3
ctherm.ctherm6 2 tl =1.5e−2

rtherm.rtherm1 th 6 =1.44e−1
rtherm.rtherm2 6 5 =1.9e−1
rtherm.rtherm3 5 4 =3.0e−1
rtherm.rtherm4 4 3 =4.0e−1
rtherm.rtherm5 3 2 =5.7e−1
rtherm.rtherm6 2 tl =5.8e−1
}
```

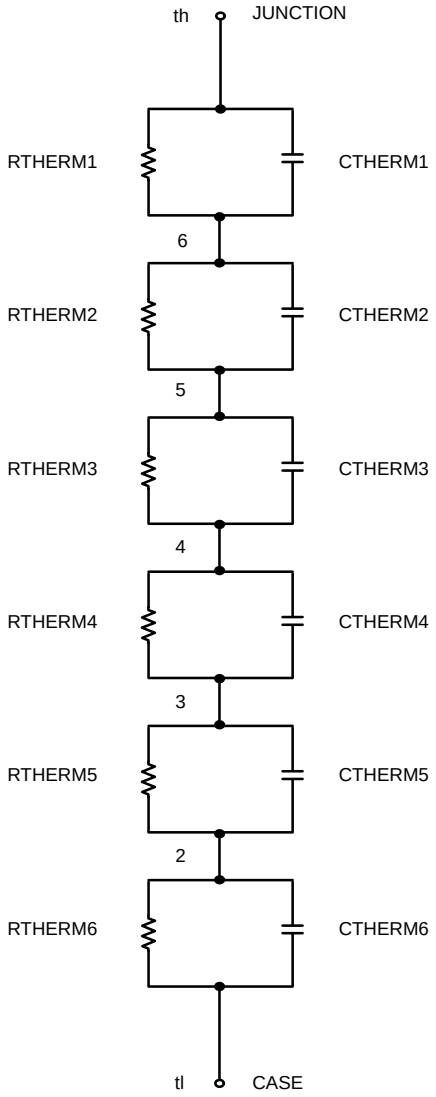

Figure 24.

PACKAGE MARKING AND ORDERING INFORMATION

Device	Device Marking	Package Type	Reel Size	Tape Width	Shipping†
FDD8880	FDD8880	DPAK3 (TO−252 3 LD) (TO−252AA) (Pb−Free)	13”	16 mm	2500 / Tape & Reel

DISCONTINUED (Note 3)

FDD8880−G	FDD8880	DPAK3 (TO−252 3 LD) (TO−252AA) (Pb−Free)	13”	16 mm	2500 / Tape & Reel

†For information on tape and reel specifications, including part orientation and tape sizes, please refer to our Tape and Reel Packaging Specifications Brochure, BRD8011/D.

3. **DISCONTINUED:** This device is not recommended for new design. Please contact your **onsemi** representative for information. The most current information on this device may be available on www.onsemi.com.

POWERTRENCH is registered trademark of Semiconductor Components Industries, LLC dba “**onsemi**” or its affiliates and/or subsidiaries in the United States and/or other countries.

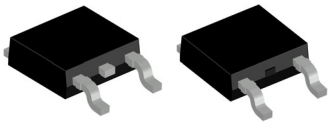

DPAK3 6.10x6.54x2.29, 4.57P
CASE 369AS
ISSUE B

DATE 20 DEC 2023

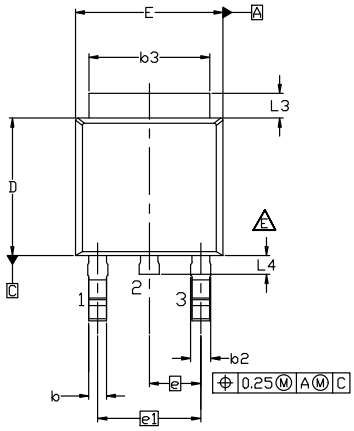

NON-DIODE PRODUCTS VERSION

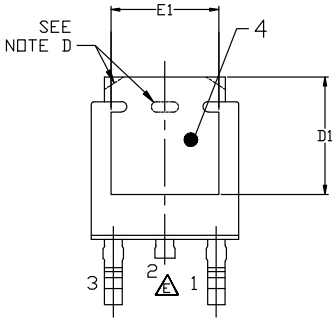

NON-DIODE PRODUCTS VERSION

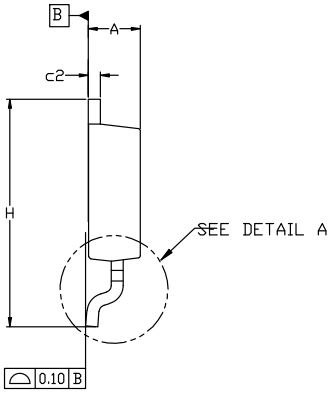

NOTES: UNLESS OTHERWISE SPECIFIED
A) THIS PACKAGE CONFORMS TO JEDEC, TO-252, ISSUE F, VARIATION AA.
B) ALL DIMENSIONS ARE IN MILLIMETERS.
C) DIMENSIONING AND TOLERANCING PER ASME Y14.5M-2018.
D) SUPPLIER DEPENDENT MOLD LOCKING HOLES OR CHAMFERED CORNERS OR EDGE PROTRUSION.
E) FOR DIODE PRODUCTS, L4 IS 0.25 MM MAX PLASTIC BODY STUB WITHOUT CENTER LEAD.
F) DIMENSIONS ARE EXCLUSIVE OF BURRS, MOLD FLASH AND TIE BAR EXTRUSIONS.
G) LAND PATTERN RECOMMENDATION IS BASED ON IPC7351A STD TO228P991X239-3N.

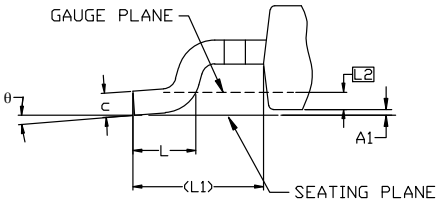

DETAIL A
(ROTATED -90°)
SCALE: 12X

DIM	MILLIMETERS		
	MIN.	NOM.	MAX.
A	2.18	2.29	2.39
A1	0.00	–	0.127
b	0.64	0.77	0.89
b2	0.76	0.95	1.14
b3	5.21	5.34	5.46
c	0.45	0.53	0.61
c2	0.45	0.52	0.58
D	5.97	6.10	6.22
D1	5.21	---	---
E	6.35	6.54	6.73
E1	4.32	---	---
e	2.286 BSC		
e1	4.572 BSC		
H	9.40	9.91	10.41
L	1.40	1.59	1.78
L1	2.90 REF		
L2	0.51 BSC		
L3	0.89	1.08	1.27
L4	---	---	1.02
θ	0°	---	10°

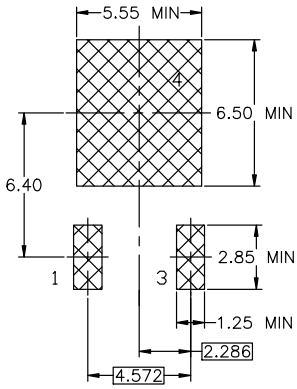

LAND PATTERN RECOMMENDATION

*FOR ADDITIONAL INFORMATION ON OUR PB-FREE STRATEGY AND SOLDERING DETAILS, PLEASE DOWNLOAD THE ON SEMICONDUCTOR SOLDERING AND MOUNTING TECHNIQUES REFERENCE MANUAL, SOLDERRM/D.

GENERIC MARKING DIAGRAM*

*This information is generic. Please refer to device data sheet for actual part marking. Pb-Free indicator, "G" or microdot "▪", may or may not be present. Some products may not follow the Generic Marking.

XXXX = Specific Device Code
A = Assembly Location
Y = Year
WW = Work Week
ZZ = Assembly Lot Code

DOCUMENT NUMBER:	98AON13810G	Electronic versions are uncontrolled except when accessed directly from the Document Repository. Printed versions are uncontrolled except when stamped "CONTROLLED COPY" in red.
DESCRIPTION:	DPAK3 6.10x6.54x2.29, 4.57P	PAGE 1 OF 1

onsemi and onsemi are trademarks of Semiconductor Components Industries, LLC dba **onsemi** or its subsidiaries in the United States and/or other countries. **onsemi** reserves the right to make changes without further notice to any products herein. **onsemi** makes no warranty, representation or guarantee regarding the suitability of its products for any particular purpose, nor does **onsemi** assume any liability arising out of the application or use of any product or circuit, and specifically disclaims any and all liability, including without limitation special, consequential or incidental damages. **onsemi** does not convey any license under its patent rights nor the rights of others.

onsemi, onsemi, and other names, marks, and brands are registered and/or common law trademarks of Semiconductor Components Industries, LLC dba "**onsemi**" or its affiliates and/or subsidiaries in the United States and/or other countries. **onsemi** owns the rights to a number of patents, trademarks, copyrights, trade secrets, and other intellectual property. A listing of **onsemi**'s product/patent coverage may be accessed at www.onsemi.com/site/pdf/Patent−Marking.pdf. **onsemi** reserves the right to make changes at any time to any products or information herein, without notice. The information herein is provided "as−is" and **onsemi** makes no warranty, representation or guarantee regarding the accuracy of the information, product features, availability, functionality, or suitability of its products for any particular purpose, nor does **onsemi** assume any liability arising out of the application or use of any product or circuit, and specifically disclaims any and all liability, including without limitation special, consequential or incidental damages. Buyer is responsible for its products and applications using **onsemi** products, including compliance with all laws, regulations and safety requirements or standards, regardless of any support or applications information provided by **onsemi**. "Typical" parameters which may be provided in **onsemi** data sheets and/or specifications can and do vary in different applications and actual performance may vary over time. All operating parameters, including "Typicals" must be validated for each customer application by customer's technical experts. **onsemi** does not convey any license under any of its intellectual property rights nor the rights of others. **onsemi** products are not designed, intended, or authorized for use as a critical component in life support systems or any FDA Class 3 medical devices or medical devices with a same or similar classification in a foreign jurisdiction or any devices intended for implantation in the human body. Should Buyer purchase or use **onsemi** products for any such unintended or unauthorized application, Buyer shall indemnify and hold **onsemi** and its officers, employees, subsidiaries, affiliates, and distributors harmless against all claims, costs, damages, and expenses, and reasonable attorney fees arising out of, directly or indirectly, any claim of personal injury or death associated with such unintended or unauthorized use, even if such claim alleges that **onsemi** was negligent regarding the design or manufacture of the part. **onsemi** is an Equal Opportunity/Affirmative Action Employer. This literature is subject to all applicable copyright laws and is not for resale in any manner.

ADDITIONAL INFORMATION

TECHNICAL PUBLICATIONS:
Technical Library: www.onsemi.com/design/resources/technical−documentation
onsemi Website: www.onsemi.com

ONLINE SUPPORT: www.onsemi.com/support
For additional information, please contact your local Sales Representative at
www.onsemi.com/support/sales