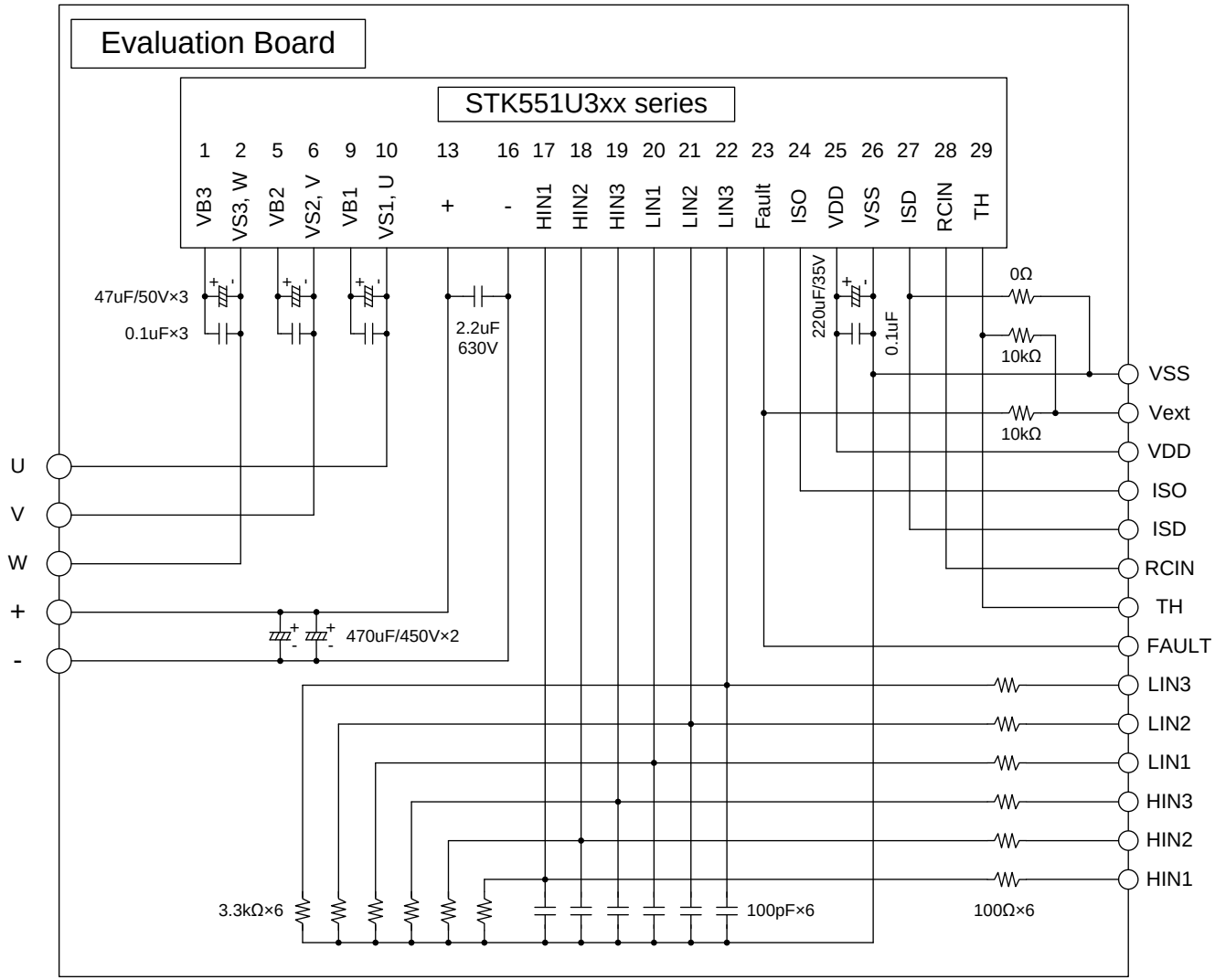Schematic for the STK551U3A2AGEVB Evaluation Board