ON Semiconductor
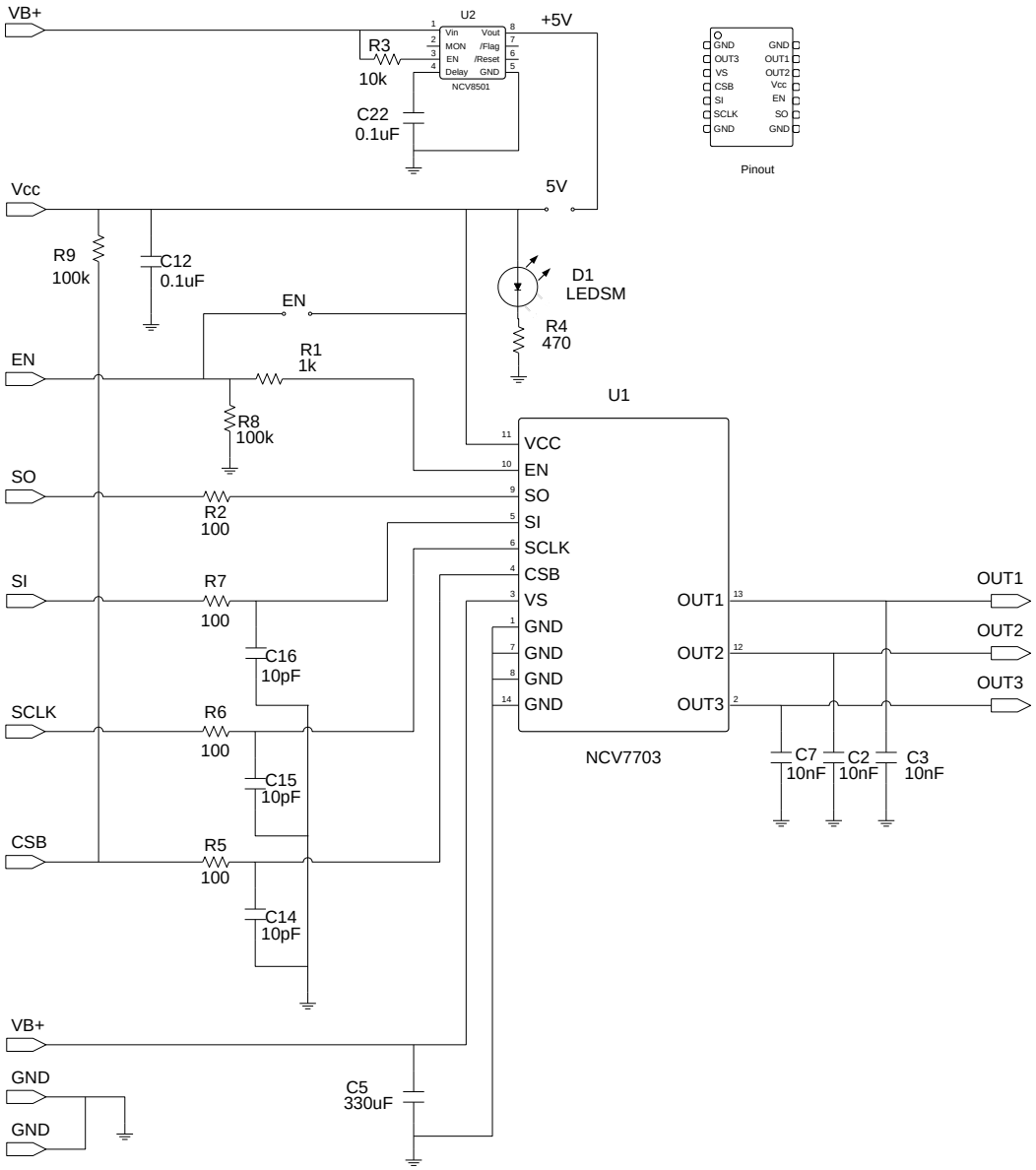
Schematic for the NCP7703GEVB Evaluation Board