Ultrafast Dual Diode
30 A, 200 V

RURG1520CC

ON Semiconductor®

www.onsemi.com

Description

The RURG1520CC is an ultrafast dual diode with low forward voltage drop. This device is intended for use as freewheeling and clamping diodes in a variety of switching power supplies and other power switching applications. It is specially suited for use in switching power supplies and industrial application.

Features

- Ultrafast Recovery t_{rr} = 35 ns (@ I_F = 15 A)
- Max Forward Voltage, V_F = 1.05 V (@ T_C = 25°C)
- Reverse Voltage, V_{RRM} = 200 V
- Avalanche Energy Rated
- This Device is Pb−Free and is RoHS Compliant

Applications

- Switching Power Supplies
- Power Switching Circuits
- General Purpose

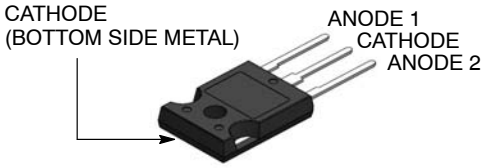

TO−247−3LD
CASE 340CK

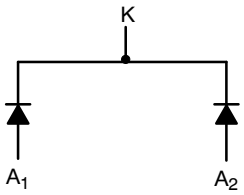

MARKING DIAGRAM

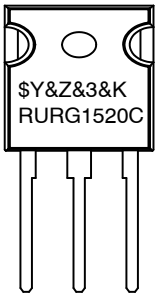

$Y	= ON Semiconductor Logo
&Z	= Assembly Plant Code
&3	= Numeric Date Code
&K	= Lot Code
RURG1520C	= Specific Device Code

ORDERING INFORMATION

See detailed ordering and shipping information on page 2 of this data sheet.

© Semiconductor Components Industries, LLC, 2001

ABSOLUTE MAXIMUM RATINGS (Per Leg) (T_C = 25°C)

Parameter	Symbol	Ratings	Unit
Peak Repetitive Reverse Voltage	V_{RRM}	200	V
Working Peak Reverse Voltage	V_{RWM}	200	V
DC Blocking Voltage	V_R	200	V
Average Rectified Forward Current (T_C = 157°C)	$I_{F(AV)}$	15	A
Repetitive Peak Surge Current (Square Wave, 20 kHz)	I_{FRM}	30	A
Nonrepetitive Peak Surge Current (Halfwave, 1 Phase, 60 Hz)	I_{FSM}	200	A
Maximum Power Dissipation	P_D	100	W
Avalanche Energy (See Figures 7 and 8)	E_{AVL}	20	mJ
Operating and Storage Temperature	T_{STG}, T_J	−65 to 175	°C

Stresses exceeding those listed in the Maximum Ratings table may damage the device. If any of these limits are exceeded, device functionality should not be assumed, damage may occur and reliability may be affected.

PACKAGE MARKING AND ORDERING INFORMATION

Device	Device Marking	Package	Shipping
RURG1520CC	RURG1520C	TO−247−3LD	450 / Tube

ELECTRICAL CHARACTERISTICS (Per Leg) (T_C = 25°C, unless otherwise specified)

Parameter	Symbol	Test Conditions	Min	Typ	Max	Unit
Instantaneous Forward Voltage (Pulse Width = 300 μs, Duty Cycle = 2%)	V_F	I_F = 15 A	–	–	1.05	V
		I_F = 15 A, T_C = 150°C	–	–	0.85	V
Reverse Leakage (Instantaneous Reverse Current)	I_R	V_R = 200 V	–	–	100	μA
		V_R = 200 V, T_C = 150°C	–	–	500	μA
Reverse Recovery Time (See Figure 6) Summation of $t_a + t_b$	t_{rr}	I_F = 1 A, dI_F/dt = 100 A/μs	–	–	30	ns
		I_F = 15 A, dI_F/dt = 100 A/μs	–	–	35	ns
Time to Reach Peak Reverse Current (See Figure 6)	t_a	I_F = 15 A, dI_F/dt = 100 A/μs	–	20	–	ns
Time from Peak I_{RM} to Projected Zero Crossing of I_{RM} Based on a Straight Line from Peak I_{RM} through 25% of I_{RM} (See Figure 6)	t_b	I_F = 15 A, dI_F/dt = 100 A/μs	–	10	–	ns
Thermal Resistance Junction to Case	$R_{\theta JC}$		–	–	1.5	°C/W

Product parametric performance is indicated in the Electrical Characteristics for the listed test conditions, unless otherwise noted. Product performance may not be indicated by the Electrical Characteristics if operated under different conditions.

TYPICAL PERFORMANCE CURVES

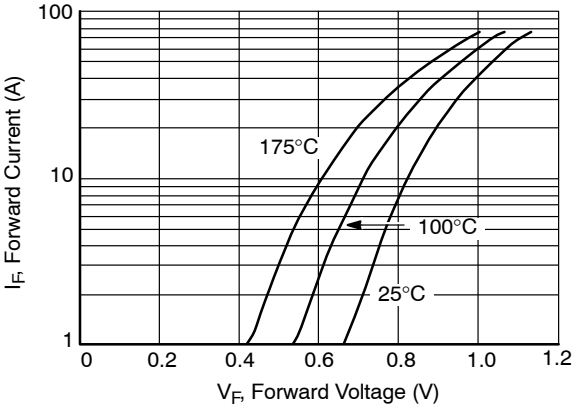

Figure 1. Forward Current vs. Forward Voltage

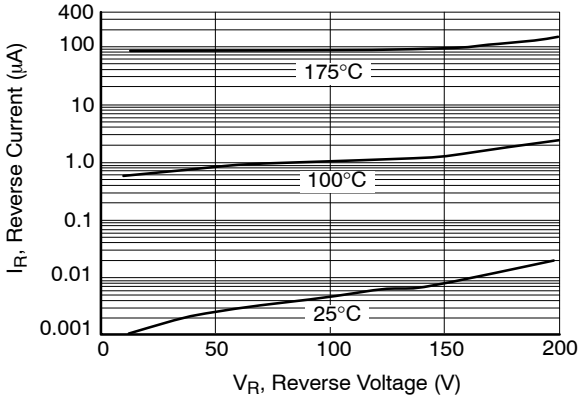

Figure 2. Reverse Current vs. Reverse Voltage

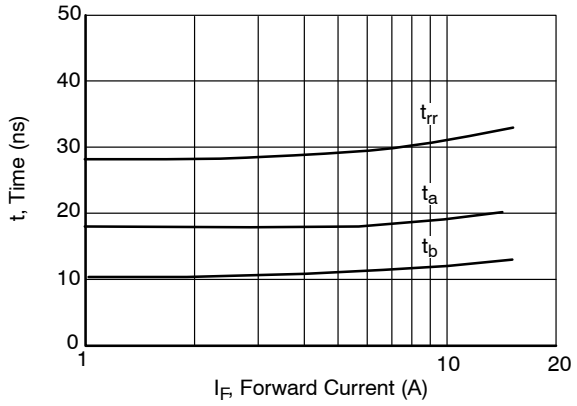

Figure 3. t_{rr}, t_a and t_b Curves vs. Forward Current

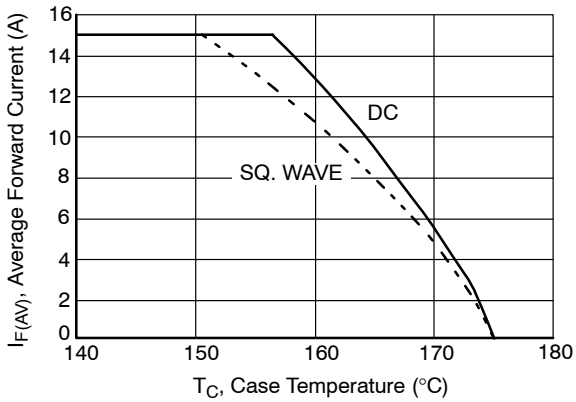

Figure 4. Current Derating Curve

TEST CIRCUITS AND WAVEFORMS

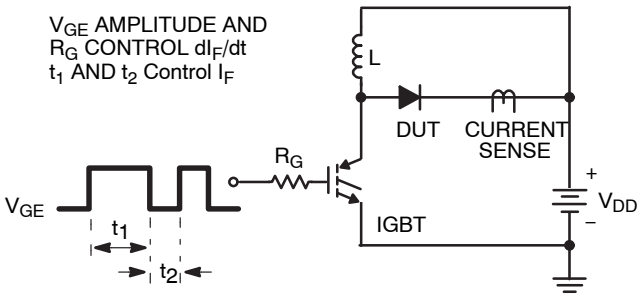

Figure 5. t_{rr} Test Circuit

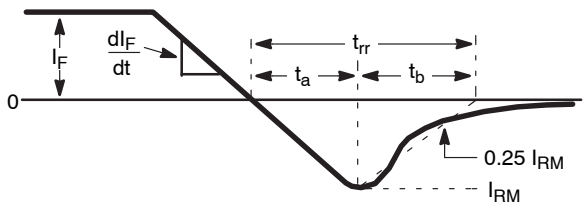

Figure 6. t_{rr} Waveforms and Definitions

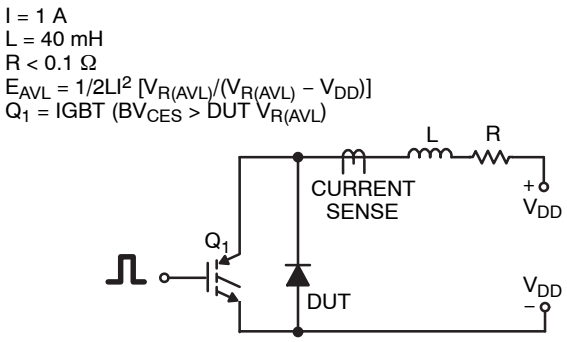

Figure 7. Avalanche Energy Test Circuit

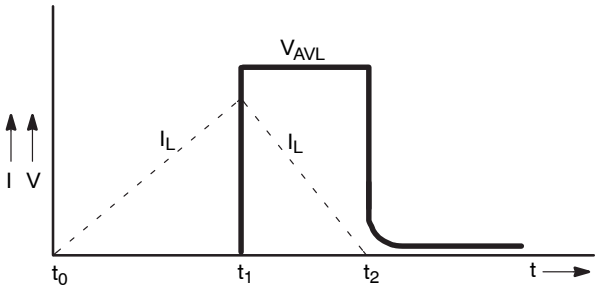

Figure 8. Avalanche Current and Voltage Waveforms

TO−247−3LD SHORT LEAD
CASE 340CK
ISSUE A

DATE 31 JAN 2019

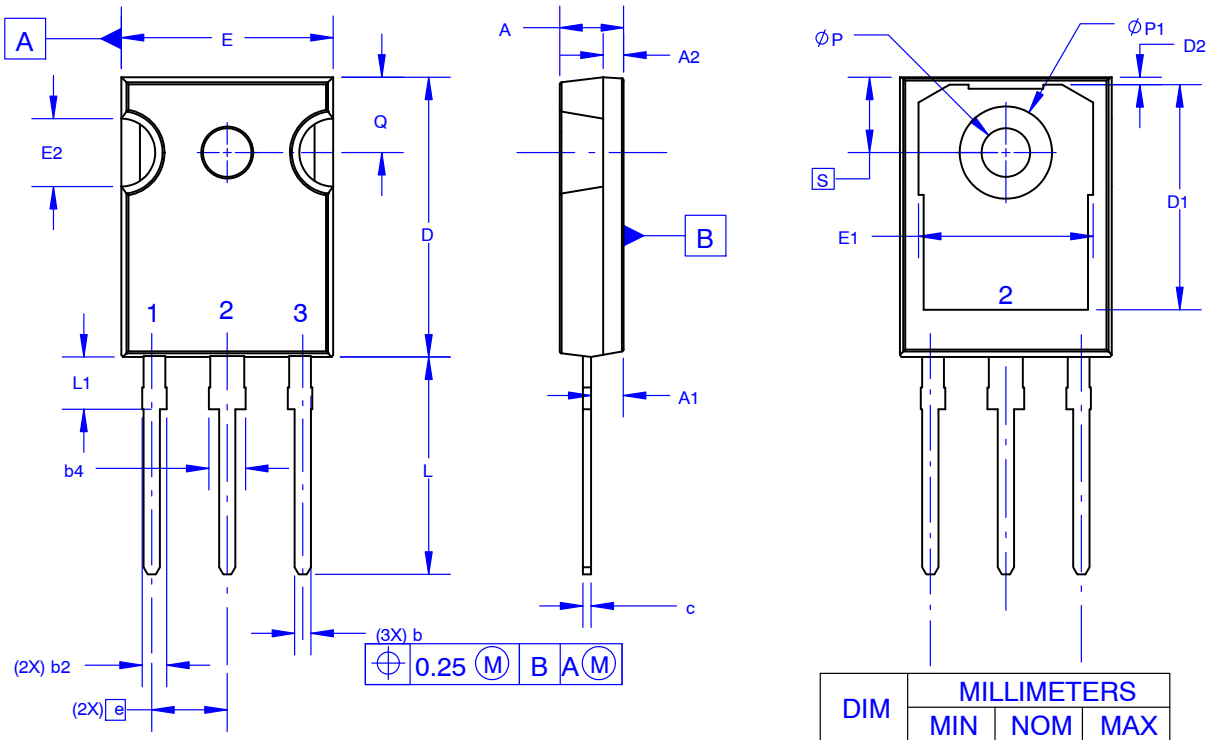

DIM	MILLIMETERS		
	MIN	NOM	MAX
A	4.58	4.70	4.82
A1	2.20	2.40	2.60
A2	1.40	1.50	1.60
b	1.17	1.26	1.35
b2	1.53	1.65	1.77
b4	2.42	2.54	2.66
c	0.51	0.61	0.71
D	20.32	20.57	20.82
D1	13.08	~	~
D2	0.51	0.93	1.35
E	15.37	15.62	15.87
E1	12.81	~	~
E2	4.96	5.08	5.20
e	~	5.56	~
L	15.75	16.00	16.25
L1	3.69	3.81	3.93
ØP	3.51	3.58	3.65
ØP1	6.60	6.80	7.00
Q	5.34	5.46	5.58
S	5.34	5.46	5.58

NOTES: UNLESS OTHERWISE SPECIFIED.

A. DIMENSIONS ARE EXCLUSIVE OF BURRS, MOLD FLASH, AND TIE BAR EXTRUSIONS.
B. ALL DIMENSIONS ARE IN MILLIMETERS.
C. DRAWING CONFORMS TO ASME Y14.5 - 2009.
D. DIMENSION A1 TO BE MEASURED IN THE REGION DEFINED BY L1.
E. LEAD FINISH IS UNCONTROLLED IN THE REGION DEFINED BY L1.

GENERIC MARKING DIAGRAM*

AYWWZZ
XXXXXXX
XXXXXXX
o

XXXX = Specific Device Code
A = Assembly Location
Y = Year
WW = Work Week
ZZ = Assembly Lot Code

*This information is generic. Please refer to device data sheet for actual part marking. Pb−Free indicator, "G" or microdot "▪", may or may not be present. Some products may not follow the Generic Marking.

DOCUMENT NUMBER:	98AON13851G	Electronic versions are uncontrolled except when accessed directly from the Document Repository. Printed versions are uncontrolled except when stamped "CONTROLLED COPY" in red.
DESCRIPTION:	TO−247−3LD SHORT LEAD	PAGE 1 OF 1

onsemi and onsemi are trademarks of Semiconductor Components Industries, LLC dba **onsemi** or its subsidiaries in the United States and/or other countries. **onsemi** reserves the right to make changes without further notice to any products herein. **onsemi** makes no warranty, representation or guarantee regarding the suitability of its products for any particular purpose, nor does **onsemi** assume any liability arising out of the application or use of any product or circuit, and specifically disclaims any and all liability, including without limitation special, consequential or incidental damages. **onsemi** does not convey any license under its patent rights nor the rights of others.

onsemi, onsemi, and other names, marks, and brands are registered and/or common law trademarks of Semiconductor Components Industries, LLC dba "**onsemi**" or its affiliates and/or subsidiaries in the United States and/or other countries. **onsemi** owns the rights to a number of patents, trademarks, copyrights, trade secrets, and other intellectual property. A listing of **onsemi**'s product/patent coverage may be accessed at www.onsemi.com/site/pdf/Patent−Marking.pdf. **onsemi** reserves the right to make changes at any time to any products or information herein, without notice. The information herein is provided "as−is" and **onsemi** makes no warranty, representation or guarantee regarding the accuracy of the information, product features, availability, functionality, or suitability of its products for any particular purpose, nor does **onsemi** assume any liability arising out of the application or use of any product or circuit, and specifically disclaims any and all liability, including without limitation special, consequential or incidental damages. Buyer is responsible for its products and applications using **onsemi** products, including compliance with all laws, regulations and safety requirements or standards, regardless of any support or applications information provided by **onsemi**. "Typical" parameters which may be provided in **onsemi** data sheets and/or specifications can and do vary in different applications and actual performance may vary over time. All operating parameters, including "Typicals" must be validated for each customer application by customer's technical experts. **onsemi** does not convey any license under any of its intellectual property rights nor the rights of others. **onsemi** products are not designed, intended, or authorized for use as a critical component in life support systems or any FDA Class 3 medical devices or medical devices with a same or similar classification in a foreign jurisdiction or any devices intended for implantation in the human body. Should Buyer purchase or use **onsemi** products for any such unintended or unauthorized application, Buyer shall indemnify and hold **onsemi** and its officers, employees, subsidiaries, affiliates, and distributors harmless against all claims, costs, damages, and expenses, and reasonable attorney fees arising out of, directly or indirectly, any claim of personal injury or death associated with such unintended or unauthorized use, even if such claim alleges that **onsemi** was negligent regarding the design or manufacture of the part. **onsemi** is an Equal Opportunity/Affirmative Action Employer. This literature is subject to all applicable copyright laws and is not for resale in any manner.

ADDITIONAL INFORMATION

TECHNICAL PUBLICATIONS:
Technical Library: www.onsemi.com/design/resources/technical−documentation
onsemi Website: www.onsemi.com

ONLINE SUPPORT: www.onsemi.com/support
For additional information, please contact your local Sales Representative at
www.onsemi.com/support/sales