Ultrafast Power Rectifier

6 A, 600 V

RURD660S9A-F085

The RURD660S9A−F085 is an ultrafast diode with soft recovery characteristics (trr < 83 ns). It has a low forward voltage drop and is of silicon nitride passivated ion−implanted epitaxial planar construction. This device is intended for use as a freewheeling/clamping diode and rectifier in a variety of switching power supplies and other power switching applications. Its low stored charge and ultrafast soft recovery minimize ringing and electrical noise in many power switching circuits, thus reducing powerloss in the switching transistors.

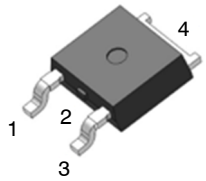

DPAK3 (TO−252 3 LD)
CASE 369AS

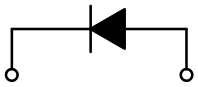

1, 2, 4. Cathode 3. Anode

Features

- High Speed Switching (t_{rr} = 63 ns (Typ.) @ I_F = 6 A)
- Low Forward Voltage (V_F = 1.26 V (Typ.) @ I_F = 6 A)
- Avalanche Energy Rated
- AEC−Q101 Qualified and PPAP Capable
- This is a Pb−Free Device

Applications

- General Purpose
- Switching Mode Power Supply
- Power Switching Circuits

MARKING DIAGRAM

RUR660 = Specific Device Code
$Y = **onsemi** Logo
&Z = Assembly Plant Code
&3 = 3−Digit Date Code
&K = 2−Digits Lot Run Traceability Code

ORDERING INFORMATION

See detailed ordering and shipping information on page 4 of this data sheet.

ABSOLUTE MAXIMUM RATINGS (T_C = 25°C unless otherwise noted)

Symbol	Parameter	Ratings	Unit
V_{RRM}	Peak Repetitive Reverse Voltage	600	V
V_{RWM}	Working Peak Reverse Voltage	600	V
V_R	DC Blocking Voltage	600	V
$I_{F(AV)}$	Average Rectified Forward Current @ T_C = 25°C	6	A
I_{FSM}	Non−repetitive Peak Surge Current	60	A
T_J, T_{STG}	Operating Junction and Storage Temperature	− 55 to +175	°C

Stresses exceeding those listed in the Maximum Ratings table may damage the device. If any of these limits are exceeded, device functionality should not be assumed, damage may occur and reliability may be affected.

THERMAL CHARACTERISTICS (T_C = 25°C unless otherwise noted)

Symbol	Parameter	Max	Unit
$R_{\theta JC}$	Maximum Thermal Resistance, Junction to Case	3	°C/W
$R_{\theta JA}$ (Note 1)	Maximum Thermal Resistance, Junction to Ambient	140	°C/W
$R_{\theta JA}$ (Note 2)	Maximum Thermal Resistance, Junction to Ambient	50	°C/W

1. Mounted on a minimum pad follow by JEDEC standard.
2. Mounted on a 1 in^2 pad of 2 oz copper follow by JEDEC standard.

© Semiconductor Components Industries, LLC, 2013

ELECTRICAL CHARACTERISTICS (T_C = 25°C unless otherwise noted)

Symbol	Parameter	Condition		Min	Typ	Max	Unit
I_R	Instantaneous Reverse Current	V_R = 600 V	T_C = 25°C	–	–	100	μA
			T_C = 175°	–	–	500	μA
V_{FM} (Note 3)	Instantaneous Forward Voltage	I_F = 6 A	T_C = 25°C T_C = 175°	– –	1.26 1.04	1.5 –	V V
t_{rr} (Note 4)	Reverse Recovery Time	I_F = 1 A, di/dt = 200 A/μs, V_{CC} = 390 V	T_C = 25°C	–	25	33	ns
		I_F = 6 A, di/dt = 200 A/μs, V_{CC} = 390 V	T_C = 25°C T_C = 175°	– –	63 119	83 –	ns ns
t_a t_b Qrr	Reverse Recovery Time Reverse Recovery Charge	I_F = 6 A, di/dt = 200 A/μs, V_{CC} = 390 V	T_C = 25°C	– – –	23 40 151	– – –	ns ns nC
W_{AVL}		Avalanche Energy (L = 20 mH)		10	–	–	mJ

Product parametric performance is indicated in the Electrical Characteristics for the listed test conditions, unless otherwise noted. Product performance may not be indicated by the Electrical Characteristics if operated under different conditions.

3. Pulse: Test Pulse width = 300 μs, Duty Cycle = 2%
4. Guaranteed by design

TEST CIRCUIT AND WAVEFORMS

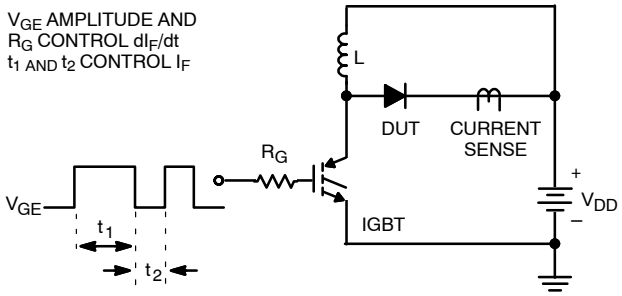

Figure 1. t_{rr} Test Circuit

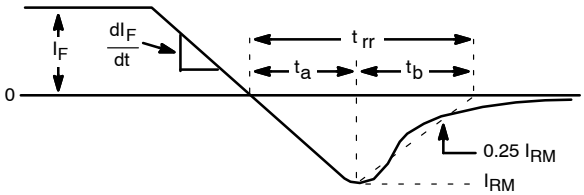

Figure 2. trr Waveforms and Definitions

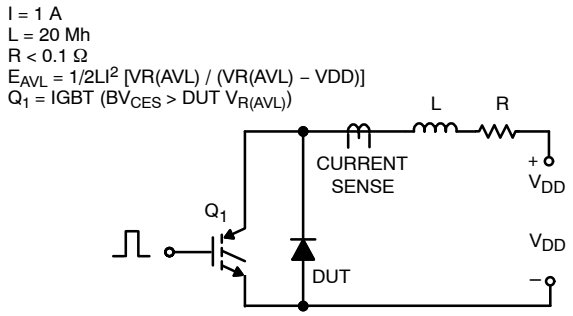

Figure 3. Avalanche Energy Test Circuit

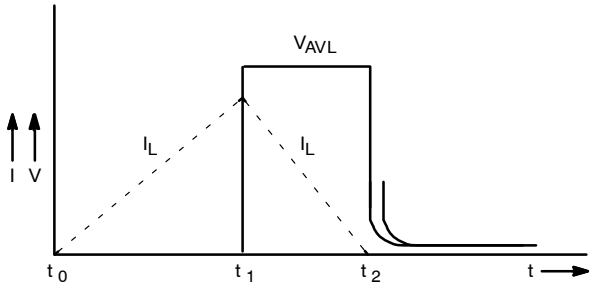

Figure 4. Avalanche Current and Voltage Waveforms

TYPICAL PERFORMANCE CHARACTERISTICS

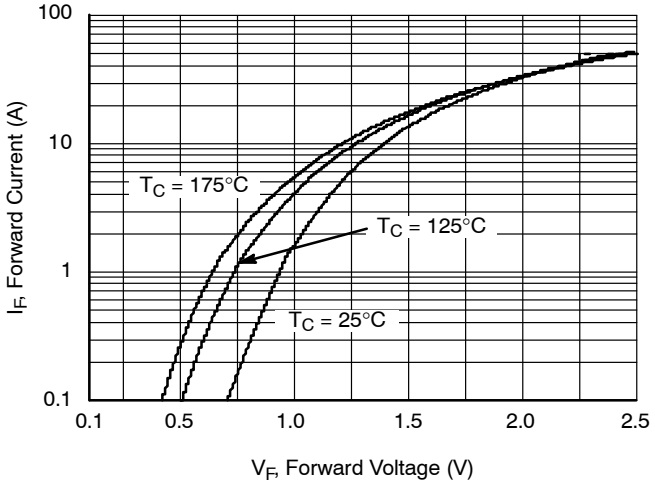

Figure 9. Typical Forward Voltage Drop vs. Forward Current

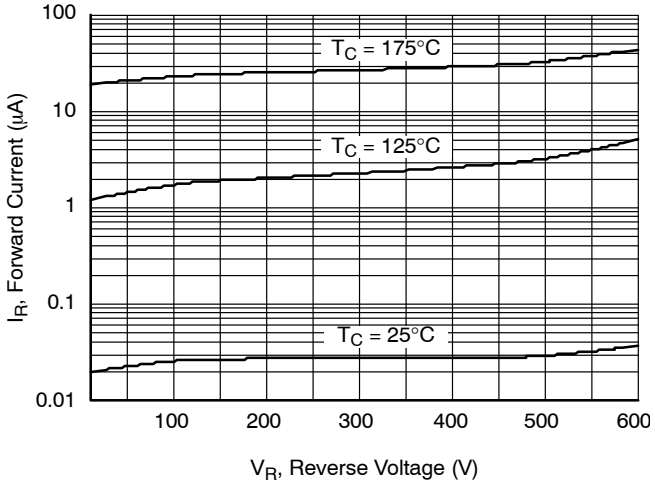

Figure 10. Typical Reverse Current vs. Reverse Voltage

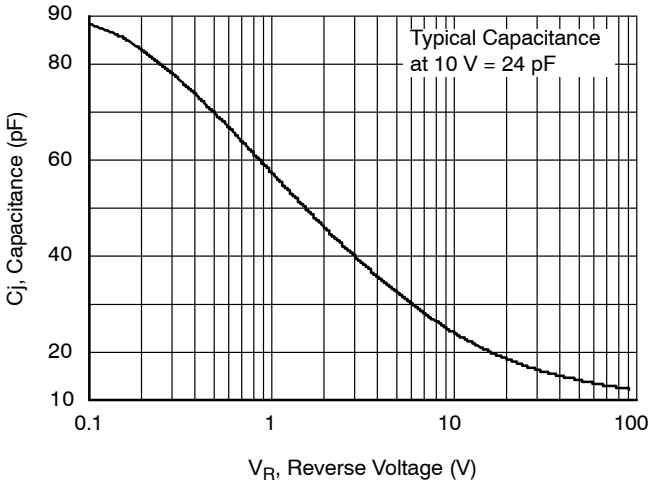

Figure 5. Typical Junction Capacitance

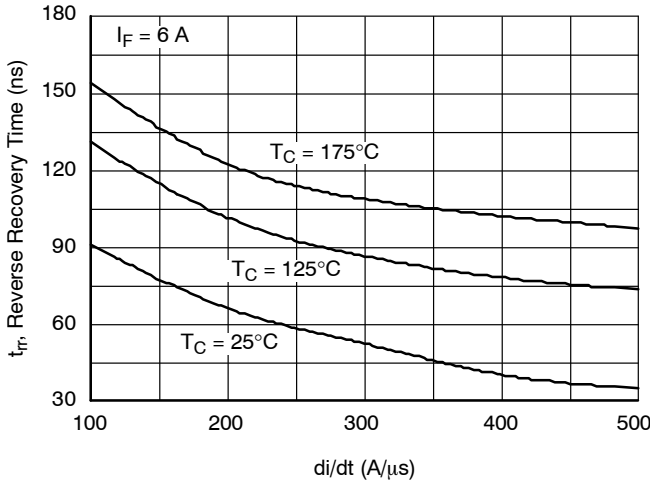

Figure 6. Typical Reverse Recovery Time vs. di/dt

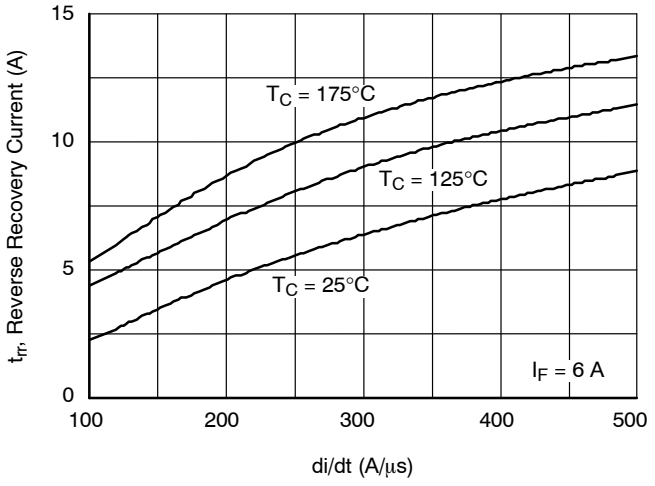

Figure 7. Typical Reverse Recovery Current vs. di/dt

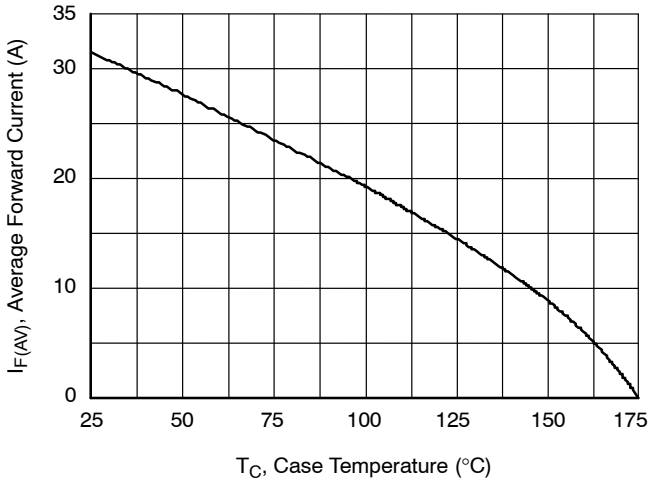

Figure 8. Forward Current Derating Curve

TYPICAL PERFORMANCE CHARACTERISTICS (continued)

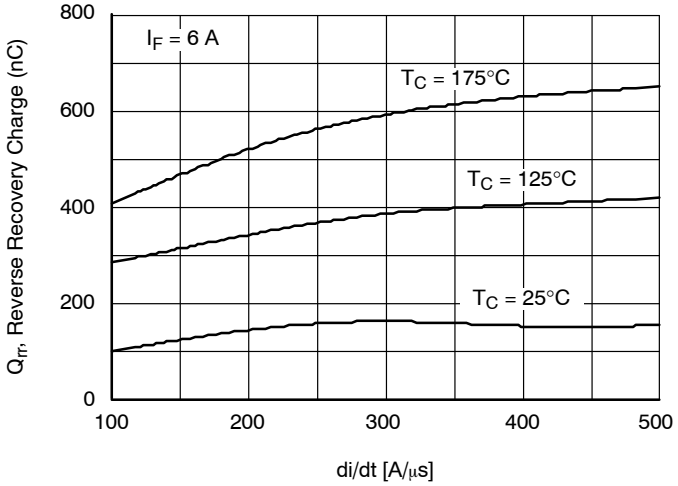

Figure 12. Reverse Recovery Charge

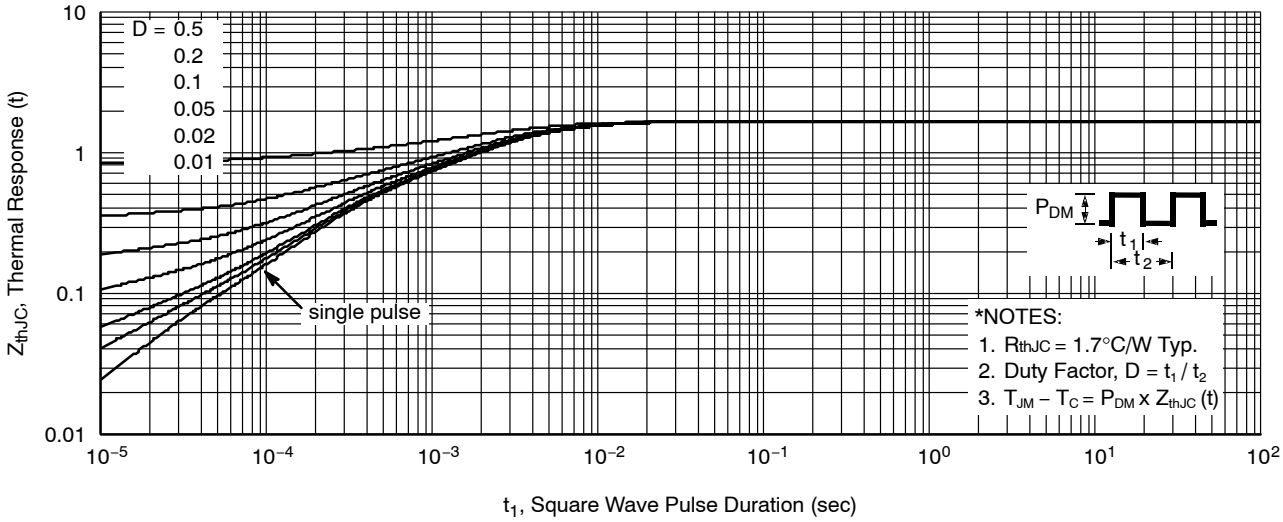

Figure 11. Transient Thermal Response Curve

ORDERING INFORMATION

Device	Device Marking	Package	Shipping†
RURD660S9A−F085	RUR660	TO−252 3 LD (Pb−Free)	2500 / Tape & Reel

†For information on tape and reel specifications, including part orientation and tape sizes, please refer to our Tape and Reel Packaging Specifications Brochure, BRD8011/D.

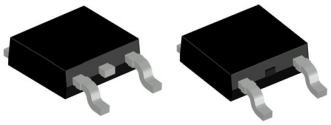

DPAK3 6.10x6.54x2.29, 4.57P
CASE 369AS
ISSUE B

DATE 20 DEC 2023

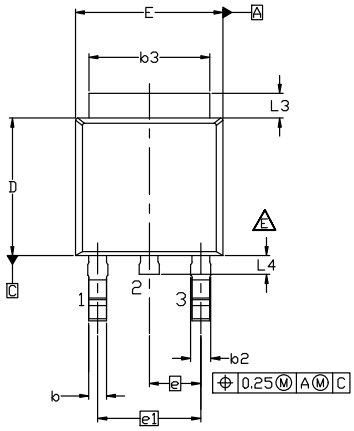

NON-DIODE PRODUCTS VERSION

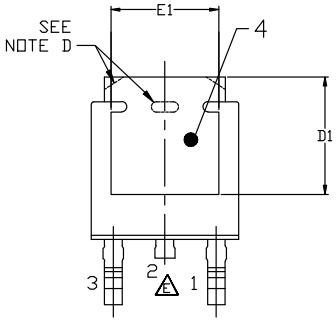

NON-DIODE PRODUCTS VERSION

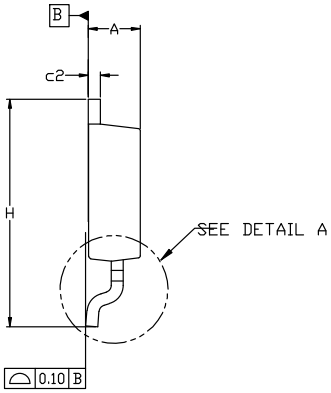

NOTES: UNLESS OTHERWISE SPECIFIED
A) THIS PACKAGE CONFORMS TO JEDEC, TO-252, ISSUE F, VARIATION AA.
B) ALL DIMENSIONS ARE IN MILLIMETERS.
C) DIMENSIONING AND TOLERANCING PER ASME Y14.5M-2018.
D) SUPPLIER DEPENDENT MOLD LOCKING HOLES OR CHAMFERED CORNERS OR EDGE PROTRUSION.
E) FOR DIODE PRODUCTS, L4 IS 0.25 MM MAX PLASTIC BODY STUB WITHOUT CENTER LEAD.
F) DIMENSIONS ARE EXCLUSIVE OF BURRS, MOLD FLASH AND TIE BAR EXTRUSIONS.
G) LAND PATTERN RECOMMENDATION IS BASED ON IPC7351A STD TO228P991X239-3N.

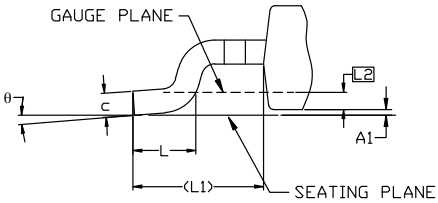

DETAIL A
(ROTATED -90°)
SCALE: 12X

DIM	MILLIMETERS		
	MIN.	NOM.	MAX.
A	2.18	2.29	2.39
A1	0.00	–	0.127
b	0.64	0.77	0.89
b2	0.76	0.95	1.14
b3	5.21	5.34	5.46
c	0.45	0.53	0.61
c2	0.45	0.52	0.58
D	5.97	6.10	6.22
D1	5.21	---	---
E	6.35	6.54	6.73
E1	4.32	---	---
e	2.286 BSC		
e1	4.572 BSC		
H	9.40	9.91	10.41
L	1.40	1.59	1.78
L1	2.90 REF		
L2	0.51 BSC		
L3	0.89	1.08	1.27
L4	---	---	1.02
θ	0°	---	10°

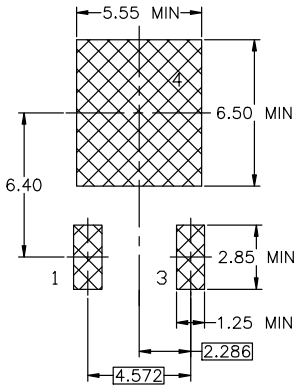

LAND PATTERN RECOMMENDATION

*FOR ADDITIONAL INFORMATION ON OUR PB-FREE STRATEGY AND SOLDERING DETAILS, PLEASE DOWNLOAD THE ON SEMICONDUCTOR SOLDERING AND MOUNTING TECHNIQUES REFERENCE MANUAL, SOLDERRM/D.

GENERIC MARKING DIAGRAM*

*This information is generic. Please refer to device data sheet for actual part marking. Pb-Free indicator, "G" or microdot "▪", may or may not be present. Some products may not follow the Generic Marking.

XXXX = Specific Device Code
A = Assembly Location
Y = Year
WW = Work Week
ZZ = Assembly Lot Code

DOCUMENT NUMBER:	98AON13810G	Electronic versions are uncontrolled except when accessed directly from the Document Repository. Printed versions are uncontrolled except when stamped "CONTROLLED COPY" in red.
DESCRIPTION:	DPAK3 6.10x6.54x2.29, 4.57P	PAGE 1 OF 1

onsemi and onsemi are trademarks of Semiconductor Components Industries, LLC dba **onsemi** or its subsidiaries in the United States and/or other countries. **onsemi** reserves the right to make changes without further notice to any products herein. **onsemi** makes no warranty, representation or guarantee regarding the suitability of its products for any particular purpose, nor does **onsemi** assume any liability arising out of the application or use of any product or circuit, and specifically disclaims any and all liability, including without limitation special, consequential or incidental damages. **onsemi** does not convey any license under its patent rights nor the rights of others.

onsemi, onsemi, and other names, marks, and brands are registered and/or common law trademarks of Semiconductor Components Industries, LLC dba "**onsemi**" or its affiliates and/or subsidiaries in the United States and/or other countries. **onsemi** owns the rights to a number of patents, trademarks, copyrights, trade secrets, and other intellectual property. A listing of **onsemi**'s product/patent coverage may be accessed at www.onsemi.com/site/pdf/Patent−Marking.pdf. **onsemi** reserves the right to make changes at any time to any products or information herein, without notice. The information herein is provided "as−is" and **onsemi** makes no warranty, representation or guarantee regarding the accuracy of the information, product features, availability, functionality, or suitability of its products for any particular purpose, nor does **onsemi** assume any liability arising out of the application or use of any product or circuit, and specifically disclaims any and all liability, including without limitation special, consequential or incidental damages. Buyer is responsible for its products and applications using **onsemi** products, including compliance with all laws, regulations and safety requirements or standards, regardless of any support or applications information provided by **onsemi**. "Typical" parameters which may be provided in **onsemi** data sheets and/or specifications can and do vary in different applications and actual performance may vary over time. All operating parameters, including "Typicals" must be validated for each customer application by customer's technical experts. **onsemi** does not convey any license under any of its intellectual property rights nor the rights of others. **onsemi** products are not designed, intended, or authorized for use as a critical component in life support systems or any FDA Class 3 medical devices or medical devices with a same or similar classification in a foreign jurisdiction or any devices intended for implantation in the human body. Should Buyer purchase or use **onsemi** products for any such unintended or unauthorized application, Buyer shall indemnify and hold **onsemi** and its officers, employees, subsidiaries, affiliates, and distributors harmless against all claims, costs, damages, and expenses, and reasonable attorney fees arising out of, directly or indirectly, any claim of personal injury or death associated with such unintended or unauthorized use, even if such claim alleges that **onsemi** was negligent regarding the design or manufacture of the part. **onsemi** is an Equal Opportunity/Affirmative Action Employer. This literature is subject to all applicable copyright laws and is not for resale in any manner.

ADDITIONAL INFORMATION

TECHNICAL PUBLICATIONS:
Technical Library: www.onsemi.com/design/resources/technical−documentation
onsemi Website: www.onsemi.com

ONLINE SUPPORT: www.onsemi.com/support
For additional information, please contact your local Sales Representative at
www.onsemi.com/support/sales