Thank you for your interest in **onsemi** products.

Your technical document begins on the following pages.

Your Feedback is Important to Us!

Please take a moment to participate in our short survey.
At **onsemi**, we are dedicated to delivering technical content that best meets your needs.

Help Us Improve – Take the Survey

This survey is intended to collect your feedback, capture any issues you may encounter, and to provide improvements you would like to suggest.

We look forward to your feedback.

To learn more about **onsemi**, please visit our website at
www.onsemi.com

onsemi and onsemi and other names, marks, and brands are registered and/or common law trademarks of Semiconductor Components Industries, LLC dba "**onsemi**" or its affiliates and/or subsidiaries in the United States and/or other countries. **onsemi** owns the rights to a number of patents, trademarks, copyrights, trade secrets, and other intellectual property. A listing of **onsemi** product/patent coverage may be accessed at www.onsemi.com/site/pdf/Patent-Marking.pdf. **onsemi** reserves the right to make changes at any time to any products or information herein, without notice. The information herein is provided "as-is" and **onsemi** makes no warranty, representation or guarantee regarding the accuracy of the information, product features, availability, functionality, or suitability of its products for any particular purpose, nor does **onsemi** assume any liability arising out of the application or use of any product or circuit, and specifically disclaims any and all liability, including without limitation special, consequential or incidental damages. Buyer is responsible for its products and applications using **onsemi** products, including compliance with all laws, regulations and safety requirements or standards, regardless of any support or applications information provided by **onsemi**. "Typical" parameters which may be provided in **onsemi** data sheets and/or specifications can and do vary in different applications and actual performance may vary over time. All operating parameters, including "Typicals" must be validated for each customer application by customer's technical experts. **onsemi** does not convey any license under any of its intellectual property rights nor the rights of others. **onsemi** products are not designed, intended, or authorized for use as a critical component in life support systems or any FDA Class 3 medical devices or medical devices with a same or similar classification in a foreign jurisdiction or any devices intended for implantation in the human body. Should Buyer purchase or use **onsemi** products for any such unintended or unauthorized application, Buyer shall indemnify and hold **onsemi** and its officers, employees, subsidiaries, affiliates, and distributors harmless against all claims, costs, damages, and expenses, and reasonable attorney fees arising out of, directly or indirectly, any claim of personal injury or death associated with such unintended or unauthorized use, even if such claim alleges that **onsemi** was negligent regarding the design or manufacture of the part. **onsemi** is an Equal Opportunity/Affirmative Action Employer. This literature is subject to all applicable copyright laws and is not for resale in any manner. Other names and brands may be claimed as the property of others.

EEPROM Serial 512-Kb I²C - Automotive Grade 1 in Wettable Flank UDFN Package

NV24C512MUW

UDFN−8
(WETTABLE FLANK)
MUW3 SUFFIX
CASE 517DH

MARKING DIAGRAM

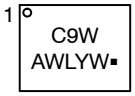

C9W= Specific Device Code
A = Assembly Site
WL = Wafer Lot Number
YW = Assembly Start Week
▪ = Pb−Free Package

PIN CONFIGURATION

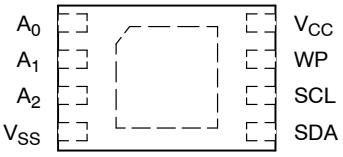

UDFN−8

PIN FUNCTION

Pin Name	Function
A_0, A_1, A_2	Device Address
SDA	Serial Data
SCL	Serial Clock
WP	Write Protect
V_{CC}	Power Supply
V_{SS}	Ground

ORDERING INFORMATION

See detailed ordering and shipping information on page 9 of this data sheet.

Description

The NV24C512MUW is a EEPROM Serial 512−Kb I²C, internally organized as 65,536 words of 8 bits each.

It features a 128−byte page write buffer and supports the Standard (100 kHz), Fast (400 kHz) and Fast−Plus (1 MHz) I²C protocol.

Write operations can be inhibited by taking the WP pin High (this protects the entire memory).

External address pins make it possible to address up to eight NV24C512MUW devices on the same bus.

On−Chip ECC (Error Correction Code) makes the device suitable for high reliability applications.

Features

- Automotive AEC−Q100 Grade 1 (−40°C to +125°C) Qualified
- Supports Standard, Fast and Fast−Plus I²C Protocol
- 2.5 V to 5.5 V Supply Voltage Range
- 128−Byte Page Write Buffer
- Hardware Write Protection for Entire Memory
- Schmitt Triggers and Noise Suppression Filters on I²C Bus Inputs (SCL and SDA)
- Low Power CMOS Technology
- 1,000,000 Program/Erase Cycles
- 100 Year Data Retention
- 8−lead SOIC, TSSOP, UDFN and 8−ball WLCSP Packages
- These Devices are Pb−Free, Halogen Free/BFR Free and are RoHS Compliant

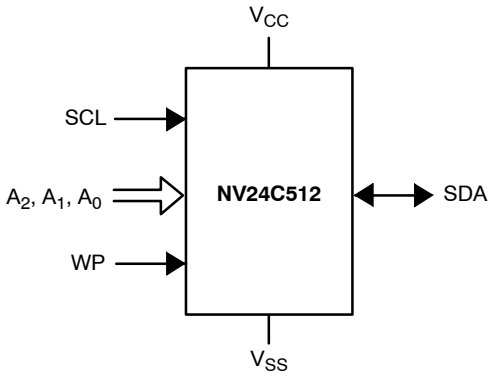

Figure 1. Functional Symbol

© Semiconductor Components Industries, LLC, 2017

Table 1. ABSOLUTE MAXIMUM RATINGS

Parameters	Ratings	Units
Storage Temperature	–65 to +150	°C
Voltage on any Pin with Respect to Ground (Note 1)	–0.5 to +6.5	V

Stresses exceeding those listed in the Maximum Ratings table may damage the device. If any of these limits are exceeded, device functionality should not be assumed, damage may occur and reliability may be affected.

1. The DC input voltage on any pin should not be lower than –0.5 V or higher than V_{CC} + 0.5 V. During transitions, the voltage on any pin may undershoot to no less than –1.5 V or overshoot to no more than V_{CC} + 1.5 V, for periods of less than 20 ns.

Table 2. RELIABILITY CHARACTERISTICS (Note 2)

Symbol	Parameter	Min	Units
N_{END} (Notes 3, 4)	Endurance	1,000,000	Program/Erase Cycles
T_{DR}	Data Retention	100	Years

2. These parameters are tested initially and after a design or process change that affects the parameter according to appropriate AEC–Q100 and JEDEC test methods.
3. Page Mode, V_{CC} = 5 V, 25°C.
4. The device uses ECC (Error Correction Code) logic with 6 ECC bits to correct one bit error in 4 data bytes. Therefore, when a single byte has to be written, 4 bytes (including the ECC bits) are re-programmed. It is recommended to write by multiple of 4 bytes in order to benefit from the maximum number of write cycles.

Table 3. D.C. OPERATING CHARACTERISTICS V_{CC} = 2.5 V to 5.5 V, T_A = –40°C to +125°C, unless otherwise specified.

Symbol	Parameter	Test Conditions		Min	Max	Units
I_{CCR}	Read Current	Read, f_{SCL} = 400 kHz/1 MHz			1	mA
I_{CCW}	Write Current	V_{CC} = 5.5 V			2.5	mA
I_{SB}	Standby Current	All I/O Pins at GND or V_{CC}	T_A = –40°C to +125°C		5	μA
I_L	I/O Pin Leakage	Pin at GND or V_{CC}	T_A = –40°C to +125°C		2	μA
V_{IL1}	Input Low Voltage			–0.5	0.3 V_{CC}	V
V_{IH1}	Input High Voltage			0.7 V_{CC}	V_{CC} + 0.5	V
V_{OL1}	Output Low Voltage	I_{OL} = 3.0 mA			0.4	V

Product parametric performance is indicated in the Electrical Characteristics for the listed test conditions, unless otherwise noted. Product performance may not be indicated by the Electrical Characteristics if operated under different conditions.

Table 4. PIN IMPEDANCE CHARACTERISTICS V_{CC} = 2.5 V to 5.5 V, T_A = –40°C to +125°C, unless otherwise specified.

Symbol	Parameter	Conditions	Max	Units
C_{IN} (Note 5)	SDA I/O Pin Capacitance	V_{IN} = 0 V	8	pF
C_{IN} (Note 5)	Input Capacitance (other pins)	V_{IN} = 0 V	6	pF
I_{WP}, I_A (Note 6)	WP Input Current, Address Input Current (A_0, A_1, A_2)	$V_{IN} < V_{IH}$, V_{CC} = 5.5 V	75	μA
		$V_{IN} < V_{IH}$, V_{CC} = 3.3 V	50	
		$V_{IN} > V_{IH}$	2	

5. These parameters are tested initially and after a design or process change that affects the parameter according to appropriate AEC–Q100 and JEDEC test methods.
6. When not driven, the WP, A_0, A_1, A_2 pins are pulled down to GND internally. For improved noise immunity, the internal pull–down is relatively strong; therefore the external driver must be able to supply the pull–down current when attempting to drive the input HIGH. To conserve power, as the input level exceeds the trip point of the CMOS input buffer (~ 0.5 x V_{CC}), the strong pull–down reverts to a weak current source.

Table 5. A.C. CHARACTERISTICS (Note 7) V_{CC} = 2.5 V to 5.5 V, T_A = −40°C to +125°C, unless otherwise specified.

Symbol	Parameter	Standard		Fast		Fast−Plus		Units
		Min	Max	Min	Max	Min	Max	
F_{SCL}	Clock Frequency		100		400		1,000	kHz
$t_{HD:STA}$	START Condition Hold Time	4		0.6		0.25		μs
t_{LOW}	Low Period of SCL Clock	4.7		1.3		0.45		μs
t_{HIGH}	High Period of SCL Clock	4		0.6		0.40		μs
$t_{SU:STA}$	START Condition Setup Time	4.7		0.6		0.25		μs
$t_{HD:DAT}$	Data In Hold Time	0		0		0		μs
$t_{SU:DAT}$	Data In Setup Time	250		100		50		ns
t_R (Note 8)	SDA and SCL Rise Time		1,000		300		100	ns
t_F (Note 8)	SDA and SCL Fall Time		300		300		100	ns
$t_{SU:STO}$	STOP Condition Setup Time	4		0.6		0.25		μs
t_{BUF}	Bus Free Time Between STOP and START	4.7		1.3		0.5		μs
t_{AA}	SCL Low to Data Out Valid		3.5		0.9		0.40	μs
t_{DH}	Data Out Hold Time	50		50		50		ns
T_i (Note 8)	Noise Pulse Filtered at SCL and SDA Inputs		50		50		50	ns
$t_{SU:WP}$	WP Setup Time	0		0		0		μs
$t_{HD:WP}$	WP Hold Time	2.5		2.5		1		μs
t_{WR}	Write Cycle Time		5		5		5	ms
t_{PU} (Notes 8, 9)	Power-up to Ready Mode		1		1	0.1	1	ms

7. Test conditions according to “A.C. Test Conditions” table.
8. Tested initially and after a design or process change that affects this parameter.
9. t_{PU} is the delay between the time V_{CC} is stable and the device is ready to accept commands.

Table 6. A.C. TEST CONDITIONS

Input Levels	0.2 x V_{CC} to 0.8 x V_{CC}
Input Rise and Fall Times	≤ 50 ns
Input Reference Levels	0.3 x V_{CC}, 0.7 x V_{CC}
Output Reference Levels	0.5 x V_{CC}
Output Load	Current Source: I_L = 3 mA, C_L = 100 pF

POWER-ON RESET (POR)

The NV24C512MUW incorporates Power−On Reset (POR) circuitry which protects the internal logic against powering up in the wrong state.

The device will power up into Standby mode after V_{CC} exceeds the POR trigger level and will power down into Reset mode when V_{CC} drops below the POR trigger level.

This bi−directional POR behavior protects the device against brown−out failure, following a temporary loss of power.

PIN DESCRIPTION

SCL: The Serial Clock input pin accepts the Serial Clock signal generated by the Master.

SDA: The Serial Data I/O pin receives input data and transmits data stored in EEPROM. In transmit mode, this pin is open drain. Data is acquired on the positive edge, and is delivered on the negative edge of SCL.

A_0, A_1 and A_2: The Address pins accept the device address. These pins have on−chip pull−down resistors.

WP: The Write Protect input pin inhibits all write operations, when pulled HIGH. This pin has an on−chip pull−down resistor.

FUNCTIONAL DESCRIPTION

The NV24C512MUW supports the Inter−Integrated Circuit (I^2C) Bus data transmission protocol, which defines a device that sends data to the bus as a transmitter and a device receiving data as a receiver. Data flow is controlled by a Master device, which generates the serial clock and all START and STOP conditions. The NV24C512MUW acts as a Slave device. Master and Slave alternate as either transmitter or receiver. Up to 8 devices may be connected to the bus as determined by the device address inputs A_0, A_1, and A_2.

I^2C Bus Protocol

The I^2C bus consists of two ‘wires’, SCL and SDA. The two wires are connected to the V_{CC} supply via pull−up resistors. Master and Slave devices connect to the 2−wire bus via their respective SCL and SDA pins. The transmitting device pulls down the SDA line to ‘transmit’ a ‘0’ and releases it to ‘transmit’ a ‘1’.

Data transfer may be initiated only when the bus is not busy (see A.C. Characteristics).

During data transfer, the SDA line must remain stable while the SCL line is HIGH. An SDA transition while SCL is HIGH will be interpreted as a START or STOP condition (Figure 2).

START

The START condition precedes all commands. It consists of a HIGH to LOW transition on SDA while SCL is HIGH. The START acts as a ‘wake−up’ call to all receivers. Absent a START, a Slave will not respond to commands.

STOP

The STOP condition completes all commands. It consists of a LOW to HIGH transition on SDA while SCL is HIGH. The STOP starts the internal Write cycle (when following a Write command) or sends the Slave into standby mode (when following a Read command).

Device Addressing

The Master initiates data transfer by creating a START condition on the bus. The Master then broadcasts an 8−bit serial Slave address. The first 4 bits of the Slave address are set to 1010, for normal Read/Write operations (Figure 3). The next 3 bits, A_2, A_1 and A_0, select one of 8 possible Slave devices. The last bit, R/W, specifies whether a Read (1) or Write (0) operation is to be performed.

Acknowledge

After processing the Slave address, the Slave responds with an acknowledge (ACK) by pulling down the SDA line during the 9th clock cycle (Figure 4). The Slave will also acknowledge the byte address and every data byte presented in Write mode. In Read mode the Slave shifts out a data byte, and then releases the SDA line during the 9th clock cycle. If the Master acknowledges the data, then the Slave continues transmitting. The Master terminates the session by not acknowledging the last data byte (NoACK) and by sending a STOP to the Slave. Bus timing is illustrated in Figure 5.

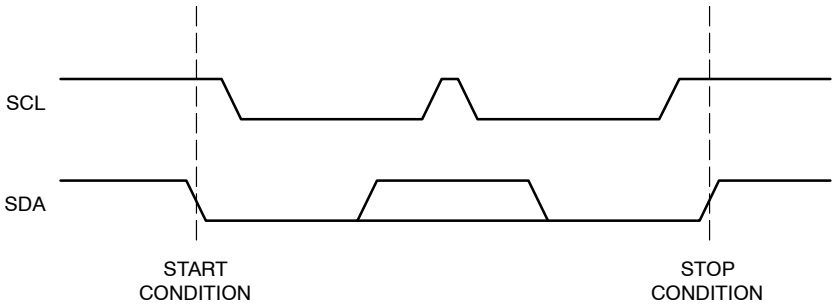

Figure 2. Start/Stop Timing

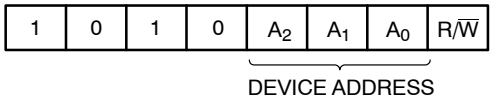

Figure 3. Slave Address Bits

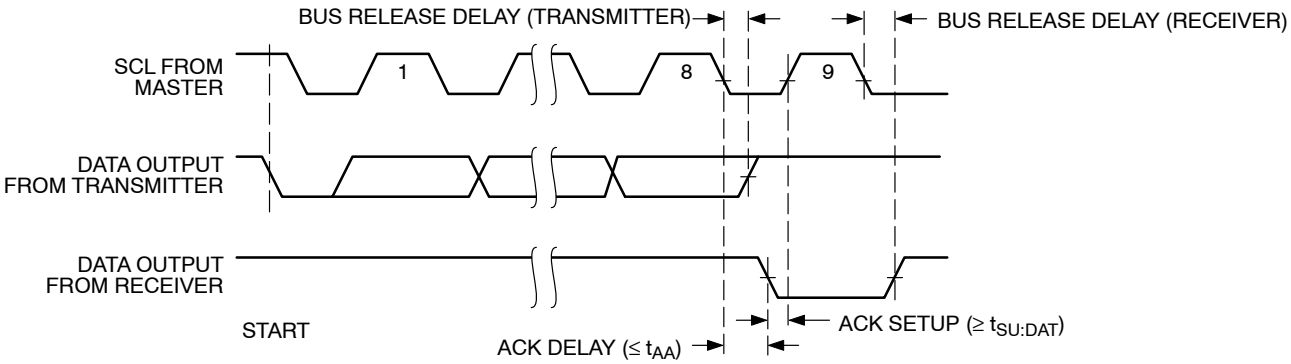

Figure 4. Acknowledge Timing

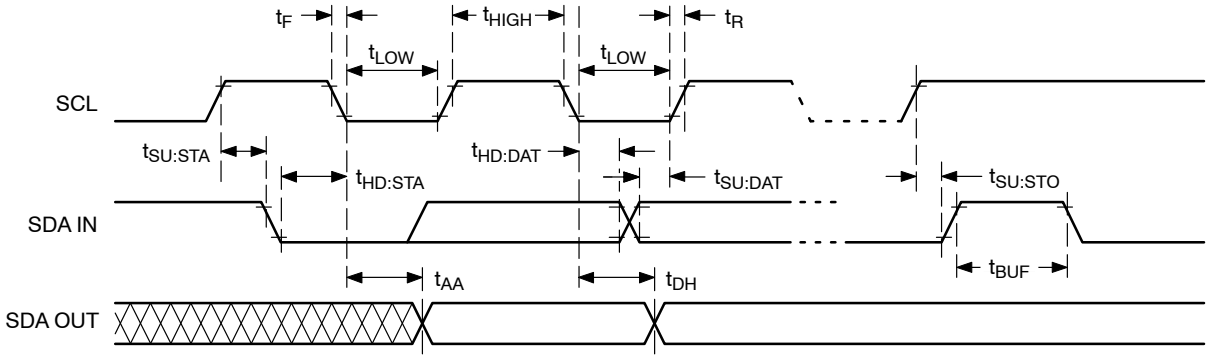

Figure 5. Bus Timing

WRITE OPERATIONS

Byte Write

In Byte Write mode the Master sends a START, followed by Slave address, two byte address and data to be written (Figure 6). The Slave acknowledges all 4 bytes, and the Master then follows up with a STOP, which in turn starts the internal Write operation (Figure 7). During internal Write, the Slave will not acknowledge any Read or Write request from the Master.

Page Write

The NV24C512MUW contains 65,536 bytes of data, arranged in 512 pages of 128 bytes each. A two byte address word, following the Slave address, points to the first byte to be written. The most significant 9 bits (A_{15} to A_7) identify the page and the last 7 bits identify the byte within the page. Up to 128 bytes can be written in one Write cycle (Figure 8).

The internal byte address counter is automatically incremented after each data byte is loaded. If the Master transmits more than 128 data bytes, then earlier bytes will be overwritten by later bytes in a 'wrap−around' fashion (within the selected page). The internal Write cycle starts immediately following the STOP.

Acknowledge Polling

Acknowledge polling can be used to determine if the NV24C512MUW is busy writing or is ready to accept commands. Polling is implemented by interrogating the device with a 'Selective Read' command (see READ OPERATIONS).

The NV24C512MUW will not acknowledge the Slave address, as long as internal Write is in progress.

Hardware Write Protection

With the WP pin held HIGH, the entire memory is protected against Write operations. If the WP pin is left floating or is grounded, it has no impact on the operation of the NV24C512MUW. The state of the WP pin is strobed on the last falling edge of SCL immediately preceding the first data byte (Figure 9). If the WP pin is HIGH during the strobe interval, the NV24C512MUW will not acknowledge the data byte and the Write request will be rejected.

Delivery State

The NV24C512MUW is shipped erased, i.e., all bytes are FFh.

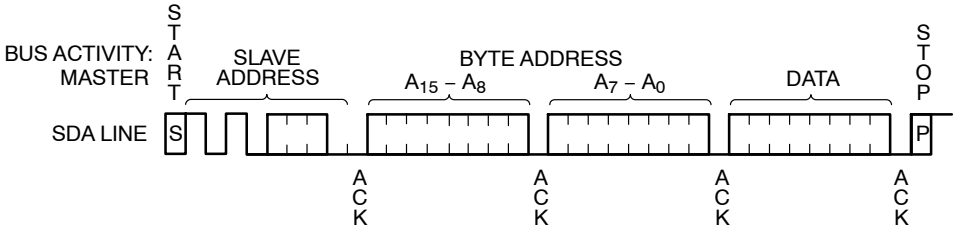

Figure 6. Byte Write Timing

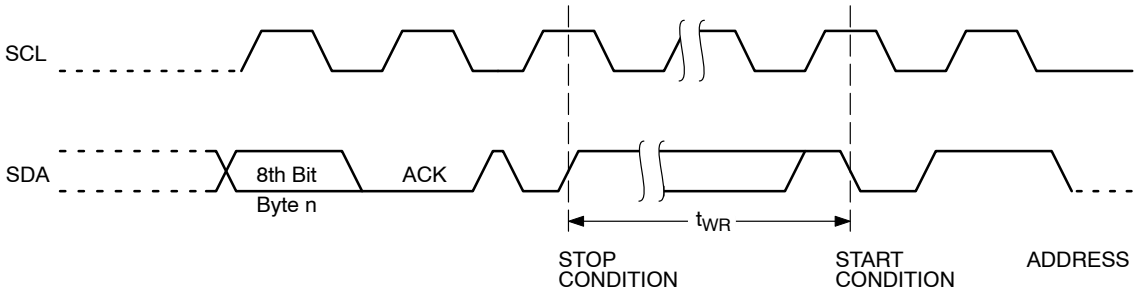

Figure 7. Write Cycle Timing

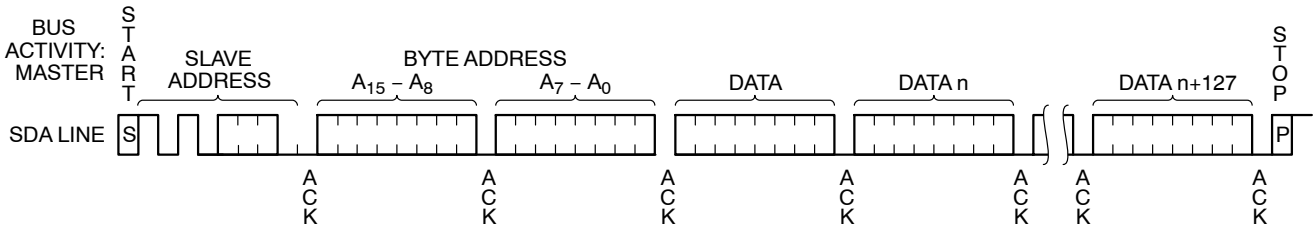

Figure 8. Page Write Timing

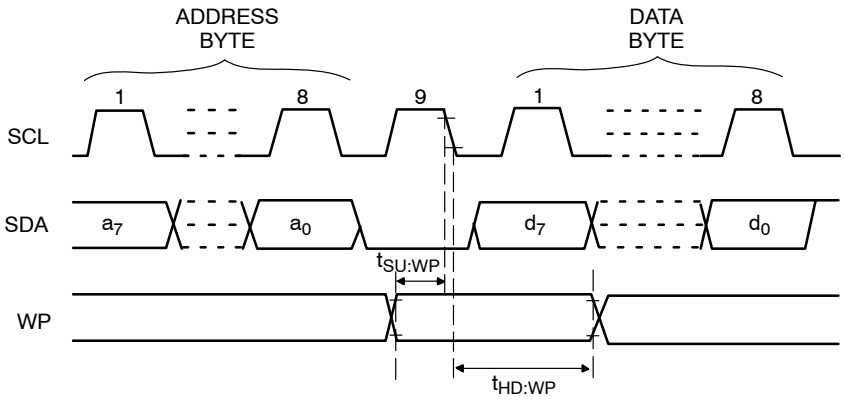

Figure 9. WP Timing

READ OPERATIONS

Immediate Address Read

In standby mode, the NV24C512MUW internal address counter points to the data byte immediately following the last byte accessed by a previous operation. If that ‘previous’ byte was the last byte in memory, then the address counter will point to the 1st memory byte, etc.

When, following a START, the NV24C512MUW is presented with a Slave address containing a ‘1’ in the R/W bit position (Figure 10), it will acknowledge (ACK) in the 9th clock cycle, and will then transmit data being pointed at by the internal address counter. The Master can stop further transmission by issuing a NoACK, followed by a STOP condition.

Selective Read

The Read operation can also be started at an address different from the one stored in the internal address counter. The address counter can be initialized by performing a ‘dummy’ Write operation (Figure 11). Here the START is followed by the Slave address (with the R/W bit set to ‘0’) and the desired two byte address. Instead of following up with data, the Master then issues a 2nd START, followed by the ‘Immediate Address Read’ sequence, as described earlier.

Sequential Read

If the Master acknowledges the 1st data byte transmitted by the NV24C512MUW, then the device will continue transmitting as long as each data byte is acknowledged by the Master (Figure 12). If the end of memory is reached during sequential Read, then the address counter will ‘wrap−around’ to the beginning of memory, etc. Sequential Read works with either ‘Immediate Address Read’ or ‘Selective Read’, the only difference being the starting byte address.

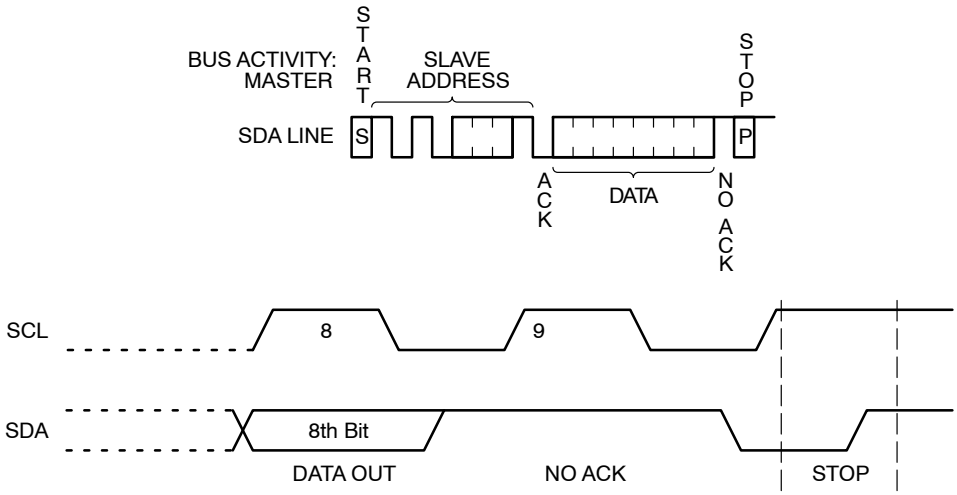

Figure 10. Immediate Address Read Timing

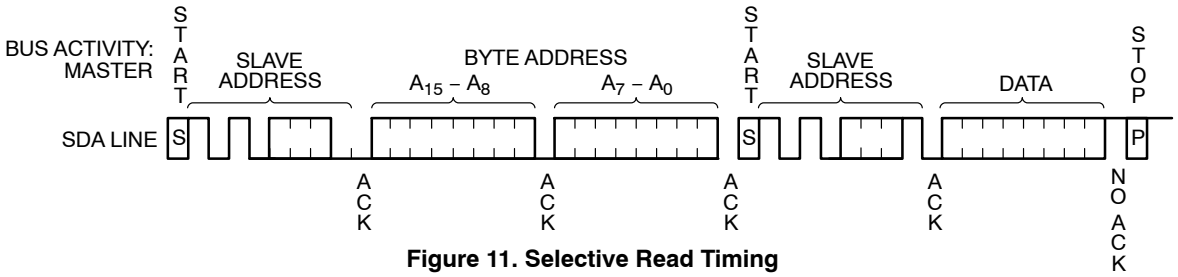

Figure 11. Selective Read Timing

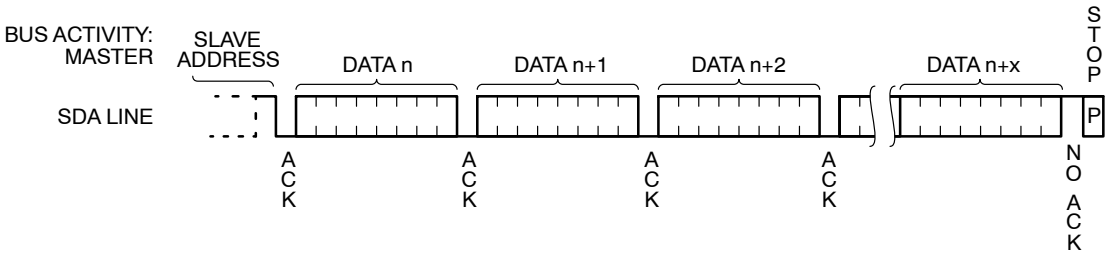

Figure 12. Sequential Read Timing

ORDERING INFORMATION (NOTES 10, 11, 12, 14)

Device Order Number	Specific Device Marking	Temperature Range	Lead Finish	Package Type	Shipping†
NV24C512MUW3VTBG	C9W	−40°C to +125°C	NiPdAu	UDFN−8 (Wettable Flank)	3000 / Tape & Reel

†For information on tape and reel specifications, including part orientation and tape sizes, please refer to our Tape and Reel Packaging Specifications Brochure, BRD8011/D.

10. All packages are RoHS-compliant (Pb−Free, Halogen-free).
11. The standard lead finish is NiPdAu.
12. For detailed information and a breakdown of device nomenclature and numbering systems, please see the **onsemi** Device Nomenclature document, TND310/D, available at www.onsemi.com
13. Preliminary. Please contact factory for availability.
14. For additional package and temperature options, please contact your nearest **onsemi** Sales office.

onsemi is licensed by the Philips Corporation to carry the I^2C bus protocol.

UDFN8 2x3, 0.5P
CASE 517DH
ISSUE A

SCALE 2:1

DATE 10 DEC 2020

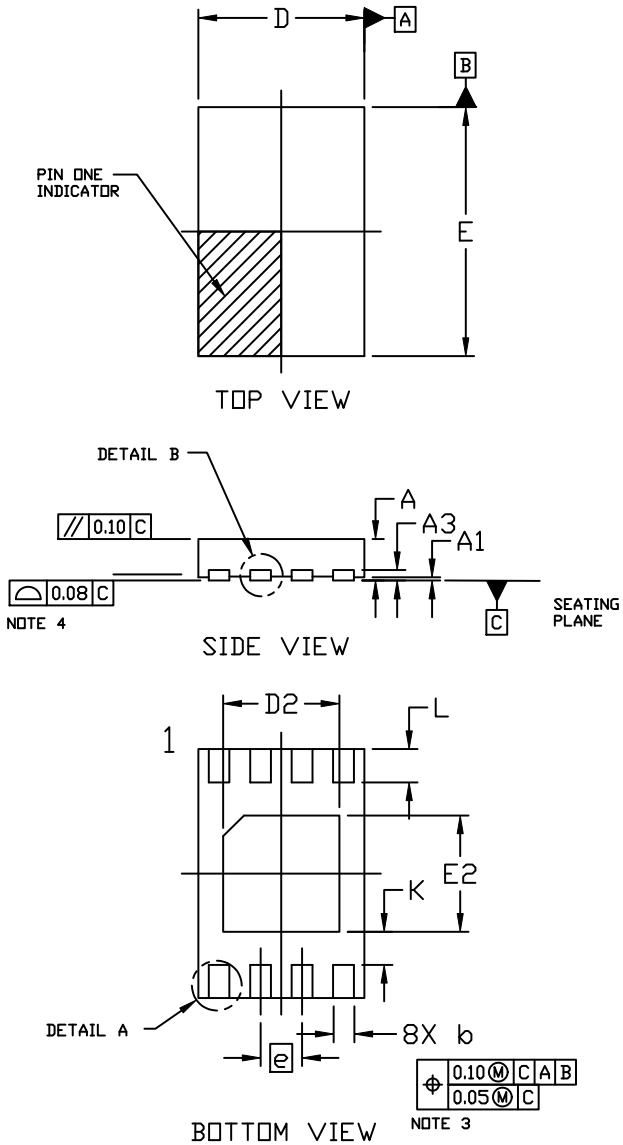

NOTES:
1. DIMENSIONING AND TOLERANCING PER ASME Y14.5M,1994.
2. CONTROLLING DIMENSION: MILLIMETERS
3. DIMENSION b APPLIES TO PLATED TERMINAL AND IS MEASURED BETWEEN 0.15 AND 0.25MM FROM THE TERMINAL TIP.
4. COPLANARITY APPLIES TO THE EXPOSED PAD AS WELL AS THE TERMINALS.

DIM	MILLIMETERS		
	MIN.	NOM.	MAX.
A	0.45	0.50	0.55
A1	0.00	---	0.05
A3	0.13 REF		
b	0.20	0.25	0.30
D	1.90	2.00	2.10
D2	1.30	1.40	1.50
E	2.90	3.00	3.10
E2	1.30	1.40	1.50
e	0.50 BSC		
K	0.40 REF		
L	0.30	0.40	0.50

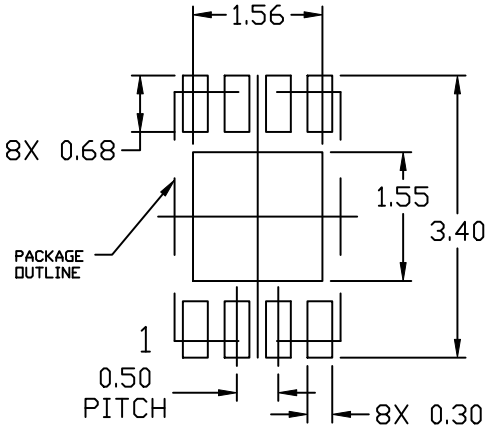

RECOMMENDED MOUNTING FOOTPRINT*

* For additional information on our Pb-Free strategy and soldering details, please download the ON Semiconductor Soldering and Mounting Techniques Reference Manual, SOLDERRM/D.

GENERIC MARKING DIAGRAM*

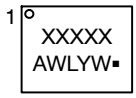

XXXXX	= Specific Device Code
A	= Assembly Location
WL	= Wafer Lot
Y	= Year
W	= Work Week
▪	= Pb−Free Package

*This information is generic. Please refer to device data sheet for actual part marking. Pb−Free indicator, “G” or microdot “▪”, may or may not be present. Some products may not follow the Generic Marking.

DOCUMENT NUMBER:	**98AON06579G**	Electronic versions are uncontrolled except when accessed directly from the Document Repository. Printed versions are uncontrolled except when stamped “CONTROLLED COPY” in red.
DESCRIPTION:	**UDFN8 2X3, 0.5P**	**PAGE 1 OF 1**

onsemi and onsemi are trademarks of Semiconductor Components Industries, LLC dba **onsemi** or its subsidiaries in the United States and/or other countries. **onsemi** reserves the right to make changes without further notice to any products herein. **onsemi** makes no warranty, representation or guarantee regarding the suitability of its products for any particular purpose, nor does **onsemi** assume any liability arising out of the application or use of any product or circuit, and specifically disclaims any and all liability, including without limitation special, consequential or incidental damages. **onsemi** does not convey any license under its patent rights nor the rights of others.

onsemi, onsemi, and other names, marks, and brands are registered and/or common law trademarks of Semiconductor Components Industries, LLC dba "**onsemi**" or its affiliates and/or subsidiaries in the United States and/or other countries. **onsemi** owns the rights to a number of patents, trademarks, copyrights, trade secrets, and other intellectual property. A listing of **onsemi**'s product/patent coverage may be accessed at www.onsemi.com/site/pdf/Patent−Marking.pdf. **onsemi** reserves the right to make changes at any time to any products or information herein, without notice. The information herein is provided "as−is" and **onsemi** makes no warranty, representation or guarantee regarding the accuracy of the information, product features, availability, functionality, or suitability of its products for any particular purpose, nor does **onsemi** assume any liability arising out of the application or use of any product or circuit, and specifically disclaims any and all liability, including without limitation special, consequential or incidental damages. Buyer is responsible for its products and applications using **onsemi** products, including compliance with all laws, regulations and safety requirements or standards, regardless of any support or applications information provided by **onsemi**. "Typical" parameters which may be provided in **onsemi** data sheets and/or specifications can and do vary in different applications and actual performance may vary over time. All operating parameters, including "Typicals" must be validated for each customer application by customer's technical experts. **onsemi** does not convey any license under any of its intellectual property rights nor the rights of others. **onsemi** products are not designed, intended, or authorized for use as a critical component in life support systems or any FDA Class 3 medical devices or medical devices with a same or similar classification in a foreign jurisdiction or any devices intended for implantation in the human body. Should Buyer purchase or use **onsemi** products for any such unintended or unauthorized application, Buyer shall indemnify and hold **onsemi** and its officers, employees, subsidiaries, affiliates, and distributors harmless against all claims, costs, damages, and expenses, and reasonable attorney fees arising out of, directly or indirectly, any claim of personal injury or death associated with such unintended or unauthorized use, even if such claim alleges that **onsemi** was negligent regarding the design or manufacture of the part. **onsemi** is an Equal Opportunity/Affirmative Action Employer. This literature is subject to all applicable copyright laws and is not for resale in any manner.

ADDITIONAL INFORMATION

TECHNICAL PUBLICATIONS:
Technical Library: www.onsemi.com/design/resources/technical−documentation
onsemi Website: www.onsemi.com

ONLINE SUPPORT: www.onsemi.com/support
For additional information, please contact your local Sales Representative at
www.onsemi.com/support/sales