NL17SHT32

2-Input OR Gate / CMOS Logic Level Shifter

The NL17SHT32 is an advanced high speed CMOS 2−input OR gate fabricated with silicon gate CMOS technology. It achieves high speed operation similar to equivalent Bipolar Schottky TTL while maintaining CMOS low power dissipation.

The internal circuit is composed of three stages, including a buffer output which provides high noise immunity and stable output.

The device input is compatible with TTL−type input thresholds and the output has a full 5 V CMOS level output swing. The input protection circuitry on this device allows overvoltage tolerance on the input, allowing the device to be used as a logic−level translator from 3 V CMOS logic to 5 V CMOS Logic or from 1.8 V CMOS logic to 3 V CMOS Logic while operating at the high−voltage power supply.

The NL17SHT32 input structure provides protection when voltages up to 7 V are applied, regardless of the supply voltage. This allows the NL17SHT32 to be used to interface 5 V circuits to 3 V circuits. The output structures also provide protection when V_{CC} = 0 V. These input and output structures help prevent device destruction caused by supply voltage − input/output voltage mismatch, battery backup, hot insertion, etc.

Features

- High Speed: t_{PD} = 3.5 ns (Typ) at V_{CC} = 5 V
- Low Power Dissipation: I_{CC} = 2 μA (Max) at T_A = 25°C
- TTL−Compatible Inputs: V_{IL} = 0.8 V; V_{IH} = 2 V
- CMOS−Compatible Outputs: V_{OH} > 0.8 V_{CC}; V_{OL} < 0.1 V_{CC} @Load
- Power Down Protection Provided on Inputs and Outputs
- Balanced Propagation Delays
- Pin and Function Compatible with Other Standard Logic Families
- These are Pb−Free Devices

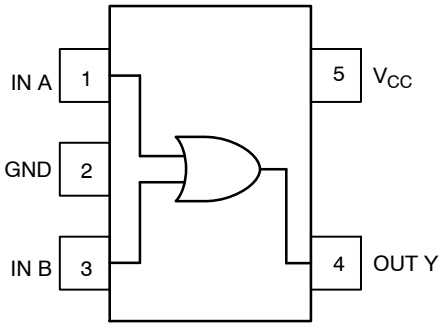

Figure 1. Pinout (Top View)

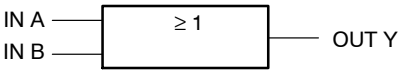

Figure 2. Logic Symbol

ON Semiconductor®

http://onsemi.com

MARKING DIAGRAM

SOT−953
CASE 527AE

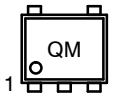

Q = Specific Device Code
M = Month Code

PIN ASSIGNMENT	
1	IN A
2	GND
3	IN B
4	OUT Y
5	V_{CC}

FUNCTION TABLE

Inputs		Output
A	B	Y
L	L	L
L	H	H
H	L	H
H	H	H

ORDERING INFORMATION

See detailed ordering and shipping information in the package dimensions section on page 4 of this data sheet.

© Semiconductor Components Industries, LLC, 2011

MAXIMUM RATINGS

Symbol	Characteristics	Value	Unit
V_{CC}	DC Supply Voltage	−0.5 to +7.0	V
V_{IN}	DC Input Voltage	−0.5 to +7.0	V
V_{OUT}	DC Output Voltage V_{CC} = 0 High or Low State	−0.5 to 7.0 −0.5 to V_{CC} + 0.5	V
I_{IK}	Input Diode Current	−20	mA
I_{OK}	Output Diode Current V_{OUT} < GND; V_{OUT} > V_{CC}	±20	mA
I_{OUT}	DC Output Current	±25	mA
I_{CC}	DC Supply Current, V_{CC} and GND	50	mA
P_D	Power dissipation in still air	50	mW
T_L	Lead temperature, 1 mm from case for 10 s	260	°C
T_J	Junction temperature under bias	+150	°C
T_{stg}	Storage temperature	−65 to +150	°C
$I_{Latchup}$	Latchup Performance Above V_{CC} and Below GND at 125°C (Note 1)	±100	mA

Stresses exceeding Maximum Ratings may damage the device. Maximum Ratings are stress ratings only. Functional operation above the Recommended Operating Conditions is not implied. Extended exposure to stresses above the Recommended Operating Conditions may affect device reliability.

1. Tested to EIA/JESD78

RECOMMENDED OPERATING CONDITIONS

Symbol	Characteristics	Min	Max	Unit
V_{CC}	DC Supply Voltage	3.0	5.5	V
V_{IN}	DC Input Voltage	0.0	5.5	V
V_{OUT}	DC Output Voltage V_{CC} = 0 High or Low State	0.0 0.0	5.5 V_{CC}	V
T_A	Operating Temperature Range	−55	+125	°C
t_r , t_f	Input Rise and Fall Time V_{CC} = 3.3 V ± 0.3 V V_{CC} = 5.0 V ± 0.5 V	0 0	100 20	ns/V

Device Junction Temperature versus Time to 0.1% Bond Failures

Junction Temperature °C	Time, Hours	Time, Years
80	1,032,200	117.8
90	419,300	47.9
100	178,700	20.4
110	79,600	9.4
120	37,000	4.2
130	17,800	2.0
140	8,900	1.0

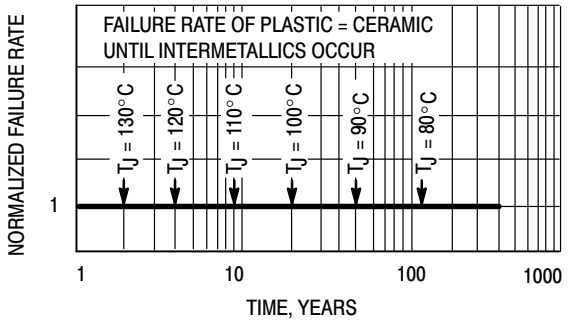

Figure 3. Failure Rate vs. Time Junction Temperature

DC ELECTRICAL CHARACTERISTICS

Symbol	Parameter	Test Conditions	V_{CC} (V)	T_A = 25°C Min	T_A = 25°C Typ	T_A = 25°C Max	$T_A \le 85°C$ Min	$T_A \le 85°C$ Max	$-55 \le T_A \le 125°C$ Min	$-55 \le T_A \le 125°C$ Max	Unit
V_{IH}	Minimum High−Level Input Voltage		3.0 4.5 5.5	1.4 2.0 2.0			1.4 2.0 2.0		1.4 2.0 2.0		V
V_{IL}	Maximum Low−Level Input Voltage		3.0 4.5 5.5			0.53 0.8 0.8		0.53 0.8 0.8		0.53 0.8 0.8	V
V_{OH}	Minimum High−Level Output Voltage $V_{IN} = V_{IH}$ or V_{IL}	$V_{IN} = V_{IH}$ or V_{IL} $I_{OH} = -50\ \mu A$	3.0 4.5	2.9 4.4	3.0 4.5		2.9 4.4		2.9 4.4		V
		$V_{IN} = V_{IH}$ or V_{IL} $I_{OH} = -4$ mA $I_{OH} = -8$ mA	3.0 4.5	2.58 3.94			2.48 3.80		2.34 3.66		V
V_{OL}	Maximum Low−Level Output Voltage $V_{IN} = V_{IH}$ or V_{IL}	$V_{IN} = V_{IH}$ or V_{IL} $I_{OL} = 50\ \mu A$	3.0 4.5		0.0 0.0	0.1 0.1		0.1 0.1		0.1 0.1	V
		$V_{IN} = V_{IH}$ or V_{IL} $I_{OL} = 4$ mA $I_{OL} = 8$ mA	3.0 4.5			0.36 0.36		0.44 0.44		0.52 0.52	V
I_{IN}	Maximum Input Leakage Current	V_{IN} = 5.5 V or GND	0 to 5.5			±0.1		±1.0		±1.0	μA
I_{CC}	Maximum Quiescent Supply Current	$V_{IN} = V_{CC}$ or GND	5.5			2.0		20		40	μA
I_{CCT}	Quiescent Supply Current	Input: V_{IN} = 3.4 V	5.5			1.35		1.50		1.65	mA
I_{OPD}	Output Leakage Current	V_{OUT} = 5.5 V	0.0			0.5		5.0		10	μA

AC ELECTRICAL CHARACTERISTICS (C_{load} = 50 pF, Input $t_r = t_f$ = 3.0ns)

Symbol	Parameter	Test Conditions		T_A = 25°C Min	T_A = 25°C Typ	T_A = 25°C Max	$T_A \le 85°C$ Min	$T_A \le 85°C$ Max	$-55 \le T_A \le 125°C$ Min	$-55 \le T_A \le 125°C$ Max	Unit
t_{PLH}, t_{PHL}	Maximum Propagation Delay, Input A or B to Y	$V_{CC} = 3.3 \pm 0.3$ V	C_L = 15 pF C_L = 50 pF		4.8 6.1	7.9 11.4		9.5 13.0		11.5 15.5	ns
		$V_{CC} = 5.0 \pm 0.5$ V	C_L = 15 pF C_L = 50 pF		3.7 4.4	5.5 7.5		6.5 8.5		8.0 10.0	
C_{IN}	Maximum Input Capacitance				5.5	10		10		10	pF

		Typical @ 25°C, V_{CC} = 5.0 V	
C_{PD}	Power Dissipation Capacitance (Note 2)	11	pF

2. C_{PD} is defined as the value of the internal equivalent capacitance which is calculated from the operating current consumption without load. Average operating current can be obtained by the equation: $I_{CC(OPR)} = C_{PD} \bullet V_{CC} \bullet f_{in} + I_{CC}$. C_{PD} is used to determine the no−load dynamic power consumption; $P_D = C_{PD} \bullet V_{CC}^2 \bullet f_{in} + I_{CC} \bullet V_{CC}$.

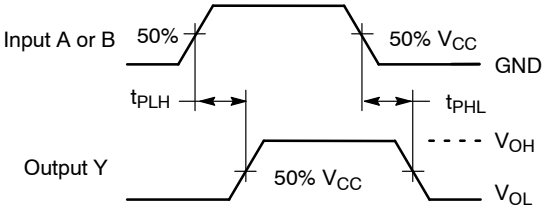

Figure 4. Switching Waveforms

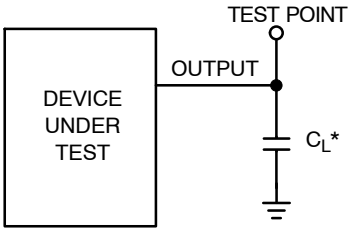

*Includes all probe and jig capacitance

Figure 5. Test Circuit

ORDERING INFORMATION

Device	Package	Shipping†
NL17SHT32P5T5G	SOT−953 (Pb−Free)	8000 / Tape & Reel

†For information on tape and reel specifications, including part orientation and tape sizes, please refer to our Tape and Reel Packaging Specifications Brochure, BRD8011/D.

onsemi, onsemi, and other names, marks, and brands are registered and/or common law trademarks of Semiconductor Components Industries, LLC dba "**onsemi**" or its affiliates and/or subsidiaries in the United States and/or other countries. **onsemi** owns the rights to a number of patents, trademarks, copyrights, trade secrets, and other intellectual property. A listing of **onsemi**'s product/patent coverage may be accessed at www.onsemi.com/site/pdf/Patent−Marking.pdf. **onsemi** reserves the right to make changes at any time to any products or information herein, without notice. The information herein is provided "as−is" and **onsemi** makes no warranty, representation or guarantee regarding the accuracy of the information, product features, availability, functionality, or suitability of its products for any particular purpose, nor does **onsemi** assume any liability arising out of the application or use of any product or circuit, and specifically disclaims any and all liability, including without limitation special, consequential or incidental damages. Buyer is responsible for its products and applications using **onsemi** products, including compliance with all laws, regulations and safety requirements or standards, regardless of any support or applications information provided by **onsemi**. "Typical" parameters which may be provided in **onsemi** data sheets and/or specifications can and do vary in different applications and actual performance may vary over time. All operating parameters, including "Typicals" must be validated for each customer application by customer's technical experts. **onsemi** does not convey any license under any of its intellectual property rights nor the rights of others. **onsemi** products are not designed, intended, or authorized for use as a critical component in life support systems or any FDA Class 3 medical devices or medical devices with a same or similar classification in a foreign jurisdiction or any devices intended for implantation in the human body. Should Buyer purchase or use **onsemi** products for any such unintended or unauthorized application, Buyer shall indemnify and hold **onsemi** and its officers, employees, subsidiaries, affiliates, and distributors harmless against all claims, costs, damages, and expenses, and reasonable attorney fees arising out of, directly or indirectly, any claim of personal injury or death associated with such unintended or unauthorized use, even if such claim alleges that **onsemi** was negligent regarding the design or manufacture of the part. **onsemi** is an Equal Opportunity/Affirmative Action Employer. This literature is subject to all applicable copyright laws and is not for resale in any manner.

ADDITIONAL INFORMATION

TECHNICAL PUBLICATIONS:
Technical Library: www.onsemi.com/design/resources/technical−documentation
onsemi Website: www.onsemi.com

ONLINE SUPPORT: www.onsemi.com/support
For additional information, please contact your local Sales Representative at
www.onsemi.com/support/sales