MOSFET – Power, Dual N-Channel, for 1-Cell Lithium-ion Battery Protection

12 V, 3.2 mΩ, 27 A

EFC6611R

V_{SSS}	$R_{SS(on)}$ MAX	$I_{S\ MAX}$
12 V	3.2 mΩ @ 4.5 V	27 A
	3.2 mΩ @ 4.0 V	
	3.2 mΩ @ 3.8 V	
	4.4 mΩ @ 3.1 V	
	6.3 mΩ @ 2.5 V	

This Power MOSFET features a low on−state resistance. This device is suitable for applications such as power switches of portable machines. Best suited for 1−cell lithium−ion battery applications.

Features

- 2.5 V Drive
- 2 kV ESD HBM
- Common−Drain Type
- ESD Diode−Protected Gate
- Pb−Free, Halogen Free and RoHS Compliance

Applications

- 1−Cell Lithium−ion Battery Charging and Discharging Switch

ELECTRICAL CONNECTION N−Channel

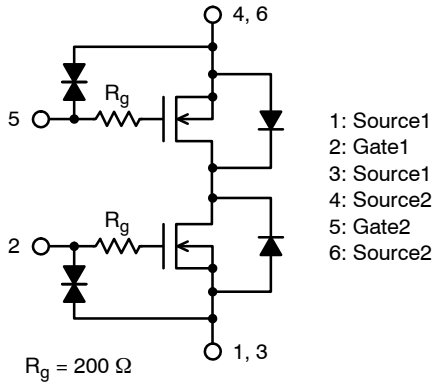

SPECIFICATIONS

ABSOLUTE MAXIMUM RATINGS (T_A = 25°C)

Parameter	Symbol	Value	Unit
Source to Source Voltage	V_{SSS}	12	V
Gate to Source Voltage	V_{GSS}	±8	V
Source Current (DC)	I_S	27	A
Source Current (Pulse) PW ≤ 100 μs, Duty Cycle ≤ 1%	I_{SP}	100	A
Total Dissipation Surface mounted on ceramic substrate (5000 mm^2 x 0.8 mm)	P_T	2.5	W
Junction Temperature	T_j	150	°C
Storage Temperature	T_{stg}	−55 to +150	°C

Stresses exceeding those listed in the Maximum Ratings table may damage the device. If any of these limits are exceeded, device functionality should not be assumed, damage may occur and reliability may be affected.

THERMAL RESISTANCE RATINGS

Parameter	Symbol	Value	Unit
Junction to Ambient Surface mounted on ceramic substrate (5000 mm^2 x 0.8 mm)	$R_{\theta JA}$	50	°C/W

CSP6, 1.77x3.54/
EFCP3517−6DGH−020
CASE 568AL

MARKING DIAGRAM

ML = Device Code
Y = Year of Production
M = Month of Assembly Operation
ZZ = Assembly Lot Number

PIN CONNECTIONS

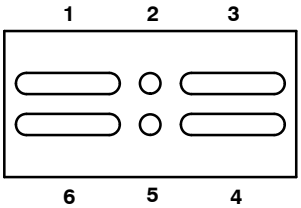

1: Source1
2: Gate1
3: Source1
4: Source2
5: Gate2
6: Source2

ORDERING INFORMATION

See detailed ordering and shipping information on page 2 of this data sheet.

© Semiconductor Components Industries, LLC, 2016

ELECTRICAL CHARACTERISTICS (T_A = 25°C)

Parameter	Symbol	Test Condition	Min	Typ	Max	Unit
Source to Source Breakdown Voltage	$V_{(BR)SSS}$	I_S = 1 mA, V_{GS} = 0 V (Test Circuit 1)	12	–	–	V
Zero−Gate Voltage Source Current	I_{SSS}	V_{SS} = 10 V, V_{GS} = 0 V (Test Circuit 1)	–	–	1	μA
Gate to Source Leakage Current	I_{GSS}	V_{GS} = ±8 V, V_{SS} = 0 V (Test Circuit 2)	–	–	±1	μA
Gate Threshold Voltage	V_{GS}(th)	V_{SS} = 6 V, I_S = 1 mA (Test Circuit 3)	0.5	–	1.3	V
Forward Transconductance	g_{FS}	V_{SS} = 6 V, I_S = 3 A (Test Circuit 4)	–	19	–	S
Static Source to Source On−State Resistance	$R_{SS(on)}1$	I_S = 5 A, V_{GS} = 4.5 V (Test Circuit 5)	1.8	2.3	3.2	mΩ
	$R_{SS(on)}2$	I_S = 5 A, V_{GS} = 4.0 V (Test Circuit 5)	1.9	2.4	3.2	mΩ
	$R_{SS(on)}3$	I_S = 5 A, V_{GS} = 3.8 V (Test Circuit 5)	2.0	2.6	3.2	mΩ
	$R_{SS(on)}4$	I_S = 5 A, V_{GS} = 3.1 V (Test Circuit 5)	2.1	3.3	4.4	mΩ
	$R_{SS(on)}5$	I_S = 5 A, V_{GS} = 2.5 V (Test Circuit 5)	2.7	4.0	6.3	mΩ
Turn−ON Delay Time	$t_{d(on)}$	V_{SS} = 6 V, V_{GS} = 4.5 V, I_S = 3 A (Test Circuit 6)	–	80	–	ns
Rise Time	t_r		–	570	–	ns
Turn−OFF Delay Time	$t_{d(off)}$		–	38,000	–	ns
Fall Time	t_f		–	17,700	–	ns
Total Gate Charge	Q_g	V_{SS} = 6 V, V_{GS} = 4.5 V, I_S = 27 A (Test Circuit 7)	–	100	–	nC
Forward Source to Source Voltage	$V_{F(S-S)}$	I_S = 3 A, V_{GS} = 0 V (Test Circuit 8)	–	0.75	1.2	V

Product parametric performance is indicated in the Electrical Characteristics for the listed test conditions, unless otherwise noted. Product performance may not be indicated by the Electrical Characteristics if operated under different conditions.

ORDERING INFORMATION

Device	Marking	Package	Shipping (Qty / Packing)†
EFC6611R−TF	ML	CSP6, 1.77 × 3.54 EFCP3517-6DGH-020 (Pb−Free / Halogen Free)	5,000 / Tape & Reel

†For information on tape and reel specifications, including part orientation and tape sizes, please refer to our Tape and Reel Packaging Specifications Brochure, BRD8011/D.

TEST CIRCUITS ARE EXAMPLE OF MEASURING FET1 SIDE

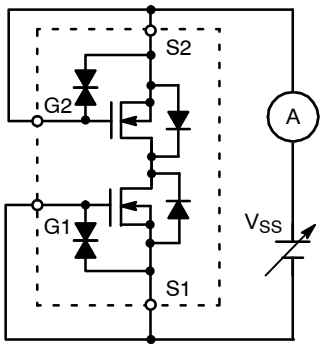

Figure 1. Test Circuit 1 – V_{SSS}/I_{SSS}

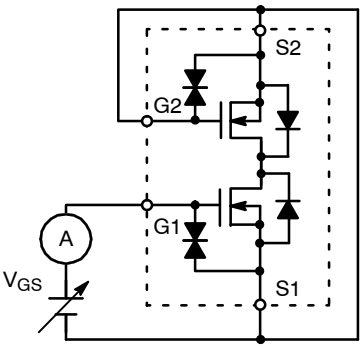

When FET1 is measured, Gate and Source of FET2 are short−circuited.

Figure 2. Test Circuit 2 – I_{GSS}

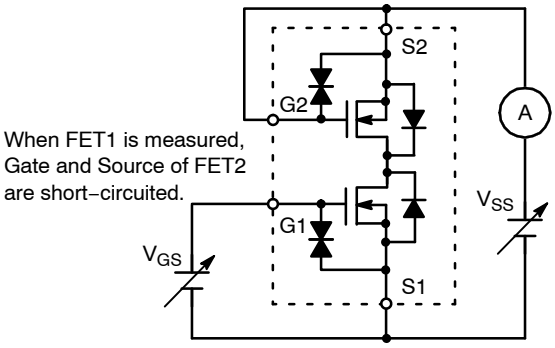

Figure 3. Test Circuit 3 – $V_{GS}(th)$

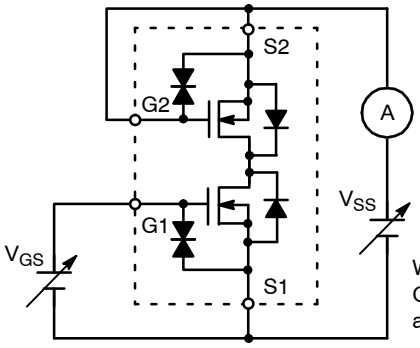

When FET1 is measured, Gate and Source of FET2 are short−circuited.

Figure 4. Test Circuit 4 – g_{FS}

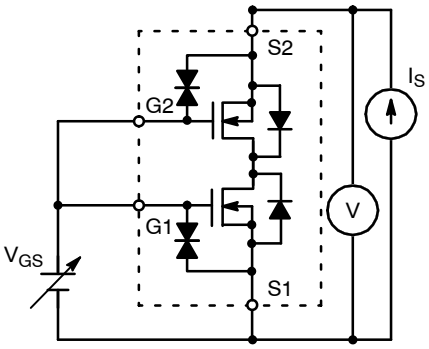

Figure 5. Test Circuit 5 – $R_{SS(on)}$

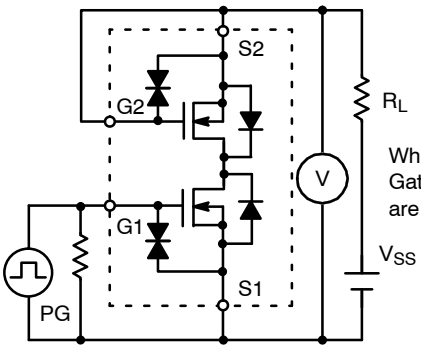

When FET1 is measured, Gate and Source of FET2 are short−circuited.

Figure 6. Test Circuit 6 – $t_{d(on)}$, t_r, $t_{d(off)}$, t_f

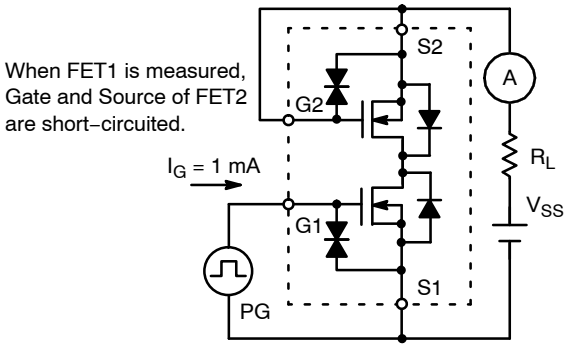

Figure 7. Test Circuit 7 – Q_g

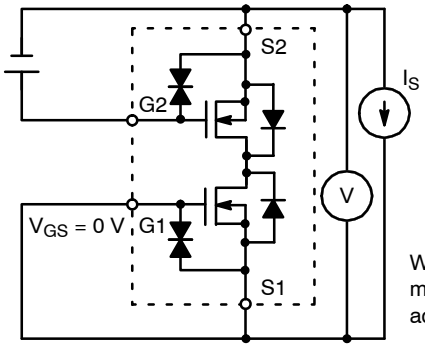

When FET1 is measured, +4.5 V is added to V_{GS} of FET2.

Figure 8. Test Circuit 8 – $V_{F(S-S)}$

NOTE: When FET2 is measured, the position of FET1 and FET2 is switched.

TYPICAL CHARACTERISTICS

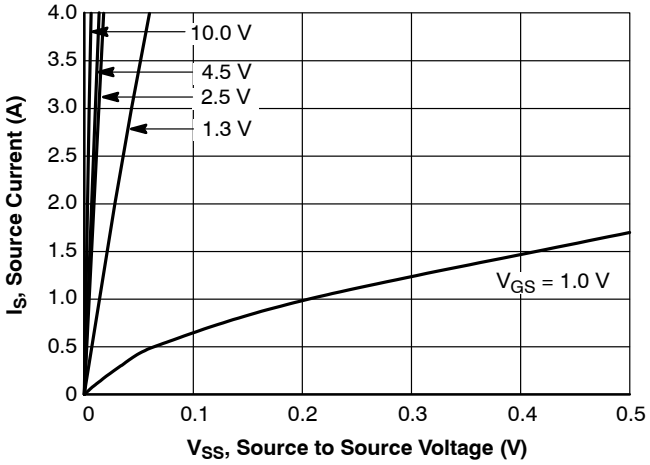

Figure 9. I_S – V_{SS}

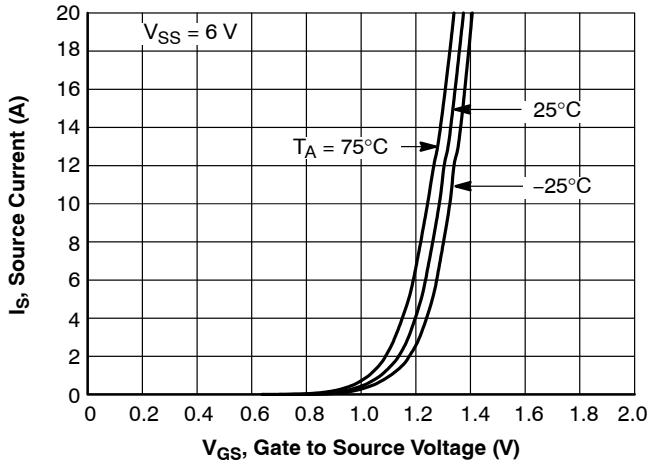

Figure 10. I_S – V_{GS}(th)

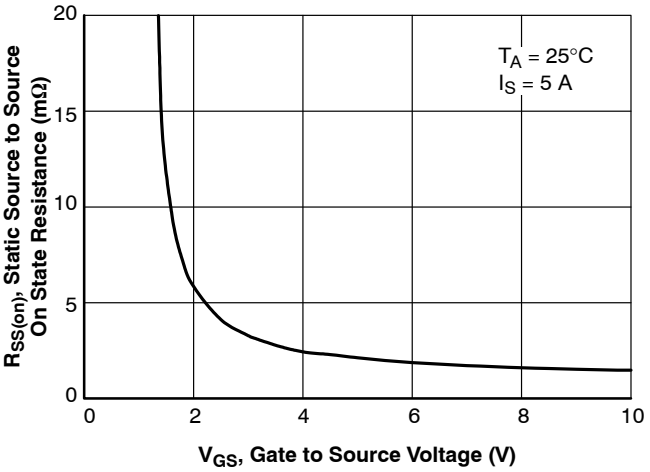

Figure 11. $R_{SS(on)}$ – V_{GS}

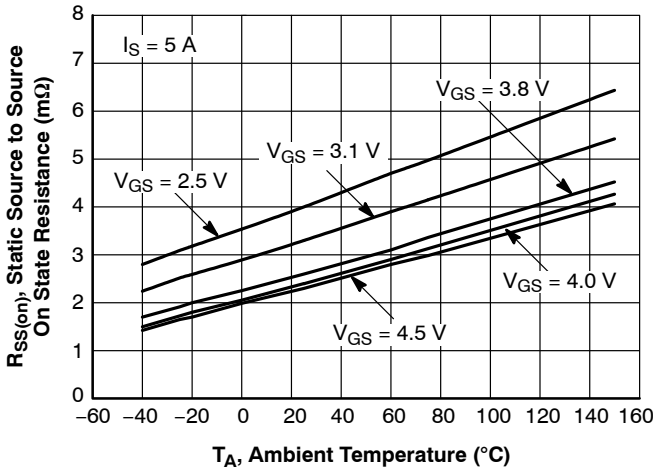

Figure 12. $R_{SS(on)}$ – T_A

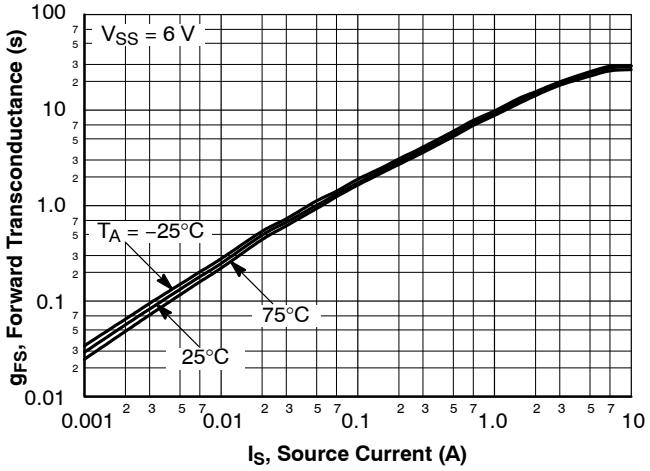

Figure 13. g_{FS} – I_S

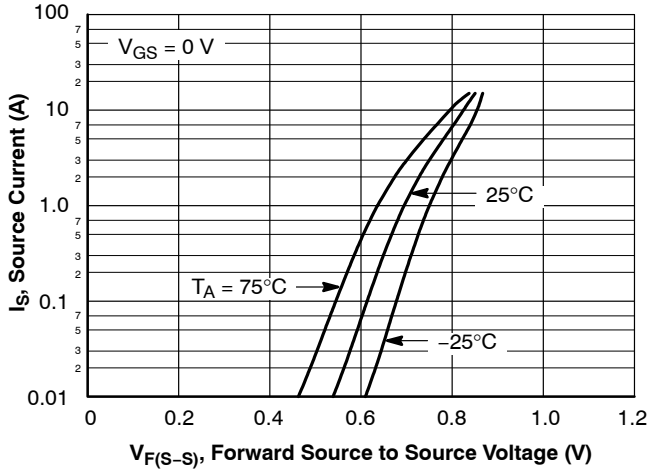

Figure 14. I_S – $V_{F(S-S)}$

TYPICAL CHARACTERISTICS (Continued)

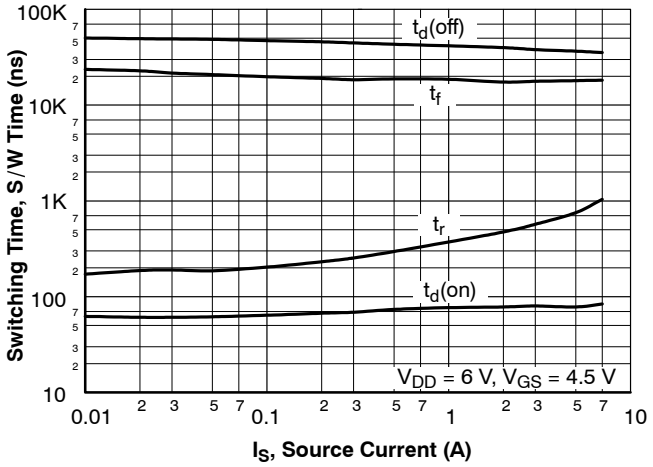

Figure 15. S/W Time – I_S

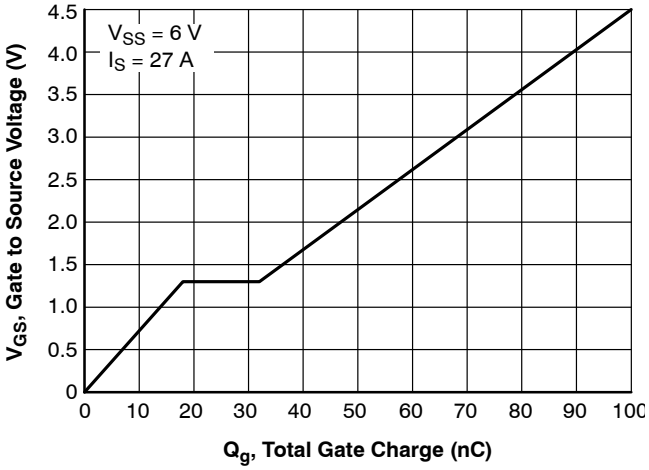

Figure 16. V_{GS} – Q_g

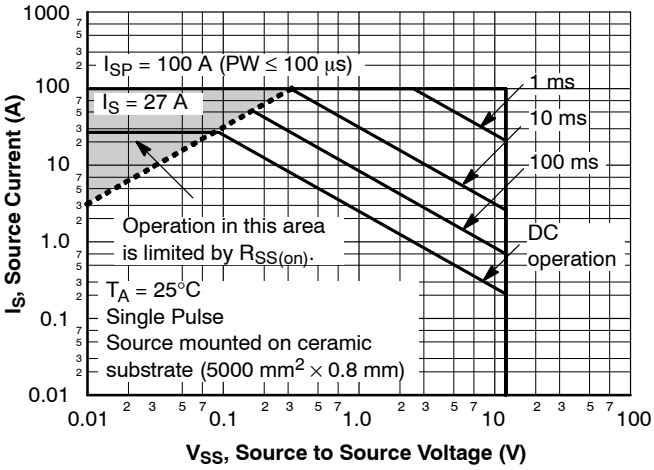

Figure 17. SOA

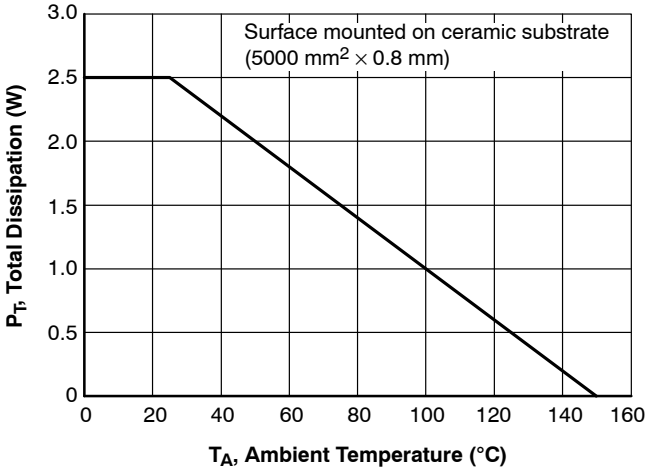

Figure 18. P_T – T_A

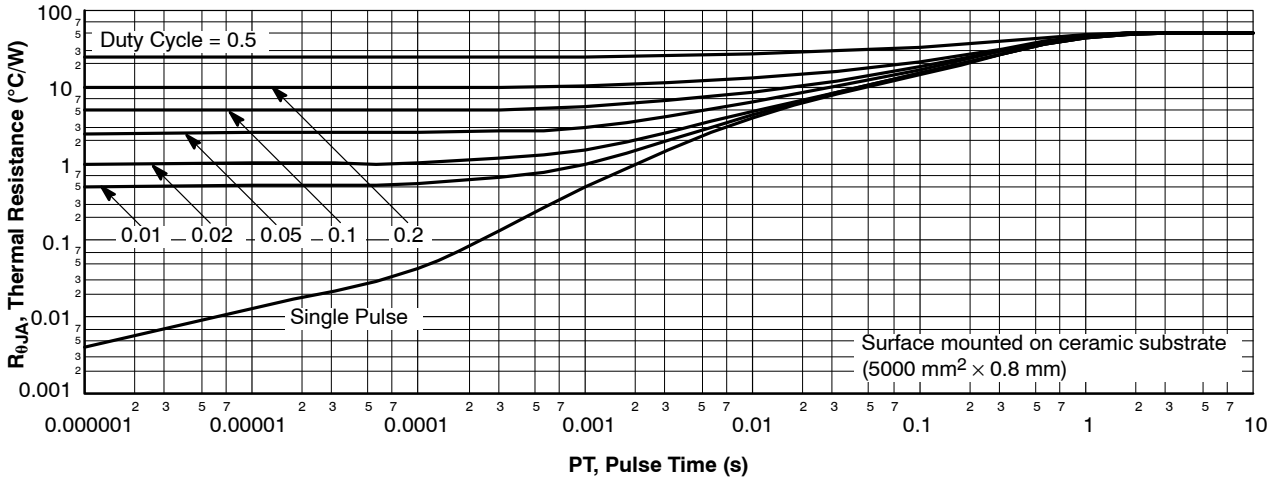

Figure 19. $R_{\theta JA}$ – Pulse Time

SCALE 4:1

CSP6, 1.77x3.54 / EFCP3517−6DGH−020
CASE 568AL
ISSUE O

DATE 23 OCT 2013

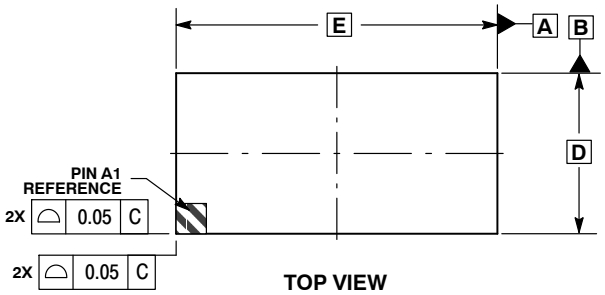

TOP VIEW

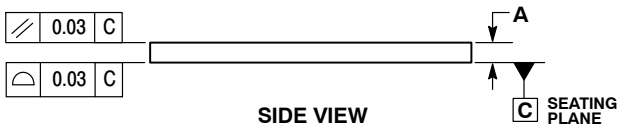

SIDE VIEW

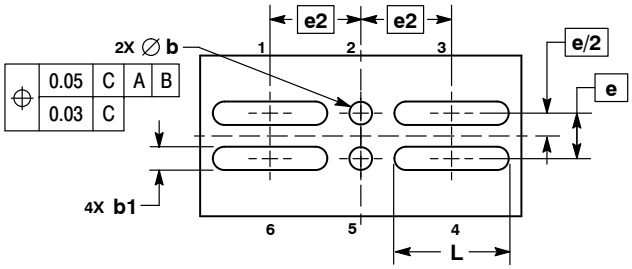

BOTTOM VIEW

NOTES:
1. DIMENSIONING AND TOLERANCING PER ASME Y14.5M, 1994.
2. CONTROLLING DIMENSION: MILLIMETERS.

DIM	MILLIMETERS MIN	MILLIMETERS MAX
A	–––	0.22
b	0.22	0.28
b1	0.22	0.28
D	1.77 BSC	
E	3.54 BSC	
e	0.50 BSC	
e2	1.00 BSC	
L	1.22	1.28

RECOMMENDED SOLDERING FOOTPRINT*

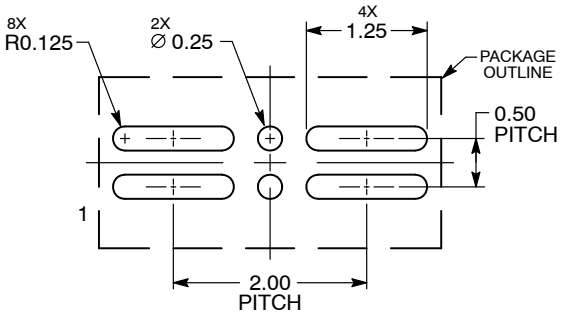

DIMENSIONS: MILLIMETERS

*For additional information on our Pb−Free strategy and soldering details, please download the ON Semiconductor Soldering and Mounting Techniques Reference Manual, SOLDERRM/D.

DOCUMENT NUMBER:	98AON79069F	Electronic versions are uncontrolled except when accessed directly from the Document Repository. Printed versions are uncontrolled except when stamped "CONTROLLED COPY" in red.
DESCRIPTION:	CSP6, 1.77X3.54 / EFCP3517−6DGH−020	PAGE 1 OF 1

onsemi and onsemi are trademarks of Semiconductor Components Industries, LLC dba **onsemi** or its subsidiaries in the United States and/or other countries. **onsemi** reserves the right to make changes without further notice to any products herein. **onsemi** makes no warranty, representation or guarantee regarding the suitability of its products for any particular purpose, nor does **onsemi** assume any liability arising out of the application or use of any product or circuit, and specifically disclaims any and all liability, including without limitation special, consequential or incidental damages. **onsemi** does not convey any license under its patent rights nor the rights of others.

onsemi, onsemi, and other names, marks, and brands are registered and/or common law trademarks of Semiconductor Components Industries, LLC dba "**onsemi**" or its affiliates and/or subsidiaries in the United States and/or other countries. **onsemi** owns the rights to a number of patents, trademarks, copyrights, trade secrets, and other intellectual property. A listing of **onsemi**'s product/patent coverage may be accessed at www.onsemi.com/site/pdf/Patent−Marking.pdf. **onsemi** reserves the right to make changes at any time to any products or information herein, without notice. The information herein is provided "as−is" and **onsemi** makes no warranty, representation or guarantee regarding the accuracy of the information, product features, availability, functionality, or suitability of its products for any particular purpose, nor does **onsemi** assume any liability arising out of the application or use of any product or circuit, and specifically disclaims any and all liability, including without limitation special, consequential or incidental damages. Buyer is responsible for its products and applications using **onsemi** products, including compliance with all laws, regulations and safety requirements or standards, regardless of any support or applications information provided by **onsemi**. "Typical" parameters which may be provided in **onsemi** data sheets and/or specifications can and do vary in different applications and actual performance may vary over time. All operating parameters, including "Typicals" must be validated for each customer application by customer's technical experts. **onsemi** does not convey any license under any of its intellectual property rights nor the rights of others. **onsemi** products are not designed, intended, or authorized for use as a critical component in life support systems or any FDA Class 3 medical devices or medical devices with a same or similar classification in a foreign jurisdiction or any devices intended for implantation in the human body. Should Buyer purchase or use **onsemi** products for any such unintended or unauthorized application, Buyer shall indemnify and hold **onsemi** and its officers, employees, subsidiaries, affiliates, and distributors harmless against all claims, costs, damages, and expenses, and reasonable attorney fees arising out of, directly or indirectly, any claim of personal injury or death associated with such unintended or unauthorized use, even if such claim alleges that **onsemi** was negligent regarding the design or manufacture of the part. **onsemi** is an Equal Opportunity/Affirmative Action Employer. This literature is subject to all applicable copyright laws and is not for resale in any manner.

ADDITIONAL INFORMATION

TECHNICAL PUBLICATIONS:
Technical Library: www.onsemi.com/design/resources/technical−documentation
onsemi Website: www.onsemi.com

ONLINE SUPPORT: www.onsemi.com/support
For additional information, please contact your local Sales Representative at
www.onsemi.com/support/sales