CAV25010, CAV25020, CAV25040

1-Kb, 2-Kb and 4-Kb SPI Serial CMOS EEPROM

ON Semiconductor®

http://onsemi.com

SOIC−8
V SUFFIX
CASE 751BD

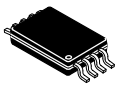

TSSOP−8
Y SUFFIX
CASE 948AL

Description

The CAV25010/20/40 are 1−Kb/2−Kb/4−Kb Serial CMOS EEPROM devices internally organized as 128x8/256x8/512x8 bits. They feature a 16−byte page write buffer and support the Serial Peripheral Interface (SPI) protocol. The device is enabled through a Chip Select ($\overline{CS}$) input. In addition, the required bus signals are a clock input (SCK), data input (SI) and data output (SO) lines. The $\overline{HOLD}$ input may be used to pause any serial communication with the CAV25010/20/40 device. These devices feature software and hardware write protection, including partial as well as full array protection.

Features

- Automotive Temperature Grade 1 (−40°C to +125°C)
- 10 MHz SPI Compatible
- 2.5 V to 5.5 V Supply Voltage Range
- SPI Modes (0,0) & (1,1)
- 16−byte Page Write Buffer
- Self−timed Write Cycle
- Hardware and Software Protection
- Block Write Protection
  – Protect 1/4, 1/2 or Entire EEPROM Array
- Low Power CMOS Technology
- 1,000,000 Program/Erase Cycles
- 100 Year Data Retention
- Industrial and Extended Temperature Range
- SOIC and TSSOP 8−Lead Packages
- These Devices are Pb−Free, Halogen Free/BFR Free, and RoHS Compliant

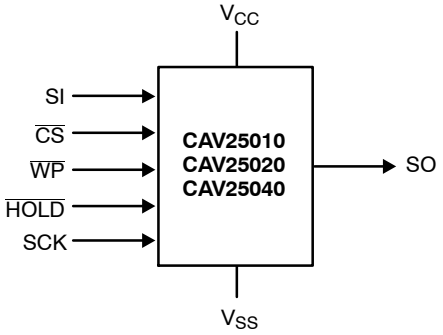

Figure 1. Functional Symbol

PIN CONFIGURATION

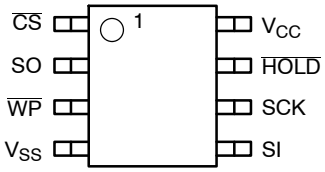

SOIC (V), TSSOP (Y)

For the location of Pin 1, please consult the corresponding package drawing.

PIN FUNCTION

Pin Name	Function
$\overline{CS}$	Chip Select
SO	Serial Data Output
$\overline{WP}$	Write Protect
V_{SS}	Ground
SI	Serial Data Input
SCK	Serial Clock
$\overline{HOLD}$	Hold Transmission Input
V_{CC}	Power Supply

ORDERING INFORMATION

See detailed ordering and shipping information in the package dimensions section on page 12 of this data sheet.

© Semiconductor Components Industries, LLC, 2012

MARKING DIAGRAMS

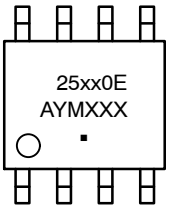

(SOIC−8)

25010E = CAV25010
25020E = CAV25020
25040E = CAV25040
A = Assembly Location
Y = Production Year (Last Digit)
M = Production Month (1−9, O, N, D)
XXX = Last Three Digits of Assembly Lot Number
▪ = Pb−Free Package

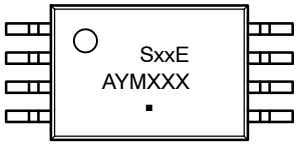

(TSSOP−8)

S01E = CAV25010
S02E = CAV25020
S04E = CAV25040
A = Assembly Location
Y = Production Year (Last Digit)
M = Production Month (1−9, O, N, D)
XXX = Last Three Digits of Assembly Lot Number
▪ = Pb−Free Package

Table 1. ABSOLUTE MAXIMUM RATINGS

Parameters	Ratings	Units
Operating Temperature	−45 to +130	°C
Storage Temperature	−65 to +150	°C
Voltage on any Pin with Respect to Ground (Note 1)	−0.5 to V_{CC} + 0.5	V

Stresses exceeding Maximum Ratings may damage the device. Maximum Ratings are stress ratings only. Functional operation above the Recommended Operating Conditions is not implied. Extended exposure to stresses above the Recommended Operating Conditions may affect device reliability.

Table 2. RELIABILITY CHARACTERISTICS (Note 2)

Symbol	Parameter	Min	Units
N_{END} (Note 3)	Endurance	1,000,000	Program / Erase Cycles
T_{DR}	Data Retention	100	Years

Table 3. D.C. OPERATING CHARACTERISTICS (V_{CC} = 2.5 V to 5.5 V, T_A = −40°C to +125°C, unless otherwise specified.)

Symbol	Parameter	Test Conditions	Min	Max	Units
I_{CCR}	Supply Current (Read Mode)	Read, V_{CC} = 5.5 V, 10 MHz, SO open		2	mA
I_{CCW}	Supply Current (Write Mode)	Write, V_{CC} = 5.5 V, 10 MHz, SO open		2	mA
I_{SB1}	Standby Current	V_{IN} = GND or V_{CC}, $\overline{CS}$ = V_{CC}, $\overline{WP}$ = V_{CC}, V_{CC} = 5.5 V		2	μA
I_{SB2}	Standby Current	V_{IN} = GND or V_{CC}, $\overline{CS}$ = V_{CC}, $\overline{WP}$ = GND, V_{CC} = 5.5 V		5	μA
I_L	Input Leakage Current	V_{IN} = GND or V_{CC}	−2	2	μA
I_{LO}	Output Leakage Current	$\overline{CS}$ = V_{CC}, V_{OUT} = GND or V_{CC}	−1	2	μA
V_{IL}	Input Low Voltage		−0.5	0.3 V_{CC}	V
V_{IH}	Input High Voltage		0.7 V_{CC}	V_{CC} + 0.5	V
V_{OL}	Output Low Voltage	I_{OL} = 3.0 mA		0.4	V
V_{OH}	Output High Voltage	I_{OH} = −1.6 mA	V_{CC} − 0.8 V		V

Table 4. PIN CAPACITANCE (Note 2) (T_A = 25°C, f = 1.0 MHz, V_{CC} = +5.0 V)

Symbol	Test	Conditions	Min	Typ	Max	Units
C_{OUT}	Output Capacitance (SO)	V_{OUT} = 0 V			8	pF
C_{IN}	Input Capacitance ($\overline{CS}$, SCK, SI, $\overline{WP}$, $\overline{HOLD}$)	V_{IN} = 0 V			8	pF

1. The DC input voltage on any pin should not be lower than −0.5 V or higher than V_{CC} + 0.5 V. During transitions, the voltage on any pin may undershoot to no less than −1.5 V or overshoot to no more than V_{CC} + 1.5 V, for periods of less than 20 ns.
2. These parameters are tested initially and after a design or process change that affects the parameter according to appropriate AEC−Q100 and JEDEC test methods.
3. Page Mode, V_{CC} = 5 V, 25°C.

Table 5. A.C. CHARACTERISTICS (T_A = −40°C to +125°C) (Note 4)

Symbol	Parameter	V_{CC} = 2.5 V − 5.5 V		Units
		Min	Max	
f_{SCK}	Clock Frequency	DC	10	MHz
t_{SU}	Data Setup Time	10		ns
t_H	Data Hold Time	10		ns
t_{WH}	SCK High Time	40		ns
t_{WL}	SCK Low Time	40		ns
t_{LZ}	$\overline{HOLD}$ to Output Low Z		25	ns
t_{RI} (Note 5)	Input Rise Time		2	μs
t_{FI} (Note 5)	Input Fall Time		2	μs
t_{HD}	$\overline{HOLD}$ Setup Time	0		ns
t_{CD}	$\overline{HOLD}$ Hold Time	10		ns
t_V	Output Valid from Clock Low		35	ns
t_{HO}	Output Hold Time	0		ns
t_{DIS}	Output Disable Time		20	ns
t_{HZ}	$\overline{HOLD}$ to Output High Z		25	ns
t_{CS}	$\overline{CS}$ High Time	40		ns
t_{CSS}	$\overline{CS}$ Setup Time	30		ns
t_{CSH}	$\overline{CS}$ Hold Time	30		ns
t_{CNS}	$\overline{CS}$ Inactive Setup Time	20		ns
t_{CNH}	$\overline{CS}$ Inactive Hold Time	20		ns
t_{WPS}	$\overline{WP}$ Setup Time	10		ns
t_{WPH}	$\overline{WP}$ Hold Time	10		ns
t_{WC} (Note 6)	Write Cycle Time		5	ms

4. AC Test Conditions:
   Input Pulse Voltages: 0.3 V_{CC} to 0.7 V_{CC}
   Input rise and fall times: ≤ 10 ns
   Input and output reference voltages: 0.5 V_{CC}
   Output load: current source $I_{OL\ max}/I_{OH\ max}$; C_L = 30 pF
5. This parameter is tested initially and after a design or process change that affects the parameter.
6. t_{WC} is the time from the rising edge of $\overline{CS}$ after a valid write sequence to the end of the internal write cycle.

Table 6. POWER−UP TIMING (Notes 7, 8)

Symbol	Parameter	Min	Max	Units
t_{PUR}	Power−up to Read Operation	0.1	1	ms
t_{PUW}	Power−up to Write Operation	0.1	1	ms

7. This parameter is tested initially and after a design or process change that affects the parameter.
8. t_{PUR} and t_{PUW} are the delays required from the time V_{CC} is stable at the operating voltage until the specified operation can be initiated.

Pin Description

SI: The serial data input pin accepts op−codes, addresses and data. In SPI modes (0,0) and (1,1) input data is latched on the rising edge of the SCK clock input.

SO: The serial data output pin is used to transfer data out of the device. In SPI modes (0,0) and (1,1) data is shifted out on the falling edge of the SCK clock.

SCK: The serial clock input pin accepts the clock provided by the host and used for synchronizing communication between host and CAV25010/20/40.

$\overline{CS}$: The chip select input pin is used to enable/disable the CAV25010/20/40. When $\overline{CS}$ is high, the SO output is tri−stated (high impedance) and the device is in Standby Mode (unless an internal write operation is in progress). *Every communication session between host and CAV25010/20/40 must be preceded by a high to low transition and concluded with a low to high transition of the $\overline{CS}$ input.*

$\overline{WP}$: The write protect input pin will allow all write operations to the device when held high. When $\overline{WP}$ pin is tied low all write operations are inhibited.

$\overline{HOLD}$: The $\overline{HOLD}$ input pin is used to pause transmission between host and CAV25010/20/40, without having to retransmit the entire sequence at a later time. To pause, $\overline{HOLD}$ must be taken low and to resume it must be taken back high, with the SCK input low during both transitions. When not used for pausing, the $\overline{HOLD}$ input should be tied to V_{CC}, either directly or through a resistor.

Functional Description

The CAV25010/20/40 devices support the Serial Peripheral Interface (SPI) bus protocol, modes (0,0) and (1,1). The device contains an 8−bit instruction register. The instruction set and associated op−codes are listed in Table 7.

Reading data stored in the CAV25010/20/40 is accomplished by simply providing the READ command and an address. Writing to the CAV25010/20/40, in addition to a WRITE command, address and data, also requires enabling the device for writing by first setting certain bits in a Status Register, as will be explained later.

After a high to low transition on the $\overline{CS}$ input pin, the CAV25010/20/40 will accept any one of the six instruction op−codes listed in Table 7 and will ignore all other possible 8−bit combinations. The communication protocol follows the timing from Figure 2.

Table 7. INSTRUCTION SET (Note 9)

Instruction	Opcode	Operation
WREN	0000 0110	Enable Write Operations
WRDI	0000 0100	Disable Write Operations
RDSR	0000 0101	Read Status Register
WRSR	0000 0001	Write Status Register
READ	0000 X011	Read Data from Memory
WRITE	0000 X010	Write Data to Memory

9. X = 0 for CAV25010, CAV25020. X = A8 for CAV25040

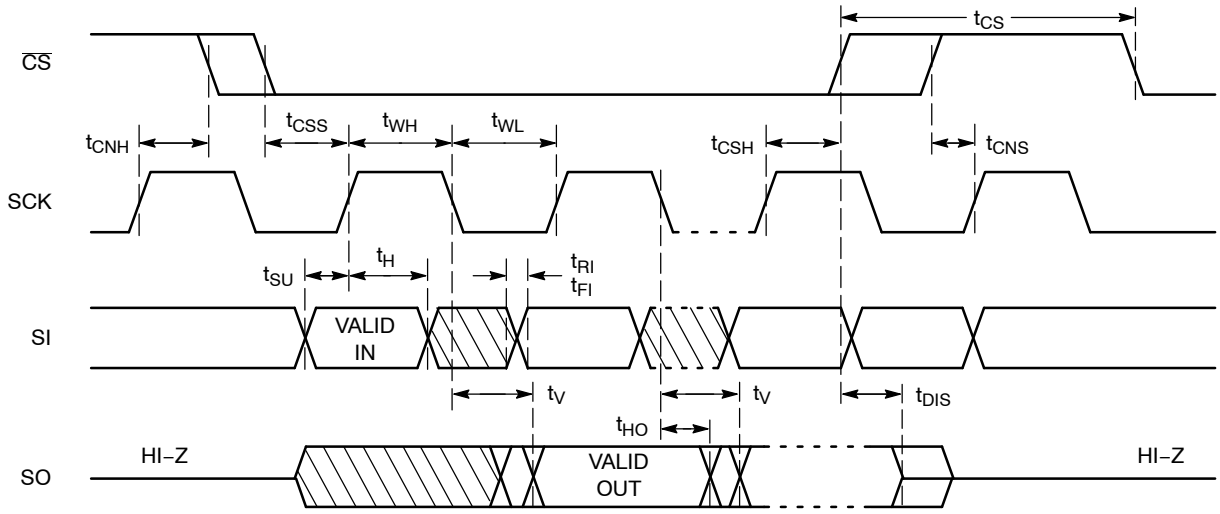

Figure 2. Synchronous Data Timing

Status Register

The Status Register, as shown in Table 8, contains a number of status and control bits.

The $\overline{RDY}$ (Ready) bit indicates whether the device is busy with a write operation. This bit is automatically set to 1 during an internal write cycle, and reset to 0 when the device is ready to accept commands. For the host, this bit is read only.

The WEL (Write Enable Latch) bit is set/reset by the WREN/WRDI commands. When set to 1, the device is in a Write Enable state and when set to 0, the device is in a Write Disable state.

The BP0 and BP1 (Block Protect) bits determine which blocks are currently write protected. They are set by the user with the WRSR command and are non−volatile. The user is allowed to protect a quarter, one half or the entire memory, by setting these bits according to Table 9. The protected blocks then become read−only.

Table 8. STATUS REGISTER

7	6	5	4	3	2	1	0
1	1	1	1	BP1	BP0	WEL	$\overline{\text{RDY}}$

Table 9. BLOCK PROTECTION BITS

Status Register Bits		Array Address Protected	Protection
BP1	BP0		
0	0	None	No Protection
0	1	CAV25010: 060−07F, CAV25020: 0C0−0FF, CAV25040: 180−1FF	Quarter Array Protection
1	0	CAV25010: 040−07F, CAV25020: 080−0FF, CAV25040: 100−1FF	Half Array Protection
1	1	CAV25010: 000−07F, CAV25020: 000−0FF, CAV25040: 000−1FF	Full Array Protection

WRITE OPERATIONS

The CAV25010/20/40 device powers up into a write disable state. The device contains a Write Enable Latch (WEL) which must be set before attempting to write to the memory array or to the status register. In addition, the address of the memory location(s) to be written must be outside the protected area, as defined by BP0 and BP1 bits from the status register.

Write Enable and Write Disable

The internal Write Enable Latch and the corresponding Status Register WEL bit are set by sending the WREN instruction to the CAV25010/20/40. Care must be taken to take the $\overline{\text{CS}}$ input high after the WREN instruction, as otherwise the Write Enable Latch will not be properly set. WREN timing is illustrated in Figure 3. The WREN instruction must be sent prior to any WRITE or WRSR instruction.

The internal write enable latch is reset by sending the WRDI instruction as shown in Figure 4. Disabling write operations by resetting the WEL bit, will protect the device against inadvertent writes.

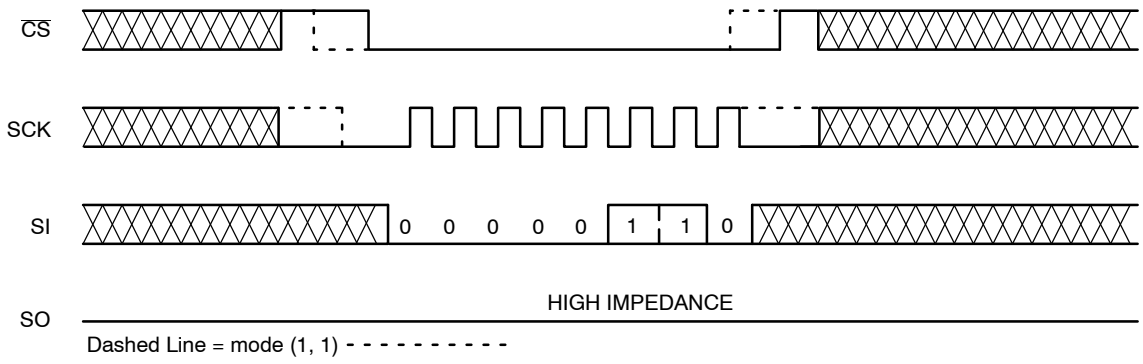

Figure 3. WREN Timing

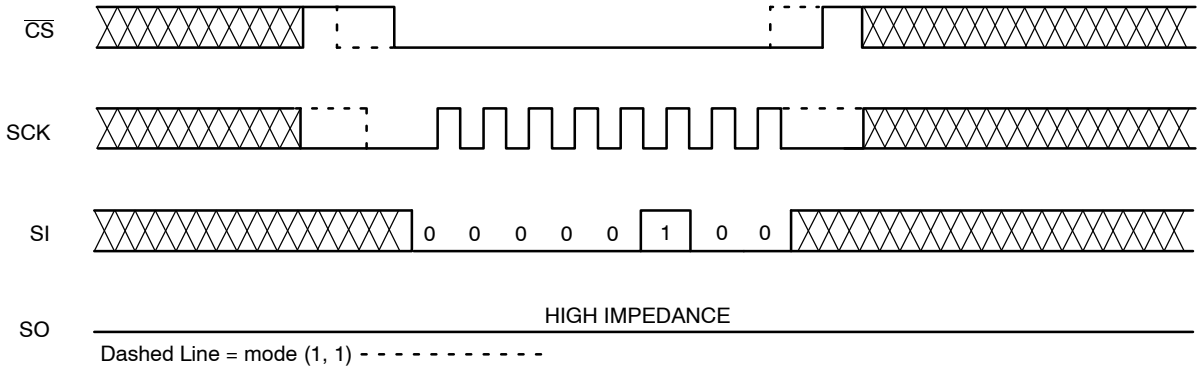

Figure 4. WRDI Timing

Byte Write

Once the WEL bit is set, the user may execute a write sequence, by sending a WRITE instruction, a 8−bit address and data as shown in Figure 5. For the CAV25040, bit 3 of the write instruction opcode contains A8 address bit. Internal programming will start after the low to high $\overline{CS}$ transition. During an internal write cycle, all commands, except for RDSR (Read Status Register) will be ignored. The $\overline{RDY}$ bit will indicate if the internal write cycle is in progress ($\overline{RDY}$ high), or the device is ready to accept commands ($\overline{RDY}$ low).

Page Write

After sending the first data byte to the CAV25010/20/40, the host may continue sending data, up to a total of 16 bytes, according to timing shown in Figure 6. After each data byte, the lower order address bits are automatically incremented, while the higher order address bits (page address) remain unchanged. If during this process the end of page is exceeded, then loading will “roll over” to the first byte in the page, thus possibly overwriting previously loaded data. Following completion of the write cycle, the CAV25010/20/40 is automatically returned to the write disable state.

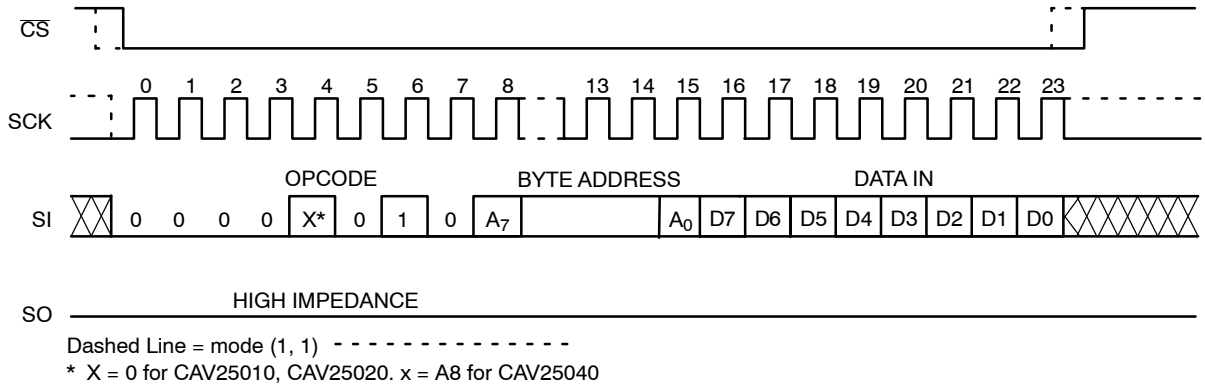

Figure 5. Byte WRITE Timing

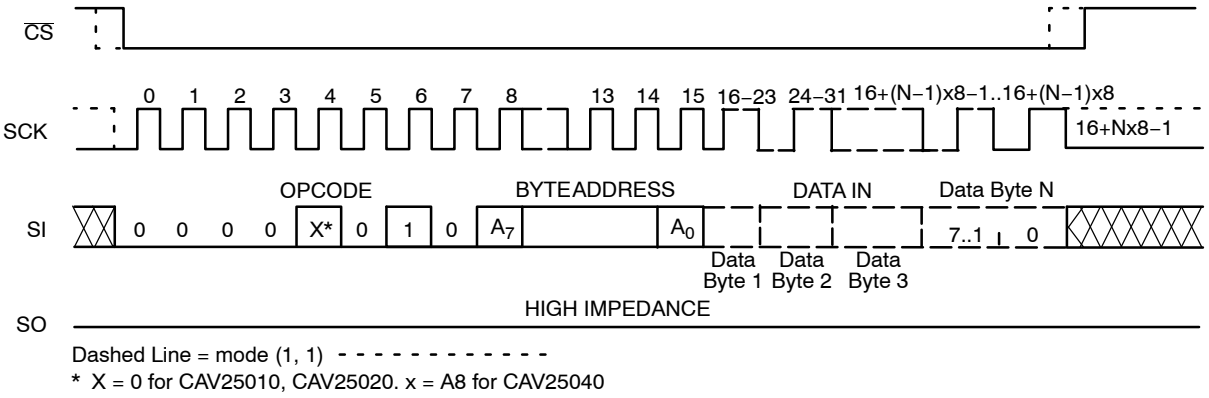

Figure 6. Page WRITE Timing

Write Status Register

The Status Register is written by sending a WRSR instruction according to timing shown in Figure 7. Only bits 2 and 3 can be written using the WRSR command.

Write Protection

When $\overline{WP}$ input is low all write operations to the memory array and Status Register are inhibited. $\overline{WP}$ going low while $\overline{CS}$ is still low will interrupt a write operation. If the internal write cycle has already been initiated, $\overline{WP}$ going low will have no effect on any write operation to the Status Register or memory array. The $\overline{WP}$ input timing is shown in Figure 8.

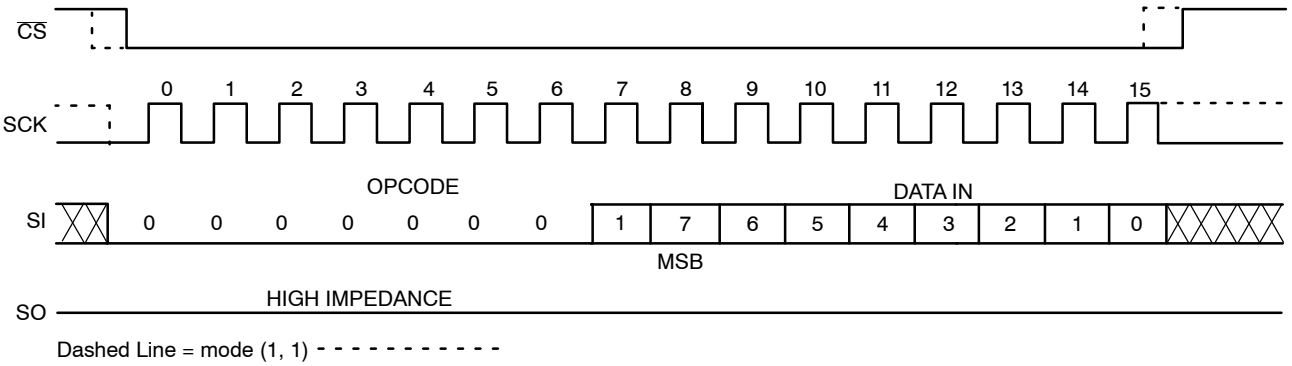

Figure 7. WRSR Timing

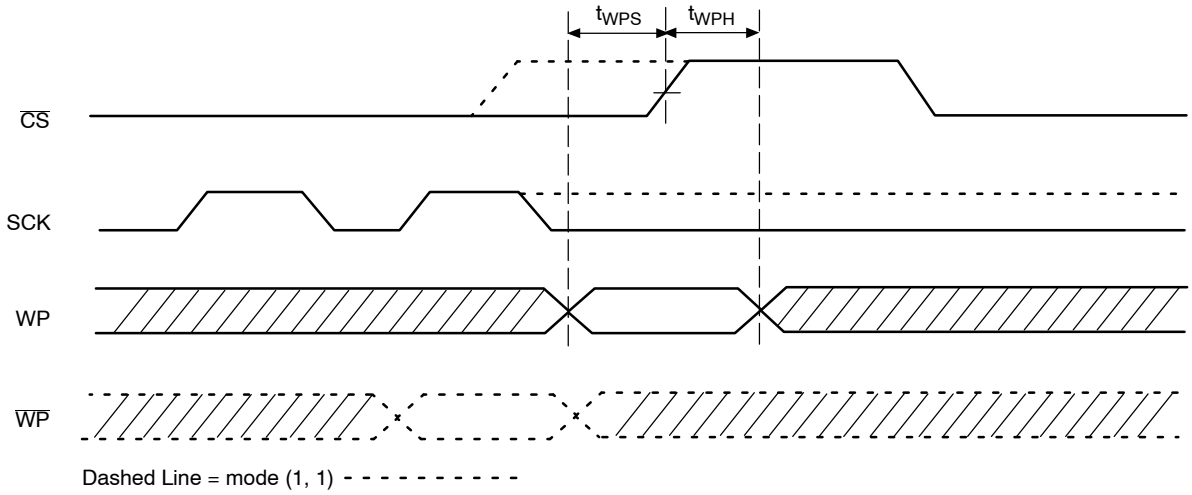

Figure 8. $\overline{WP}$ Timing

READ OPERATIONS

Read from Memory Array

To read from memory, the host sends a READ instruction followed by a 8−bit address (for the CAV25040, bit 3 of the read instruction opcode contains A8 address bit).

After receiving the last address bit, the CAV25010/20/40 will respond by shifting out data on the SO pin (as shown in Figure 9). Sequentially stored data can be read out by simply continuing to run the clock. The internal address pointer is automatically incremented to the next higher address as data is shifted out. After reaching the highest memory address, the address counter "rolls over" to the lowest memory address, and the read cycle can be continued indefinitely. The read operation is terminated by taking $\overline{CS}$ high.

Read Status Register

To read the status register, the host simply sends a RDSR command. After receiving the last bit of the command, the CAV25010/20/40 will shift out the contents of the status register on the SO pin (Figure 10). The status register may be read at any time, including during an internal write cycle.

While the internal write cycle is in progress, the RDSR command will output the full content of the status register. For easy detection of the internal write cycle completion, both during writing to the memory array and to the status register, we recommend sampling the RDY bit only through the polling routine. After detecting the RDY bit "0", the next RDSR instruction will always output the expected content of the status register.

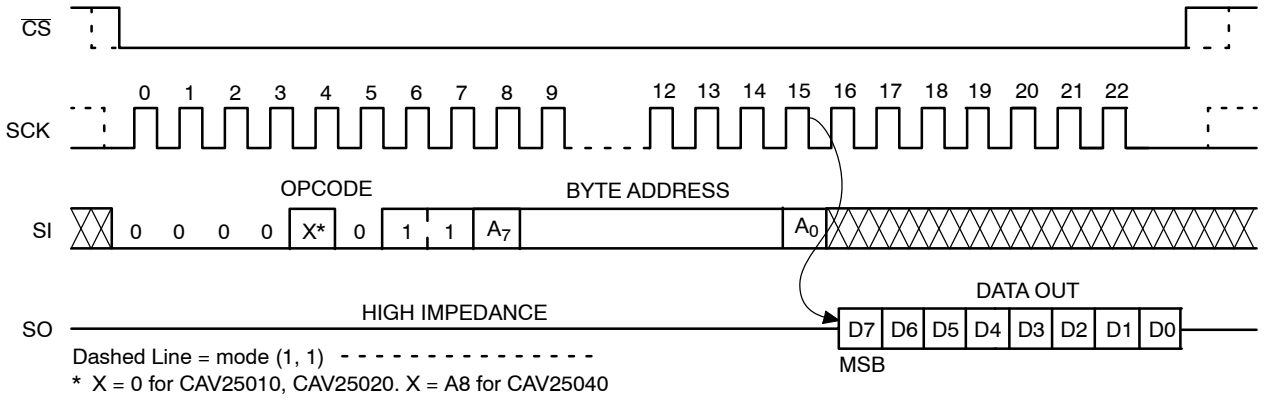

Figure 9. READ Timing

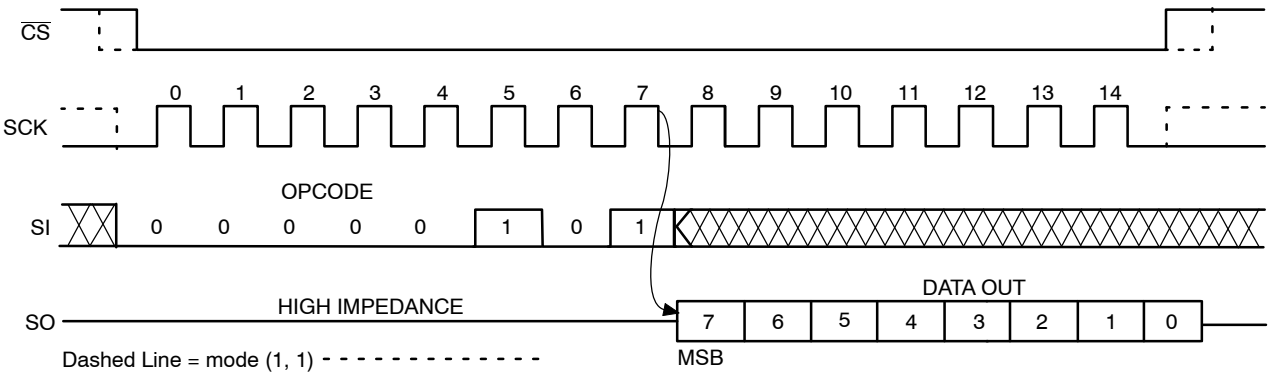

Figure 10. RDSR Timing

Hold Operation

The $\overline{HOLD}$ input can be used to pause communication between host and CAV25010/20/40. To pause, $\overline{HOLD}$ must be taken low while SCK is low (Figure 11). During the hold condition the device must remain selected ($\overline{CS}$ low). During the pause, the data output pin (SO) is tri−stated (high impedance) and SI transitions are ignored. To resume communication, $\overline{HOLD}$ must be taken high while SCK is low.

Design Considerations

The CAV25010/20/40 devices incorporate Power−On Reset (POR) circuitry which protects the internal logic against powering up in the wrong state. The device will power up into Standby mode after V_{CC} exceeds the POR trigger level and will power down into Reset mode when V_{CC} drops below the POR trigger level. This bi−directional POR behavior protects the device against 'brown−out' failure following a temporary loss of power.

The CAV25010/20/40 device powers up in a write disable state and in a low power standby mode. A WREN instruction must be issued prior to any writes to the device.

After power up, the $\overline{CS}$ pin must be brought low to enter a ready state and receive an instruction. After a successful byte/page write or status register write, the device goes into a write disable mode. The $\overline{CS}$ input must be set high after the proper number of clock cycles to start the internal write cycle. Access to the memory array during an internal write cycle is ignored and programming is continued. Any invalid op−code will be ignored and the serial output pin (SO) will remain in the high impedance state.

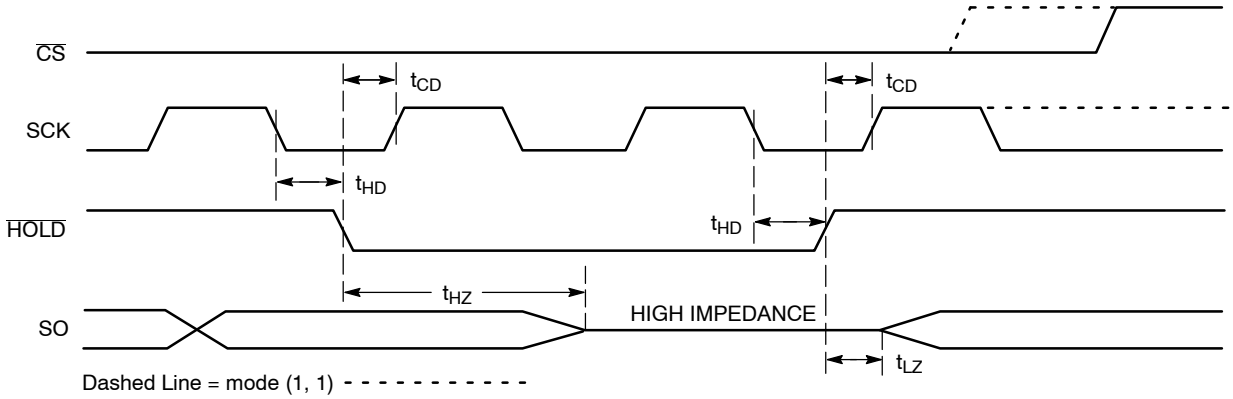

Figure 11. $\overline{HOLD}$ Timing

SOIC−8, 150 mils
CASE 751BD
ISSUE O

DATE 19 DEC 2008

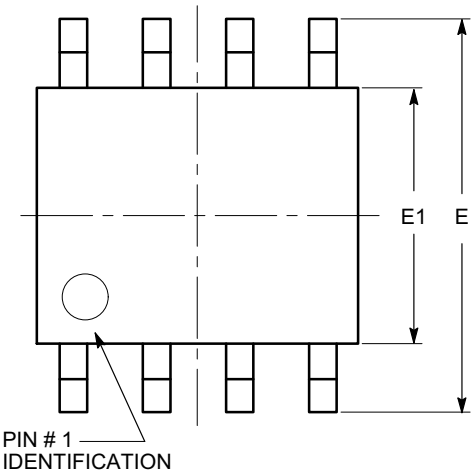

TOP VIEW

SYMBOL	MIN	NOM	MAX
A	1.35		1.75
A1	0.10		0.25
b	0.33		0.51
c	0.19		0.25
D	4.80		5.00
E	5.80		6.20
E1	3.80		4.00
e	1.27 BSC		
h	0.25		0.50
L	0.40		1.27
θ	0º		8º

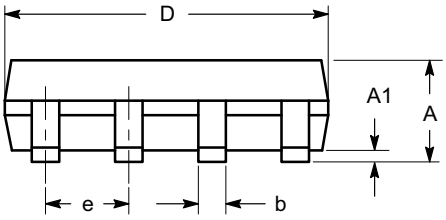

SIDE VIEW

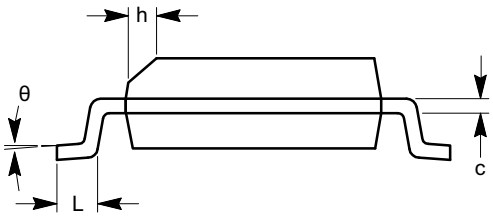

END VIEW

Notes:
(1) All dimensions are in millimeters. Angles in degrees.
(2) Complies with JEDEC MS-012.

DOCUMENT NUMBER:	98AON34272E	Electronic versions are uncontrolled except when accessed directly from the Document Repository. Printed versions are uncontrolled except when stamped "CONTROLLED COPY" in red.
DESCRIPTION:	SOIC−8, 150 MILS	PAGE 1 OF 1

onsemi and onsemi are trademarks of Semiconductor Components Industries, LLC dba **onsemi** or its subsidiaries in the United States and/or other countries. **onsemi** reserves the right to make changes without further notice to any products herein. **onsemi** makes no warranty, representation or guarantee regarding the suitability of its products for any particular purpose, nor does **onsemi** assume any liability arising out of the application or use of any product or circuit, and specifically disclaims any and all liability, including without limitation special, consequential or incidental damages. **onsemi** does not convey any license under its patent rights nor the rights of others.

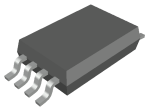

TSSOP8, 4.4x3.0, 0.65P
CASE 948AL
ISSUE A

DATE 20 MAY 2022

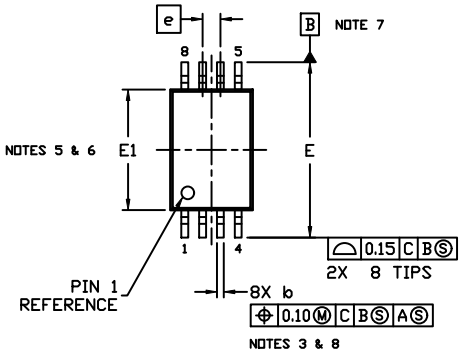

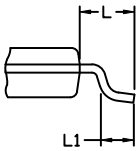

NOTES:

1. DIMENSIONING AND TOLERANCING PER ASME Y14.5, 2009..
2. CONTROLLING DIMENSION: MILLIMETERS
3. DIMENSION b DOES NOT INCLUDE DAMBAR PROTRUSION. ALLOWABLE PROTRUSION SHALL NOT BE 0.15 IN EXCESS OF MAXIMUM MATERIAL CONDITION.
4. DIMENSION D DOES NOT INCLUDE MOLD FLASH, PROTRUSIONS OR GATE BURRS. MOLD FLASH, PROTRUSIONS OR GATE BURRS SHALL NOT EXCEED 0.15 PER SIDE.
5. DIMENSION E1 DOES NOT INCLUDE INTERLEAD FLASH OR PROTRUSION. INTERLEAD FLASH OR PROTRUSION SHALL NOT EXCEED 0.25 PER SIDE.
6. THE PACKAGE TOP MAY BE SMALLER THAN THE PACKAGE BOTTOM. DIMENSIONS D AND E1 ARE DETERMINED AT THE OUTERMOST EXTREMES OF THE PLASTIC BODY AT DATUM PLANE H.
7. DATUMS A AND B ARE TO BE DETERMINED AT DATUM H.
8. DIMENSIONS b AND c APPLY TO THE FLAT SECTION OF THE LEAD BETWEEN 0.10 AND 0.25 FROM THE LEAD TIP..
9. A1 IS DEFINED AS THE LOWEST VERTICAL DISTANCE FROM THE SEATING PLANE TO THE LOWEST POINT ON THE PACKAGE BODY..

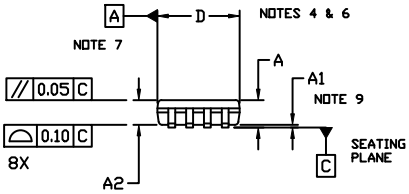

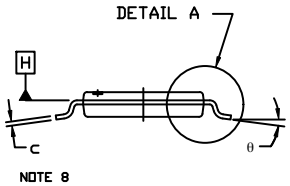

DIM	MILLIMETERS		
	MIN.	NOM.	MAX.
A	---	---	1.20
A1	0.05	---	0.15
A2	0.80	0.90	1.05
b	0.19	---	0.30
c	0.09	---	0.20
D	2.90	3.00	3.10
E	6.30	6.40	6.50
E1	4.30	4.40	4.50
e	0.65 BSC		
L	1.00 REF		
L1	0.50	0.60	0.70
θ	0°	---	8°

GENERIC
MARKING DIAGRAM*

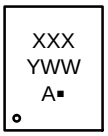

XXX = Specific Device Code
Y = Year
WW = Work Week
A = Assembly Location
▪ = Pb−Free Package

*This information is generic. Please refer to device data sheet for actual part marking. Pb−Free indicator, “G” or microdot “▪”, may or may not be present. Some products may not follow the Generic Marking.

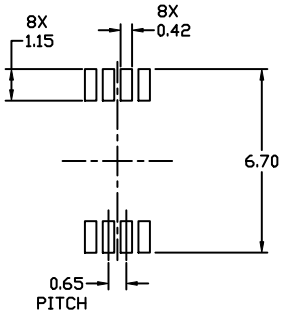

RECOMMENDED
MOUNTING FOOTPRINT*

* For additional information on our Pb-Free strategy and soldering details, please download the ON Semiconductor Soldering and Mounting Techniques Reference Manual, SOLDERRM/D.

DOCUMENT NUMBER:	**98AON34428E**	Electronic versions are uncontrolled except when accessed directly from the Document Repository. Printed versions are uncontrolled except when stamped “CONTROLLED COPY” in red.
DESCRIPTION:	**TSSOP8, 4.4X3.0, 0.65P**	**PAGE 1 OF 1**

onsemi and onsemi are trademarks of Semiconductor Components Industries, LLC dba **onsemi** or its subsidiaries in the United States and/or other countries. **onsemi** reserves the right to make changes without further notice to any products herein. **onsemi** makes no warranty, representation or guarantee regarding the suitability of its products for any particular purpose, nor does **onsemi** assume any liability arising out of the application or use of any product or circuit, and specifically disclaims any and all liability, including without limitation special, consequential or incidental damages. **onsemi** does not convey any license under its patent rights nor the rights of others.

onsemi, onsemi, and other names, marks, and brands are registered and/or common law trademarks of Semiconductor Components Industries, LLC dba "**onsemi**" or its affiliates and/or subsidiaries in the United States and/or other countries. **onsemi** owns the rights to a number of patents, trademarks, copyrights, trade secrets, and other intellectual property. A listing of **onsemi**'s product/patent coverage may be accessed at www.onsemi.com/site/pdf/Patent−Marking.pdf. **onsemi** reserves the right to make changes at any time to any products or information herein, without notice. The information herein is provided "as−is" and **onsemi** makes no warranty, representation or guarantee regarding the accuracy of the information, product features, availability, functionality, or suitability of its products for any particular purpose, nor does **onsemi** assume any liability arising out of the application or use of any product or circuit, and specifically disclaims any and all liability, including without limitation special, consequential or incidental damages. Buyer is responsible for its products and applications using **onsemi** products, including compliance with all laws, regulations and safety requirements or standards, regardless of any support or applications information provided by **onsemi**. "Typical" parameters which may be provided in **onsemi** data sheets and/or specifications can and do vary in different applications and actual performance may vary over time. All operating parameters, including "Typicals" must be validated for each customer application by customer's technical experts. **onsemi** does not convey any license under any of its intellectual property rights nor the rights of others. **onsemi** products are not designed, intended, or authorized for use as a critical component in life support systems or any FDA Class 3 medical devices or medical devices with a same or similar classification in a foreign jurisdiction or any devices intended for implantation in the human body. Should Buyer purchase or use **onsemi** products for any such unintended or unauthorized application, Buyer shall indemnify and hold **onsemi** and its officers, employees, subsidiaries, affiliates, and distributors harmless against all claims, costs, damages, and expenses, and reasonable attorney fees arising out of, directly or indirectly, any claim of personal injury or death associated with such unintended or unauthorized use, even if such claim alleges that **onsemi** was negligent regarding the design or manufacture of the part. **onsemi** is an Equal Opportunity/Affirmative Action Employer. This literature is subject to all applicable copyright laws and is not for resale in any manner.

ADDITIONAL INFORMATION

TECHNICAL PUBLICATIONS:
Technical Library: www.onsemi.com/design/resources/technical−documentation
onsemi Website: www.onsemi.com

ONLINE SUPPORT: www.onsemi.com/support
For additional information, please contact your local Sales Representative at
www.onsemi.com/support/sales