Thank you for your interest in **onsemi** products.

Your technical document begins on the following pages.

Your Feedback is Important to Us!

Please take a moment to participate in our short survey.
At **onsemi**, we are dedicated to delivering technical content that best meets your needs.

Help Us Improve – Take the Survey

This survey is intended to collect your feedback, capture any issues you may encounter, and to provide improvements you would like to suggest.

We look forward to your feedback.

To learn more about **onsemi**, please visit our website at
www.onsemi.com

onsemi and onsemi and other names, marks, and brands are registered and/or common law trademarks of Semiconductor Components Industries, LLC dba "**onsemi**" or its affiliates and/or subsidiaries in the United States and/or other countries. **onsemi** owns the rights to a number of patents, trademarks, copyrights, trade secrets, and other intellectual property. A listing of **onsemi** product/patent coverage may be accessed at www.onsemi.com/site/pdf/Patent-Marking.pdf. **onsemi** reserves the right to make changes at any time to any products or information herein, without notice. The information herein is provided "as-is" and **onsemi** makes no warranty, representation or guarantee regarding the accuracy of the information, product features, availability, functionality, or suitability of its products for any particular purpose, nor does **onsemi** assume any liability arising out of the application or use of any product or circuit, and specifically disclaims any and all liability, including without limitation special, consequential or incidental damages. Buyer is responsible for its products and applications using **onsemi** products, including compliance with all laws, regulations and safety requirements or standards, regardless of any support or applications information provided by **onsemi**. "Typical" parameters which may be provided in **onsemi** data sheets and/or specifications can and do vary in different applications and actual performance may vary over time. All operating parameters, including "Typicals" must be validated for each customer application by customer's technical experts. **onsemi** does not convey any license under any of its intellectual property rights nor the rights of others. **onsemi** products are not designed, intended, or authorized for use as a critical component in life support systems or any FDA Class 3 medical devices or medical devices with a same or similar classification in a foreign jurisdiction or any devices intended for implantation in the human body. Should Buyer purchase or use **onsemi** products for any such unintended or unauthorized application, Buyer shall indemnify and hold **onsemi** and its officers, employees, subsidiaries, affiliates, and distributors harmless against all claims, costs, damages, and expenses, and reasonable attorney fees arising out of, directly or indirectly, any claim of personal injury or death associated with such unintended or unauthorized use, even if such claim alleges that **onsemi** was negligent regarding the design or manufacture of the part. **onsemi** is an Equal Opportunity/Affirmative Action Employer. This literature is subject to all applicable copyright laws and is not for resale in any manner. Other names and brands may be claimed as the property of others.

EEPROM Serial 32-Kb I²C in a 4-ball WLCSP

CAT24C32BC4, CAT24C32BAC4

WLCSP−4
C4C SUFFIX
CASE 567JY

Description

The CAT24C32BC4 and CAT24C32BAC4 are EEPROM Serial 32−Kb I²C devices available in a 4−ball WLCSP package. Both devices are internally organized as 4096 words of 8 bits each.

They feature a 32−byte page write buffer and support the Standard (100 kHz), Fast (400 kHz) and Fast−Plus (1 MHz) I²C protocol.

The CAT24C32BC4 and CAT24C32BAC4 respond to a different Slave Address and are therefore suitable in applications that require two serial EEPROM devices with 4−ball WLCSP on the same I²C bus.

Features

- Supports Standard, Fast and Fast−Plus I²C Protocol
- 1.7 V to 5.5 V Supply Voltage Range
- 32−Byte Page Write Buffer
- Hardware Write Protection for Entire Memory
- Schmitt Triggers and Noise Suppression Filters on I²C Bus Inputs (SCL and SDA)
- Low Power CMOS Technology
- 1,000,000 Program/Erase Cycles
- 100 Year Data Retention
- Industrial Temperature Range
- 4−ball WLCSP Package
- This Device is Pb−Free, Halogen Free/BFR Free, and RoHS Compliant

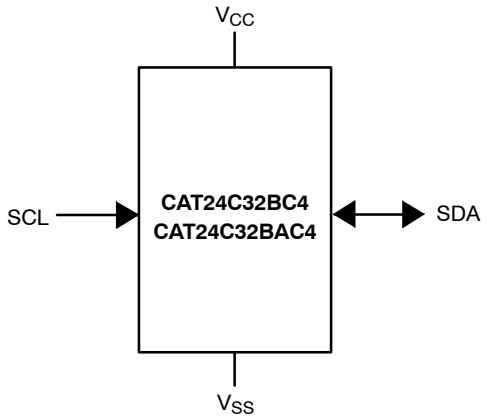

Figure 1. Functional Symbol

PIN CONFIGURATION (Top View)

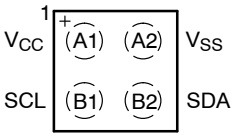

WLCSP (C4C)

MARKING DIAGRAM

X = Specific Device Code
B: CAT24C32BC4
J: CAT24C32BAC4
Y = Production Year (Last Digit)
M = Production Month (1−9, O, N, D)

For the location of Pin 1, please consult the corresponding package drawing.

PIN FUNCTION

Pin Name	Function
SDA	Serial Data
SCL	Serial Clock
V_{CC}	Power Supply
V_{SS}	Ground

ORDERING INFORMATION

See detailed ordering and shipping information on page 8 of this data sheet.

© Semiconductor Components Industries, LLC, 2016

Table 1. ABSOLUTE MAXIMUM RATINGS

Parameters	Ratings	Units
Storage Temperature	–65 to +150	°C
Voltage on Any Pin with Respect to Ground (Note 1)	–0.5 to +6.5	V

Stresses exceeding those listed in the Maximum Ratings table may damage the device. If any of these limits are exceeded, device functionality should not be assumed, damage may occur and reliability may be affected.

1. The DC input voltage on any pin should not be lower than −0.5 V or higher than V_{CC} + 0.5 V. During transitions, the voltage on any pin may undershoot to no less than −1.5 V or overshoot to no more than V_{CC} + 1.5 V, for periods of less than 20 ns.

Table 2. RELIABILITY CHARACTERISTICS (Note 2)

Symbol	Parameter	Min	Units
N_{END} (Note 3)	Endurance	1,000,000	Program/Erase Cycles
T_{DR}	Data Retention	100	Years

2. These parameters are tested initially and after a design or process change that affects the parameter according to appropriate AEC−Q100 and JEDEC test methods.
3. Page Mode, V_{CC} = 5 V, 25°C.

Table 3. D.C. OPERATING CHARACTERISTICS (V_{CC} = 1.7 V to 5.5 V, T_A = −40°C to +85°C, unless otherwise specified.)

Symbol	Parameter	Test Conditions	Min	Max	Units
I_{CCR}	Read Current	Read, f_{SCL} = 1 MHz		0.4	mA
I_{CCW}	Write Current	Write		0.6	mA
I_{SB}	Standby Current	All I/O Pins at GND or V_{CC}		1	μA
I_L	I/O Pin Leakage	Pin at GND or V_{CC}		2	μA
V_{IL}	Input Low Voltage	$V_{CC} \geq 2.2$ V	−0.5	V_{CC} x 0.3	V
		$V_{CC} < 2.2$ V	−0.5	V_{CC} x 0.25	V
V_{IH}	Input High Voltage	$V_{CC} \geq 2.2$ V	V_{CC} x 0.7	V_{CC} + 0.5	V
		$V_{CC} < 2.2$ V	V_{CC} x 0.75	V_{CC} + 0.5	V
V_{OL}	Output Low Voltage	$V_{CC} \geq 2.2$ V, I_{OL} = 3.0 mA		0.4	V
		$V_{CC} < 2.2$ V, I_{OL} = 1.0 mA		0.2	V

Table 4. PIN IMPEDANCE CHARACTERISTICS (V_{CC} = 1.7 V to 5.5 V, T_A = −40°C to +85°C, unless otherwise specified.)

Symbol	Parameter	Conditions	Max	Units
C_{IN} (Note 4)	SDA I/O Pin Capacitance	V_{IN} = 0 V	8	pF
C_{IN} (Note 4)	Input Capacitance (other pins)	V_{IN} = 0 V	6	pF

4. These parameters are tested initially and after a design or process change that affects the parameter according to appropriate AEC−Q100 and JEDEC test methods.

Table 5. A.C. CHARACTERISTICS (V_{CC} = 1.7 V to 5.5 V, T_A = −40°C to +85°C) (Note 5)

Symbol	Parameter	Standard		Fast		Fast−Plus		Units
		Min	Max	Min	Max	Min	Max	
F_{SCL}	Clock Frequency		100		400		1,000	kHz
$t_{HD:STA}$	START Condition Hold Time	4		0.6		0.25		μs
t_{LOW}	Low Period of SCL Clock	4.7		1.3		0.45		μs
t_{HIGH}	High Period of SCL Clock	4		0.6		0.35		μs
$t_{SU:STA}$	START Condition Setup Time	4.7		0.6		0.25		μs
$t_{HD:DAT}$	Data In Hold Time	0		0		0		μs
$t_{SU:DAT}$	Data In Setup Time	250		100		50		ns
t_R (Note 6)	SDA and SCL Rise Time		1,000		300		100	ns
t_F (Note 6)	SDA and SCL Fall Time		300		300		100	ns
$t_{SU:STO}$	STOP Condition Setup Time	4		0.6		0.25		μs
t_{BUF}	Bus Free Time Between STOP and START	4.7		1.3		0.5		μs
t_{AA}	SCL Low to Data Out Valid		3.5		0.9		0.40	μs
t_{DH} (Note 6)	Data Out Hold Time	100		100		50		ns
T_i (Note 6)	Noise Pulse Filtered at SCL and SDA Inputs		50		50		50	ns
t_{WR}	Write Cycle Time		4		4		4	ms
t_{PU} (Notes 6, 7)	Power−up to Ready Mode		0.35		0.35		0.35	ms

Product parametric performance is indicated in the Electrical Characteristics for the listed test conditions, unless otherwise noted. Product performance may not be indicated by the Electrical Characteristics if operated under different conditions.

5. Test conditions according to “A.C. Test Conditions” table.
6. Tested initially and after a design or process change that affects this parameter.
7. t_{PU} is the delay between the time V_{CC} is stable and the device is ready to accept commands.

Table 6. A.C. TEST CONDITIONS

Input Levels	$V_{CC} \geq 2.2$ V: 0.2 x V_{CC} to 0.8 x V_{CC} $V_{CC} < 2.2$ V: 0.15 x V_{CC} to 0.85 x V_{CC}
Input Rise and Fall Times	≤ 50 ns
Input Reference Levels	0.3 x V_{CC}, 0.7 x V_{CC}
Output Reference Levels	0.3 x V_{CC}, 0.7 x V_{CC}
Output Load	Current Source: I_{OL} = 3 mA ($V_{CC} \geq 2.2$ V); I_{OL} = 1 mA ($V_{CC} < 2.2$ V); C_L = 100 pF

POWER−ON RESET (POR)

Each CAT24C32BC4/CAT24C32BAC4 incorporates Power−On Reset (POR) circuitry which protects the internal logic against powering up in the wrong state. The device will power up into Standby mode after V_{CC} exceeds the POR trigger level and will power down into Reset mode when V_{CC} drops below the POR trigger level. This bi−directional POR behavior protects the device against 'brown−out' failure following a temporary loss of power.

PIN DESCRIPTION

SCL: The Serial Clock input pin accepts the clock signal generated by the Master.

SDA: The Serial Data I/O pin accepts input data and delivers output data. In transmit mode, this pin is open drain. Data is acquired on the positive edge, and is delivered on the negative edge of SCL.

FUNCTIONAL DESCRIPTION

The CAT24C32BC4/CAT24C32BAC4 supports the Inter−Integrated Circuit (I^2C) Bus protocol. The protocol relies on the use of a Master device, which provides the clock and directs bus traffic, and Slave devices which execute requests. The CAT24C32BC4/CAT24C32BAC4 operates as a Slave device. Both Master and Slave can transmit or receive, but only the Master can assign those roles.

I^2C Bus Protocol

The 2−wire I^2C bus consists of two lines, SCL and SDA, connected to the V_{CC} supply via pull−up resistors. The Master provides the clock to the SCL line, and either the Master or the Slaves drive the SDA line. A '0' is transmitted by pulling a line LOW and a '1' by letting it stay HIGH. Data transfer may be initiated only when the bus is not busy (see A.C. Characteristics). During data transfer, SDA must remain stable while SCL is HIGH.

START/STOP Condition

An SDA transition while SCL is HIGH creates a START or STOP condition (Figure 2). The START consists of a HIGH to LOW SDA transition, while SCL is HIGH. Absent the START, a Slave will not respond to the Master. The STOP completes all commands, and consists of a LOW to HIGH SDA transition, while SCL is HIGH.

Device Addressing

The Master addresses a Slave by creating a START condition and then broadcasting an 8−bit Slave address (Figure 3). The first 4 bits of the Slave address are set to 1010. The next 3 bits are set to 0 0 0 (CAT24C32BC4) or to 1 0 0 (CAT24C32BAC4). The last bit, R/W, specifies whether a Read (1) or Write (0) operation is to be performed.

Acknowledge

During the 9th clock cycle following every byte sent to the bus, the transmitter releases the SDA line, allowing the receiver to respond. The receiver then either acknowledges (ACK) by pulling SDA LOW, or does not acknowledge (NoACK) by letting SDA stay HIGH (Figure 4). Bus timing is illustrated in Figure 5.

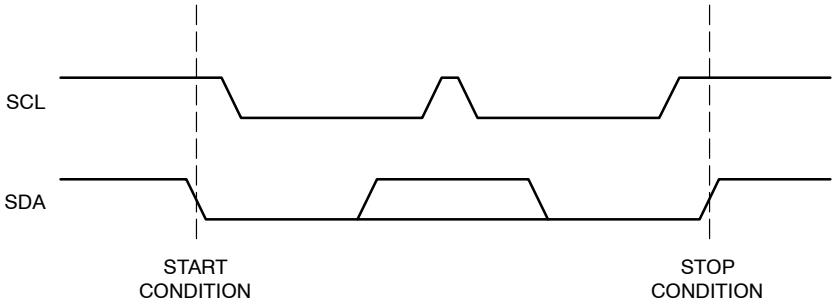

Figure 2. Start/Stop Timing

1	0	1	0	0	0	0	R/$\overline{W}$	**CAT24C32BC4**
1	0	1	0	1	0	0	R/$\overline{W}$	**CAT24C32BAC4**

Figure 3. Slave Address Bits

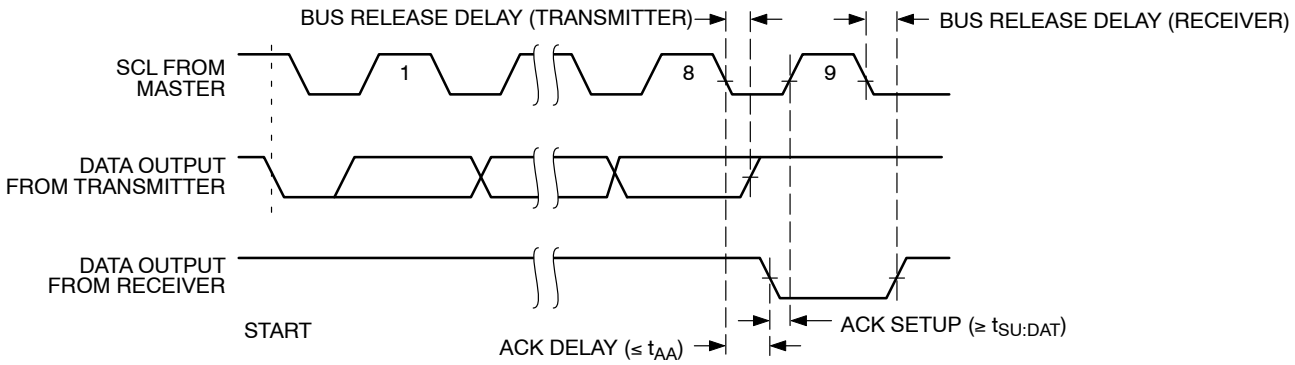

Figure 4. Acknowledge Timing

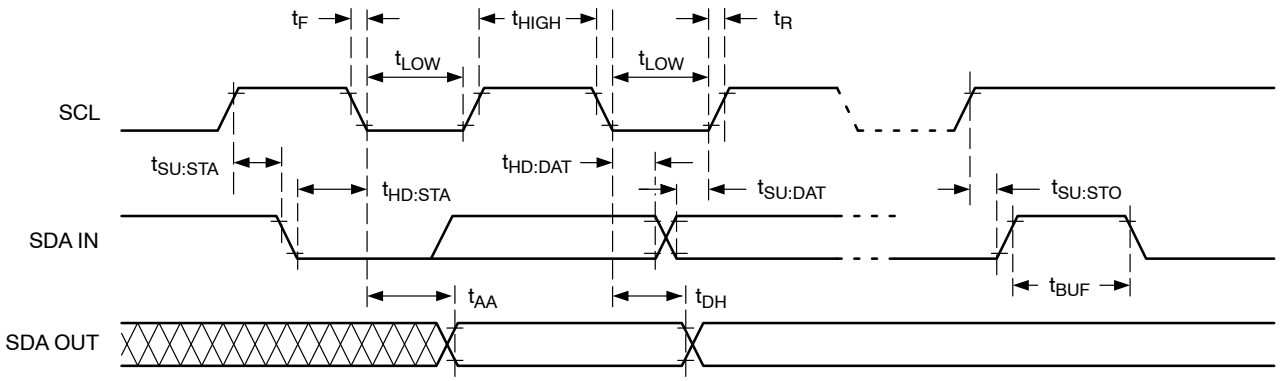

Figure 5. Bus Timing

WRITE OPERATIONS

Byte Write

To write data to memory, the Master creates a START condition on the bus and then broadcasts a Slave address with the R/$\overline{W}$ bit set to ‘0’. The Master then sends two address bytes and a data byte and concludes the session by creating a STOP condition on the bus. The Slave responds with ACK after every byte sent by the Master (Figure 6). The STOP starts the internal Write cycle, and while this operation is in progress (t_{WR}), the SDA output is tri−stated and the Slave does not acknowledge the Master (Figure 7).

Page Write

The Byte Write operation can be expanded to Page Write, by sending more than one data byte to the Slave before issuing the STOP condition (Figure 8). Up to 32 distinct data bytes can be loaded into the internal Page Write Buffer starting at the address provided by the Master. The page address is latched, and as long as the Master keeps sending data, the internal byte address is incremented up to the end of page, where it then wraps around (within the page). New data can therefore replace data loaded earlier. Following the STOP, data loaded during the Page Write session will be written to memory in a single internal Write cycle (t_{WR}).

Acknowledge Polling

As soon (and as long) as internal Write is in progress, the Slave will not acknowledge the Master. This feature enables the Master to immediately follow−up with a new Read or Write request, rather than wait for the maximum specified Write time (t_{WR}) to elapse. Upon receiving a NoACK response from the Slave, the Master simply repeats the request until the Slave responds with ACK.

Delivery State

The CAT24C32BC4/CAT24C32BAC4 is shipped erased, i.e., all bytes are FFh.

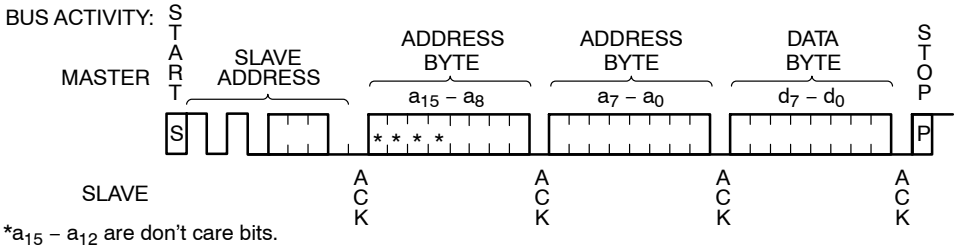

Figure 6. Byte Write Sequence

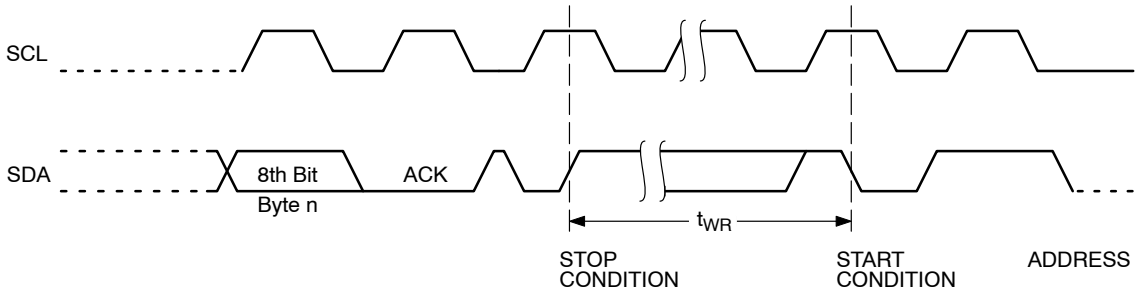

Figure 7. Write Cycle Timing

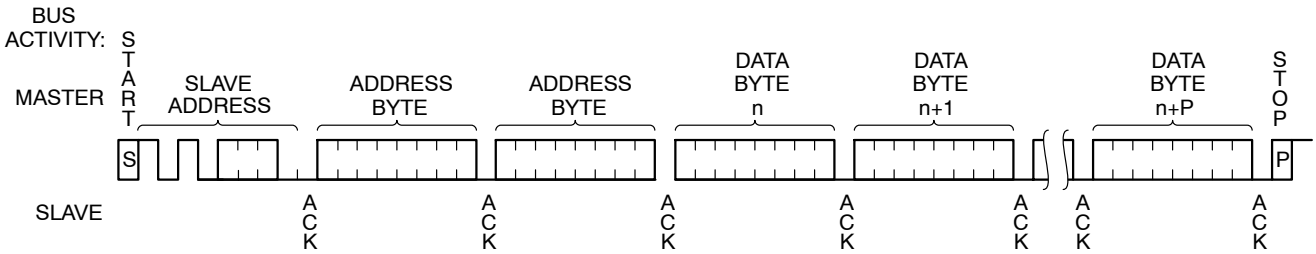

Figure 8. Page Write Sequence

READ OPERATIONS

Immediate Read

To read data from memory, the Master creates a START condition on the bus and then broadcasts a Slave address with the R/$\overline{W}$ bit set to ‘1’. The Slave responds with ACK and starts shifting out data residing at the current address. After receiving the data, the Master responds with NoACK and terminates the session by creating a STOP condition on the bus (Figure 9). The Slave then returns to Standby mode.

Selective Read

To read data residing at a specific address, the selected address must first be loaded into the internal address register. This is done by starting a Byte Write sequence, whereby the Master creates a START condition, then broadcasts a Slave address with the R/$\overline{W}$ bit set to ‘0’ and then sends two address bytes to the Slave. Rather than completing the Byte Write sequence by sending data, the Master then creates a START condition and broadcasts a Slave address with the R/$\overline{W}$ bit set to ‘1’. The Slave responds with ACK after every byte sent by the Master and then sends out data residing at the selected address. After receiving the data, the Master responds with NoACK and then terminates the session by creating a STOP condition on the bus (Figure 10).

Sequential Read

If, after receiving data sent by the Slave, the Master responds with ACK, then the Slave will continue transmitting until the Master responds with NoACK followed by STOP (Figure 11). During Sequential Read the internal byte address is automatically incremented up to the end of memory, where it then wraps around to the beginning of memory.

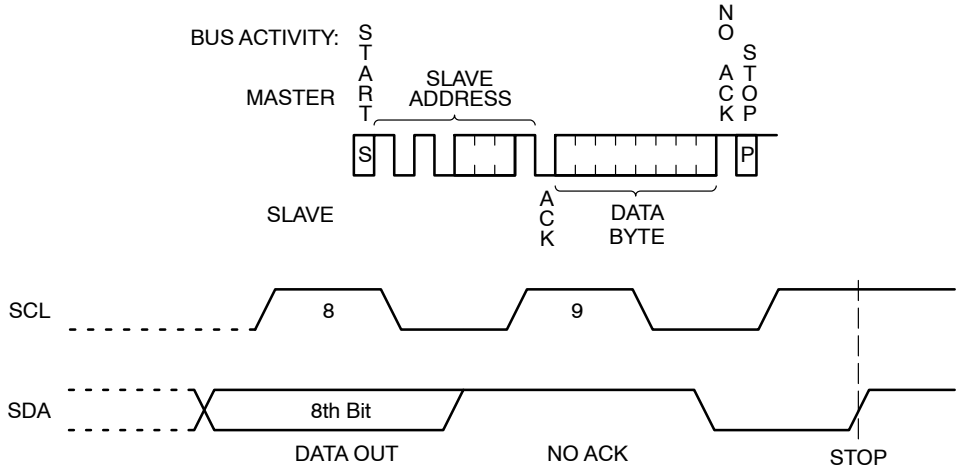

Figure 9. Immediate Read Sequence and Timing

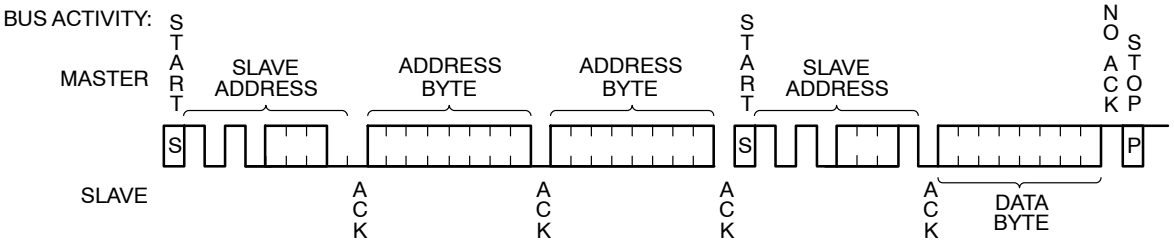

Figure 10. Selective Read Sequence

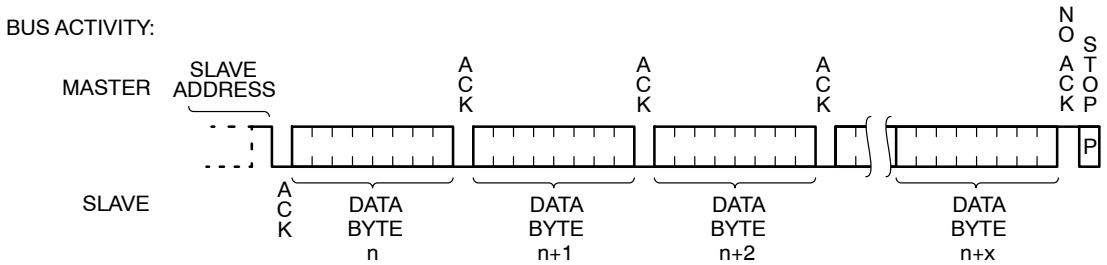

Figure 11. Sequential Read Sequence

ORDERING INFORMATION

Device Order Number	Specific Device Marking	Package Type	Temperature Range	Lead Finish	Shipping†
CAT24C32BC4CTR	B	WLCSP−4 with Die Coat	I = Industrial (−40°C to +85°C)	SnAg	Tape & Reel, 5,000 Units / Reel
CAT24C32BAC4CTR (Note 9)	J	WLCSP−4 with Die Coat	I = Industrial (−40°C to +85°C)	SnAg	Tape & Reel, 5,000 Units / Reel

†For information on tape and reel specifications, including part orientation and tape sizes, please refer to our Tape and Reel Packaging Specifications Brochure, BRD8011/D.

8. All packages are RoHS−compliant (Lead−free, Halogen−free).
9. This WLCSP−4 option responds to a different Slave Address compared to CAT24C32BC4CTR.
10. **Caution: The EEPROM devices delivered in WLCSP must never be exposed to ultra violet light. When exposed to ultra violet light the EEPROM cells lose their stored data.**

onsemi is licensed by the Philips Corporation to carry the I^2C bus protocol.

WLCSP4, 0.77x0.77
CASE 567JY
ISSUE C

SCALE 4:1

DATE 07 MAR 2017

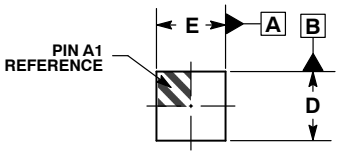

TOP VIEW

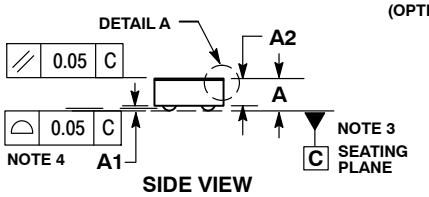

SIDE VIEW

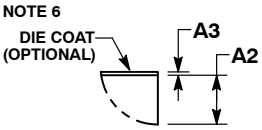

DETAIL A

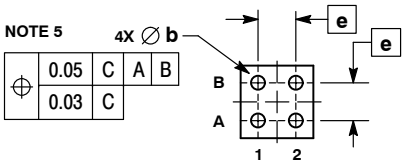

BOTTOM VIEW

NOTES:
1. DIMENSIONING AND TOLERANCING PER ASME Y14.5M, 1994.
2. CONTROLLING DIMENSION: MILLIMETERS.
3. DATUM C, THE SEATING PLANE, IS DEFINED BY THE SPHERICAL CROWNS OF THE SOLDER BALLS.
4. COPLANARITY APPLIES TO SPHERICAL CROWNS OF THE SOLDER BALLS.
5. DIMENSION b IS MEASURED AT THE MAXIMUM CONTACT BALL DIAMETER PARALLEL TO DATUM C.
6. BACKSIDE COATING IS OPTIONAL.

	MILLIMETERS		
DIM	MIN	NOM	MAX
A	---	---	0.35
A1	0.04	0.06	0.08
A2	0.23 REF		
A3	0.025 REF		
b	0.15	0.155	0.16
D	0.75	0.77	0.79
E	0.75	0.77	0.79
e	0.40 BSC		

GENERIC MARKING DIAGRAM*

X = Specific Device Code
Y = Year
W = Work Week

*This information is generic. Please refer to device data sheet for actual part marking. Pb−Free indicator, “G” or microdot “ ▪”, may or may not be present.

RECOMMENDED SOLDERING FOOTPRINT*

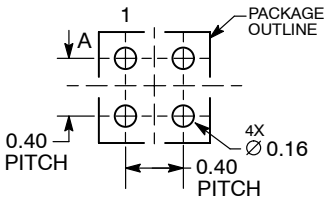

DIMENSIONS: MILLIMETERS

*For additional information on our Pb−Free strategy and soldering details, please download the ON Semiconductor Soldering and Mounting Techniques Reference Manual, SOLDERRM/D.

DOCUMENT NUMBER:	98AON85186F	Electronic versions are uncontrolled except when accessed directly from the Document Repository. Printed versions are uncontrolled except when stamped “CONTROLLED COPY” in red.
DESCRIPTION:	WLCSP4, 0.77X0.77	PAGE 1 OF 1

onsemi and onsemi are trademarks of Semiconductor Components Industries, LLC dba **onsemi** or its subsidiaries in the United States and/or other countries. **onsemi** reserves the right to make changes without further notice to any products herein. **onsemi** makes no warranty, representation or guarantee regarding the suitability of its products for any particular purpose, nor does **onsemi** assume any liability arising out of the application or use of any product or circuit, and specifically disclaims any and all liability, including without limitation special, consequential or incidental damages. **onsemi** does not convey any license under its patent rights nor the rights of others.

onsemi, onsemi, and other names, marks, and brands are registered and/or common law trademarks of Semiconductor Components Industries, LLC dba "**onsemi**" or its affiliates and/or subsidiaries in the United States and/or other countries. **onsemi** owns the rights to a number of patents, trademarks, copyrights, trade secrets, and other intellectual property. A listing of **onsemi**'s product/patent coverage may be accessed at www.onsemi.com/site/pdf/Patent−Marking.pdf. **onsemi** reserves the right to make changes at any time to any products or information herein, without notice. The information herein is provided "as−is" and **onsemi** makes no warranty, representation or guarantee regarding the accuracy of the information, product features, availability, functionality, or suitability of its products for any particular purpose, nor does **onsemi** assume any liability arising out of the application or use of any product or circuit, and specifically disclaims any and all liability, including without limitation special, consequential or incidental damages. Buyer is responsible for its products and applications using **onsemi** products, including compliance with all laws, regulations and safety requirements or standards, regardless of any support or applications information provided by **onsemi**. "Typical" parameters which may be provided in **onsemi** data sheets and/or specifications can and do vary in different applications and actual performance may vary over time. All operating parameters, including "Typicals" must be validated for each customer application by customer's technical experts. **onsemi** does not convey any license under any of its intellectual property rights nor the rights of others. **onsemi** products are not designed, intended, or authorized for use as a critical component in life support systems or any FDA Class 3 medical devices or medical devices with a same or similar classification in a foreign jurisdiction or any devices intended for implantation in the human body. Should Buyer purchase or use **onsemi** products for any such unintended or unauthorized application, Buyer shall indemnify and hold **onsemi** and its officers, employees, subsidiaries, affiliates, and distributors harmless against all claims, costs, damages, and expenses, and reasonable attorney fees arising out of, directly or indirectly, any claim of personal injury or death associated with such unintended or unauthorized use, even if such claim alleges that **onsemi** was negligent regarding the design or manufacture of the part. **onsemi** is an Equal Opportunity/Affirmative Action Employer. This literature is subject to all applicable copyright laws and is not for resale in any manner.

ADDITIONAL INFORMATION

TECHNICAL PUBLICATIONS:
Technical Library: www.onsemi.com/design/resources/technical−documentation
onsemi Website: www.onsemi.com

ONLINE SUPPORT: www.onsemi.com/support
For additional information, please contact your local Sales Representative at
www.onsemi.com/support/sales