Product Overview

NCP1015: High Voltage Switching Regulator for Offline SMPS

For complete documentation, see the data sheet

Product Description

The NCP1015 integrates a fixed-frequency current-mode controller and a 700 V voltage MOSFET. Housed in a PDIP7 package, the NCP101X offers everything needed to build a rugged and low-cost power supply, including soft-start, frequency jittering, short-circuit protection, skip-cycle, a maximum peak current setpoint and a Dynamic Self-Supply (no need for an auxiliary winding).
Unlike other monolithic solutions, the NCP1015 is quiet by nature: during nominal load operation, the part switches at one of the available frequencies (65-100 kHz). When the current setpoint falls below a given value, e.g. the output power demand diminishes, the IC automatically enters the so-called skip cycle mode and provides excellent efficiency at light loads. Because this occurs at typically 1/4 of the maximum peak value, no acoustic noise takes place. As a result, standby power is reduced to the minimum without acoustic noise generation.

Features

- Built-in 700 V MOSFET with Typical RdsON of 11 Ohms
- Large Creepage Distance between High-Voltage Pins
- Current-Mode Fixed Frequency Operation: 65kHz - 100kHz
- Skip-Cycle Operation at Low Peak Currents Only: No Acoustic Noise!
- Dynamic Self-Supply, No Need of an Auxiliary Winding
- Internal 1 ms Soft-Start
- Auto-Recovery Internal Output Short-Circuit Protection
- Frequency Jittering for better EMI Signature
- Below 100 mW Standby Power if Auxiliary Winding is Used
- Internal Temperature Shutdown

Applications

- Auxiliary Power Supplies

End Products

- Low Power AC/DC Adapter for Chargers

Part Electrical Specifications

Product	Compliance	Status	Control Mode	f_{SW} Typ (kHz)	f_{Jitter} Typ (%)	Stand-by Mode	$R_{DS(ON)}$ Typ (Ω)	$V_{(BR)DSS}$ Max (V)	I_{Peak} (mA)	HV Start-up Min (V)	DSS (mA)	UVLO	Short Circuit Protection	Over Power Comp.	Brown-out	Latch	Package Type
NCP1015AP065G	Pb-free Halide free	Active	Current Mode	65	Yes	Yes	11	700	450	Yes	8	Yes	Yes	No	No	Yes	PDIP-7
NCP1015AP100G	Pb-free Halide free	Active	Current Mode	100	Yes	Yes	11	700	450	Yes	8	Yes	Yes	No	No	Yes	PDIP-7
NCP1015ST100T3G	Pb-free Halide free	Active	Current Mode	100	Yes	Yes	11	700	450	Yes	8	Yes	Yes	No	No	Yes	SOT-223-4 / TO-261-4
NCP1015ST65T3G	Pb-free Halide free	Active	Current Mode	65	Yes	Yes	11	700	450	Yes	8	Yes	Yes	No	No	Yes	SOT-223-4 / TO-261-4

Application Diagram

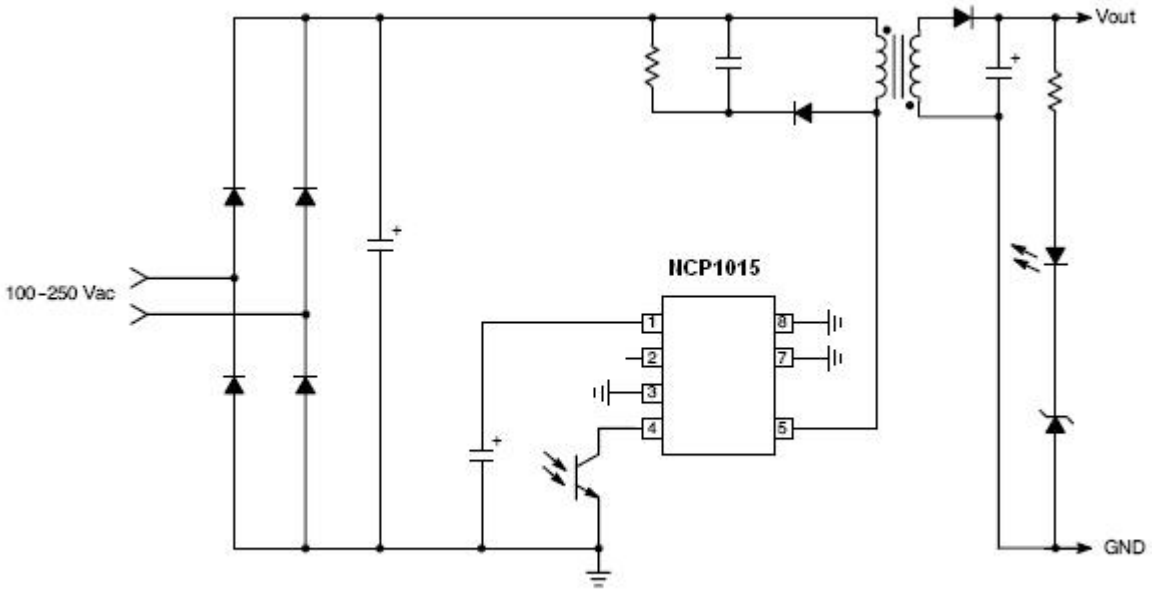

Typical Application Example

For more information please contact your local sales support at www.onsemi.com

Created on: 10/8/2015